CS 68-FP EW30

Cat. nr. **12N**
Art. nr. **PP_AD.089.N12A.00 (v01)**
Edition **06/2021**

Reynaers Aluminium

Together for better

www.reynaers.com

Inhoud
Sommaire
Content
Inhalt

Reynaers Aluminium

Inhoud

Algemene informatie

Algemene informatie systeme

Profielen

Werktekeningen

Montagetekeningen

Toebehoren

INHOUDSTAFEL
TABLE DES MATIERES
TABLE OF CONTENTS
INHALTSANGABE

INHOUDSTAFEL
TABLE DES MATIERES
TABLE OF CONTENTS
INHALTSANGABE

Reynaers Aluminium

Sommaire

Généralités

Généralités séries

Profilés

Coupes et débits

Fabrication et montage

Accessoires

INHOUDSTAFEL
TABLE DES MATIERES
TABLE OF CONTENTS
INHALTSANGABE

Content

General Information

General Information System

Profiles

Work drawings

Assembly drawings

Accessories

INHOUDSTAFEL
TABLE DES MATIERES
TABLE OF CONTENTS
INHALTSANGABE

Inhalt

Allgemeine Information

Allgemeine Information Syste

Profile

Werkzeichnungen

Montagezeichnungen

Zubehör

INHOUDSTAFEL
TABLE DES MATIERES
TABLE OF CONTENTS
INHALTSANGABE

INHOUDSTAFEL
TABLE DES MATIERES
TABLE OF CONTENTS
INHALTSANGABE

INHOUDSTAFEL
TABLE DES MATIERES
TABLE OF CONTENTS
INHALTSANGABE

INHOUDSTAFEL
TABLE DES MATIERES
TABLE OF CONTENTS
INHALTSANGABE

INHOUDSTAFEL
TABLE DES MATIERES
TABLE OF CONTENTS
INHALTSANGABE

A

Reynaers Aluminium

Algemene informatie
Généralités
General Information
Allgemeine Information

SYMBOLENLIJST
LISTE DES SYMBOLES
LIST OF SYMBOLS
ZEICHENERKLAERUNG

Reynaers Aluminium

A

Profiel Profilé Profile Profil	Perfil Profil Profili	
Anodisatie- of lakoppervlakte Surface anodisée ou laquée Anodizing or coating surface Eloxierte oder lackierte Oberfläche	Superficie anodizada o lacada Powierzchnia anodowana lub malowana Superficie anodizzata o verniciata	
Polijstoppervlakte Surface à polir Polishing surface Polieroberfläche	Superficie pulida Powierzchnia polerowana Superficie lucidata	
Lengte Longueur Length Länge	Longitud Dlugosc Lunghezza	
Afmetingen Dimensions Dimensions Abmessungen	Dimensiones Wymiary Dimensioni	
Toepassing Application Application Anwendung	Applicación Zastosowanie Utilizzo	
Bevestigingsmiddelen Moyens de fixation Fixations Befestigungsmittel	Fijación Mocowanie Fissaggio	
Schroeven niet meegeleverd Fourniture sans vis Delivered without screws Lieferung ohne Schrauben	Entregado sin tornillos Dostarczane bez wkretow Consegnato senza viti	
Montagevolgorde Ordre de montage The order of assembly Montagereihenfolge	Orden de montaje Kolejnosc montazu Ordine di montaggio	
Dichtingsmiddel Matière d'étanchéité Sealing agent Abdichtungsmittel	Agente sellante Masa uszczelniajaca Siliconatura	
Verlijmen Coller Glue Verkleben	Collado Klej Colla	
Vulcaniseerlijm Colle vulcanisante Vulcanizing glue Vulkanisierkleber	Vulcanizante Klej wulkanizacyjny Colla vulcanizzante	
Referentiemaat Dimension de référence Reference dimension Referenzmass	Dimension de referencia Punkt odniesienia wymiarowania Dimensioni di riferimento	
Merkteken Marquage Mark Merkzeichen	Indicación Znak Contrassegno	
Struktureel gelijmd glaswerk Vitrage extérieur collé Structural sealing glazing UV-beständiger Scheibenrandverbund	Sellado acristalado estructural Szyba klejona spoiwem konstrukcyjnym Siliconatura vetro strutturale	
Primaire zichtzijde van een profiel Côté visible primaire d'un profilé Primary visible side of a profile Primäre sichtbare Seite eines Profils	Cara vista principal del perfil Glowna widoczna powierzchnia profilu Primo lato visibile di un profilo	
Secundaire zichtzijde van een profiel Côté visible secondaire d'un profilé Secondary visible side of a profile Sekund. sichtbare Seite eines Profils	Cara vista secundaria del perfil Drugorzedna widoczna powierzchnia profilu Secondo lato visibile di un profilo	

Verstek Onglet Mitre Gehrung	Inglete Połaczenie katowe Taglio	
Aantal Nombre Number Anzahl	Número Ilosc Numero	
Zie pagina Voir page See page Siehe Seite	Ver página Patrz strona Vedi pagina	
Type toebehoren Type accessoires Type accessories Typ Zubehör	Tipos de accesorios Rodzaj okuc Tipo di accessorio	
Glasmaten Dimensions vitres Glass sizes Glasmasse	Dimensiones de los vidrios Wymiary szyby Dimensioni del vetro	
Toepassing Application Utilization Anwendung	Applicación Zastosowanie Riferimenti	
Asymmetrisch profiel Profilé asymétrique Asymmetrical profile Asymmetrisches Profil	Perfil asimetrico Profil niesymetryczny Profilo assimmetrico	
Pagina Page Page Seite	Página Strona Pagina	
Laatste editie Dernière édition Last edition Letzte Edition	Edición Poprzednie wydanie Ultima edizione	
Vorige blz Page précédente Previous page Vorige Seite	Página siguiente Poprzednia strona Pagina precedente	
Verstevigingsprofiel Profil de renforcement Reinforcement profile Verstaerkungsprofil	Perfil refuerzo Profil wzmacniajacy Profilo di rinforzo	
Links van buiten gezien Gauche vue exterieur Left seen from outside Links Aussenansicht	Vista izquierda desde el exterior Na lewo widok od zewnątrz Sinistro visto da fuori	
Rechts van buiten gezien Droite vue exterieur Right seen from outside Rechts Aussenansicht	Vista derecha desde el exterior Na prawa widok od zewnątrz Destro visto da fuori	
Reynaprotector Reynaprotector Reynaprotector Reynaprotector	Reynaprotector Reynaprotector Reynaprotector	

Bicolor

Kleur buitenschaal (e) eerst aangeven in geval van bicolor (.69)

En cas de bicolore (.69) il faut indiquer d'abord la couleur du profilé extérieur (e)

For bicolor profiles (.69) first of all one should indicate the colour of the outer profile (e)

Falls zweifarbig (.69) soll man erst die Farbe des Aussenprofils (e) angeben

Para perfil en bicolor (.69) debe indicarse primero el color del perfil externo (e)

Dla profili dwukolorowych (.69) w pierwszej kolejnosci powinnien być wskazany kolor zewnetrznej strony profilu (e)

Nei profili bicolore (.69) prima di tutto indicare il colore del profilo esterno (e)

D0071480

SYMBOLENLIJST
LISTE DES SYMBOLES
LIST OF SYMBOLS
ZEICHENERKLAERUNG

A

	Inbraakwerend Anti-vol Burglar proof Einbruchhemmend	Protección anti-robo Antywlamaniowe Antiscasso
	Basisveiligheid Securité de base Basic safety Basissicherheit	Seguridad básica Antywlamaniowosc podstawowa Antiscasso base
2 EN	Testen uitgevoerd volgens norm EN 1627-1630 Essais effectués par conformément la norme EN 1627-1630 Tests carried out according to standard EN 1627-1630 Einbruchhemmende Prüfungen gemäß Norm EN 1627-1630	Ensayos realizados según norma EN 1627-1630 Badania wykonane wedlug normy EN 1627-1630 Antiscasso secondo EN 1627-1630
2 ENV	Testen uitgevoerd volgens norm DIN V ENV 1627 Essais effectués par conformément la norme DIN V ENV 1627 Tests carried out according to standard DIN V ENV 1627 Einbruchhemmende Prüfungen gemäß Norm DIN V ENV 1627	Ensayos realizados según norma DIN V ENV 1627 Badania wykonane wedlug normy DIN V ENV 1627 Antiscasso secondo DIN V ENV 1627
2 NEN	Testen uitgevoerd volgens norm NEN 5096 + ENV 1627 Essais effectués par conformément la norme NEN 5096 + ENV 1627 Tests carried out according to standard NEN 5096 + ENV 1627 Einbruchhemmende Prüfungen gemäß Norm NEN5096 + ENV1627	Ensayos realizados según norma NEN 5096 + ENV 1627 Badania wykonane norm NEN 5098 + ENV 1627 Antiscasso secondo NEN 5098 + ENV 1627
	Testen uitgevoerd door instituut IBS (Oostenrijk) volgens norm Ö B 3800/3850 Essais effectués par IBS(Autriche) conformément la norme Ö B 3800/3850 Tests carried out by IBS (Austria) according to standard Ö B 3800/3850 Brandschutzprüfungen durchgeführt beim IBS (Österreich) gemäß Norm Ö B 3800/3850	Ensayos hechos por IBS (Austria) según la estandard Ö B 3800/3850 Badania wykonane przez IBS (Austria) wedlug norm Ö B 3800/3850 Testato presso IBS (Austria) IBS secondo Ö B 3800/3850
	Testen uitgevoerd door instituut TNO (Nederland) volgens norm NEN 6069:1997 Essais effectués par TNO (Hollande) conformément la norme NEN 6069:1997 Tests carried out by TNO (The Netherlands) according to standard NEN 6069/1997 Brandschutzprüfungen durchgeführt beim IBS (Österreich) gemäß Norm Ö B 3800/3850	Ensayos realizados fuera por TNO(Holanda) según norma NEN 6069/1977 Badania wykonane przez TNO (Holandia) wedlug norm NEN 6069/1977 Testato presso TNO (Paesi Bassi) secondo NEN 6069/1977
	Brandwerend Anti-feu Fire-proof Feuerhemmend	Resistente al fuego Ognioodporne Anti fuoco
E N E I 60	Testen uitgevoerd volgens norm EN 1634-1(deuren) en EN 1364-1 (beglaasde wanden) Essais effectués par conformément la norme EN 1634-1(portes) et EN 1364-1(parois vitrés) Tests carried out according to standard EN 1634-1(doors) EN 1364-1(glazed partitioning) Prüfungen gemäß Norm EN 1634-1(Türen) und EN 1364-1(verglaste Wände)	Ensayos realizados según norma 1634-1/ EN 1364-1 - Badania wykonane wedlug normy 1634-1 / EN 1364-1 - Antifuoco secondo EN 1634-1 / EN 1364-1 -
E N E I 30		
F	Toebehoren brandwerend Accessoires anti-feu Fire-proof accessories Feuerhemmender Zubehör	Accessorios resistente al fuego Akcesoria ognioodporne Accessori Anti fuoco
	Gelaagd glas Verre feuilleté Laminated glass Verbundglas	Vidrio Laminado Szyba laminiowana Vetro laminato
	Glas Verre Glass Glas	Vidrio Szyba Vetro
	Handleiding Manuel Manual Gebrauchsanweisung	Manual Instrukcja Manuale
! CS 59	Alleen voor CS 59 Seulement pour CS 59 Only for CS 59 Nur für CS 59	Solo para CS 59 Tylko do CS 59 Solo per CS 59
! CS 68	Alleen voor CS 68 Seulement pour CS 68 Only for CS 68 Nur für CS 68	Solo para CS 68 Tylko do CS 68 Solo per CS 8
! CS 77	Alleen voor CS 77 Seulement pour CS 77 Only for CS 77 Nur für CS 77	Solo para CS 77 Tylko do CS 77 Solo per CS 77
	Pershoekverbinding Equerre à sertir Crimp corner cleat Presseckverbinder	Escuadra de ensamblar Naroznik zaciskany Squadrette a cianfrinare
	Hoekverbinding met schroefhoek (*) enkel voor klembaar beslag Equerre à blocage (*) seulement pour accessoires encastrables Corner cleat with screw (*) only for clamping accessories Eckverbinder mit Spannschraube (*) nur für klemmbaren Beschlag	Escuadra de atornillar (*) solo para accesorios apretables Naroznik skrecany (*) tylko dla akcesoriow zatrzaskiwanych Squadrette ad avvitare (*) solo per accessori a scatto
	T-verbinding met schroef Jonction-T avec vis T-bracket with screw T-Verbinder mit Schraube	Tope de union con tornillo Lacznik teowy skrecany Giunti con viti
e	T-verbinding met schroef voor buitendraaiend raam Jonction-T avec vis pour fenêtre ouvrant vers l'ext. T-bracket with screw outside opening window T-Verbinder mit Schraube aussen öffnendes Fenster	Tope Unión con tornillo apertura exterior Lacznik teowy skrecany do okien otwieranych na zewnatrz Cavallotti conuiti ap est.
	Vulhoek Equerre de remplissage Corner support Fülleckwinkel	Escuadra de relleno Wspornik narozny Squadretta di rempirento
	Steunhoek Cale de feuillure Rebate support Glasanschlagwinkel	Escuadra de alineamiento Katowy naroznik Squadrette di allineamento
	Verstelbare schroefhoek Equerre à visser réglable Adjustable screw corner cleat Verstellbarer Schraubeckwinkel	Escuadra de atornillar regulable Katowy naroznik skrecany Squadrette ad avvitare regolabili
	Steunhoeken verstelbaar Cales de feuillure réglables Rebate supports adjustable Verstellbare Eckwinkel Glasanschlag	Escuadra de alineamiento regulable Katowy naroznik nastawny Squadretta di allineamento regolabile
	Hoekverbinding met nagel Equerre avec cheville Corner cleat with drive pin Eckverbinder mit Stift	Escuadra con clavia Lacznik narozny sworzniowy Squadretta a spinare
	T-verbinding met nagel Jonction-T avec cheville T-bracket with drive pin T-Verbinder mit Stift	Tope de union con clavia Lacznik teowy sworzniowy Cavallotto a spinare
e	T-verbinding met nagel voor buitendraaiend raam Jonction-T avec cheville pour fenêtre ouvrant vers l'ext. T-bracket with drive pin outward opening window T-Verbinder mit Stift nach aussen öffnendes Fenster	Tope unión con clavia apertura exterior Lacznik teowy sworzniowy do okien otwieranych na zewnatrz Cavallotto a spinare ap. est.
	Verstelbare T-verbinding Jonction-T réglable Adjustable T-bracket Verstellbarer T-Verbinder	Union T regulable Lacznik teowy nastawny Giunti a T regolabili
	Kruisverbindingen Jonctions transversales Cross connections Kreuzverbindungen	Uniones transversales Polaczenie krzyzowe Collegamento a croce
	Kruisverbinding met schroef Jonction transversale avec vis Cross connection with screw Kreuzverbindung mit Schraube	Union transversal con tornillo Polaczenie krzyzowe skrecane Collegamento a croce con viti
	Bevestiging drager Fixation chevon Fixation rafter Beferstigung Dachsparren	Fijacion mainel Mocowanie krokwi Fissaggio montante

D0071481

SYMBOLENLIJST
LISTE DES SYMBOLES
LIST OF SYMBOLS
ZEICHENERKLAERUNG

Reynaers Aluminium

A

	Eénpuntsluiting Fermeture à 1 point 1-Point lock Einfachverriegelung	Cerradura de 1 punto Zamek 1-punktowy Serratura a 1 punto di chiusura
1	Eénpuntsluiting met dagschieter Fermeture à 1 point à pêne 1-Point lock with latch Einfachverriegelung mit Falle	Cerradura 1 punto golpe Zamek 1-punktowy Serratura a 1 punto di chiusura con scrocco
1 ●	Eénpuntsluiting met rol Fermeture à 1 points à rouleau 1-Point lock with roller Einfachverriegelung mit Rolle	Cerradura de 1 punto con rodillo Zamek 1-punktowy z barylka Serratura a 1 punto di chiusura con rullino
1	Haakslot Serrure à crochet Hook lock Hakenschloss	Cerradura gancho Zamek hakowy Serratura a gancio
2	Tweepuntsluiting Fermeture à 2 points 2-Point lock Zweifachverriegelung	Cerradura de 2 puntos Zamek 2-punktowy Serratura a 2 punti di chiusura
3	Driepuntsluiting Fermeture à 3 points 3-Point lock Dreifachverriegelung	Cerradura de 3 puntos Zamek 3-punktowy Serratura a 3 punti di chiusura
3 ●	Driepuntsluiting met rol Fermeture à 3 points à rouleau 3-Point lock with roller Dreifachverriegelung mit Rolle	Cerradura de 3 puntos con rodillo Zamek 3-punktowy z barylka Serratura a 3 punti di chiusura con rullino
4	Vierpuntsluiting Fermeture à 4 points 4-Point lock Vierfachverriegelung	Cerradura de 4 puntos Zamek 4-punktowy Serratura a 4 punti di chiusura
5	Vijfpuntsluiting Fermeture à 5 points 5-Point lock Fünffachverriegelung	Cerradura de 5 puntos Zamek 5-punktowy Serratura a 5 punti di chiusura
5 ●	Vijfpuntsluiting met rol Fermeture à 5 points à rouleau 5-Point lock with roller Fünffachverriegelung mit Rolle	Cerradura de 5 puntos con rodillo Zamek 5-punktowy z barylka Serratura a 5 punti di chiusura con rullino
6	Zespuntsluiting Fermeture à 6 points 6-Point lock Sechsfachverriegelung	Cerradura de 6 puntos Zamek 6-punktowy Serratura a 6 punti di chiusura
7	Zevenpuntsluiting Fermeture à 7 points 7-Point lock Siebenfachverriegelung	Cerradura de 7 puntos Zamek 7-punktowy Serratura a 7 punti di chiusura
	Espagnoletslot Fermeture espagnolette Espagnolette Lock Treibriegelverschluss	Cierre ventana Zamek drzwiowy do blokady pionowej Serratura a spagnoletta
	Cilinders Cylindres Cylinders Zylinder	Bombines Cylindry Cilindri
	Cilinderplaten Ecussons Cylinder covers PZ-Rosette	Escudos bombin Oslona wkladki bebenkowej Copertura cilindri
	Slotpaden Gâches Receivers Schliessbleche	Gancho Gniazdo rygla zamka Riscontri
	Deursluiters Ferme-porte Door closer Türschliesser	Cierrapuertas Samozamykacz drzwiowy Chijdiporta
(!)	Deursluiters + rem Ferme-porte + frein Door closer + brake Türschliesser + Bremse	Cierrapuertas + freno Samozamykacz drzwiowy + hamulec Chijdiporta + freno

	Elektrische deuropener Gâche pour serrure électrique Electric door opener Elektrischer Türöffner	Portero automatico Elektrorygiel Apertura porta elettrica
	Deurgrendels en kantschuiven Verrous de condamnation portes Flush and door bolts Kantriegel und Türriegel	Pasadores puerta Rygle biernych skrzydel drzwiowych Catenacciolo chiusura centrale
	Geen elektrische spanning bij gesloten deur En cas de porte fermé pas des tension électrique No electric tension in case of closed door Keine elektrische Spannung bei geschlossen Tür	Sin tensión eléctrica en caso de que la puerta esté cerrada Brak elektrycznego napiecia w przypadku zamknietych drzwi Stacco tensione a porta chiusa
	Raampompen Crémones Window handles Handhebel	Cremona Klamka okienna Cremonese
	Deurkrukken Béquilles Door handles Türdrücker	Manubrios Klamka drzwiowa Maniglie
	Sluitingen dubbele deur Serrures pour porte double Locks for double door Türtreibriegel	Cerradura puerta doble Blokada drzwi dwuskrzydlowych Serratura porta a 2 ante
e	Raampomp naar buiten draaiend raam Crémone fenêtre ouvrant vers l'extérieur Handle outward opening window Handhebel nach aussen öffnendes Fenster	Cremona ventana apertura exterior Klamka okna otwieranego na zewnatrz Cremonese apertura est.
	Raamscharnieren Paumelles pour fenêtres Window hinges Fensterbänder	Bisagras ventana Zawias okienny Cerniere
	Deurscharnieren 2-delig Paumelles porte 2-partite Door hinges 2-part Türbänder 2-teilig	Pernio puerta 2 palas Zawias drzwiowy 2-czesciowy Cerniera 2 ali
	Deurscharnieren 3-delig Paumelles porte 3-partite Door hinges 3-part Türbänder 3-teilig	Pernio puerta 3 palas Zawias drzwiowy 3-czesciowy Cerniera 3 ali
	Afstandsbussen Pièces de distance Set of distance bushes Distanzbuchsen	Piezas distanciadoras Tuleje dystansowe Set distanzialli
	Geen afstandsbussen nodig Pas de pièces de distance No distance bushes needed Keine Distanzbuchse	No necesario piezas distanciadoras Brak koniecznosci stosowania tuleji dystansowych Senza distanziali
●	Inbraakwerende kogel Bille anti-vol Anti-burglar ball Einbruchhemmende Kugel	Bola proteccion antirobbo Kulka antywlamaniowa Antiscasso
	Dieveklauw Pene anti-degondage Anti-lift pin Sicherheitsbolzen	Perno antielevador Bolec antywywazeniowy Antisollevarento
	Kozijndorpelveer Pivot de frein aerien Overhead closer Obentürschliesser	Muelle aereo Samozamykacz gorny Chiudi porta sup.
	Vloerveer Pivot de frein au sol Floor closer Bodentürschliesser	Muelle pavimento puerta Samozamykacz podlogowy Chiudi porta inf.

D0071482

SYMBOLENLIJST
LISTE DES SYMBOLES
LIST OF SYMBOLS
ZEICHENERKLAERUNG

Reynaers Aluminium

A

	Eindstuk deurvleugel Pièce finale ouvr. porte End piece door vent Endkappe Türflügel	Tapeta hoja puerta Koncowka do skrzydla drzwiowego Terminale anta
	Eindstukken bodemprofiel Pièces finales profilé de seuil End pieces floor profile Endkappe Schwelle	Piezas terminales perfil suelo Koncowki profilu podlogowego Terminale soglia
	Eindstukken Z-T deur Bouchon profilé porte Z-T End pieces Z-T door Endkappe Z-T Tür	Tapetas puerta Z-T Element koncowy Z-T drzwi Terminale profili porte Z e T
	Afdichtingen dorpels Profilés latéral pour bavettes Sill end pieces Endstück für Wetterschenkel	Tapetas condensacion Koncowki do profili podokiennych Tappi soglia
	Glassteunen Supports cale de vitrage Glazing supports Klotzbrücken	Soportes vidrio Podporka pod przeszklenie Supporti per vetro
	Afdekkap voor waterafvoersleuven Capuchon écoulement d'eau Weep hole cover Abdeckkappe Entwässerung	Deflector aire Maskownica otworu drenazowego Paratempesta
	Eindstukken stolpprofielen Bouchons double ouvrant End parts double casement profile Endkappe Stulpprofil	Tapetas perfil doble hoja Koncowka profilu ruchomego slupka Tappo inversione
	Koppelstuk Piece de raccordement Connection piece Kopplungsstueck	Pieza de union Element Laczacy Accessori collegamento
	Eindstukken voor stolpprofielen Bouchons pièce finale pour profilé double ouvrant End parts for double casement profiles Endkappen für Stulpprofile	Tapeta perfil doble hoja Koncowka profilu ruchomego slupka Tappi 2 ante
	Afdichting goot Fermeture gouttière End piece gutter Endkappe Rinne	Tapetas canal Koncowka rynny Terminale gronda
	Eindstuk Piece finale End piece Endkappe	Terminal Koncowka Terminale
	Stootplaat Arrêt vitrage toiture Glass panel stop Endstück Verglasung	Tope del panel de vidrio Ogranicznik wypelnienia Ferro x vetro
	Veranda type 1 Veranda type 1 Veranda type 1 Veranda Typ 1	Veranda tipo 1 Weranda typu 1 Veranda tipo 1
	Paniekdeur Porte de panique Panic door Paniktür	Puenta antipánico Drzwi antypaniczne Porta antipanico
	Diversen Divers Miscellaneous Diverse	Diversos Elementy uzupelniajace Varie
	Klemstuk Clip Clip Federklemme	Clip Uchwyt Clip
	Nokbevestiging Fixation de la faîtière Fixation of the ridge Firstanschluss	Fijacion del resalte Element mocujacy kalenicowy Fissaggio colmo
	Binnenbeglazingsdichting Joint à bourrer Inner glazing gasket Innenverglasungsdichtung	Junta de acristalado interior Uszczelka przyszybowa wewnetrzna Guarnizione del vetro interna
	Buitenbeglazingsdichting Joint de vitrage extérieur Outer glazing gasket Aussenverglasungsdichtung	Junta de acristalado exterior Uszczelka przyszybowa zewnetrzna Guarnizione del vetro esterna
	Buitenbeglazingsdichting Joint de vitrage extérieur Outer glazing gasket Aussenverglasungsdichtung	Junta de acristalado exterior Uszczelka przyszybowa zewnetrzna Guarnizione del vetro esterna
	Akoestische dichting Joint acoustique Acoustical seal gasket Flügelaufschlagdichtung	Junta acustica Uszczelka akustyczna Guarnizione di isolamento acustico
	Middendichtingen Joints centraux Central gaskets Mitteldichtungen	Junta central Uszczelka centralna Guarnizione centrale
	Aanslagdichting Joint de butée Butt strip Anschlagdichtung	Junta tope Uszczelka Guarnizione di battuta
	Dilatatiedichtingen Joints de dilatation Expansion gaskets Dehnungsdichtungen	Junta de dilatacion Uszczelka dylatacyjna Guarnizione di espansione
	Dichting Joint Gasket Dichtung	Junta Uszczelka Guarnizione
	Dichting Joint Gasket Dichtung	Junta Uszczelka Guarnizione
	Afdichtingsstuk Pièce d'étanchéité Sealing piece Dichtstück	Pieza de sellado Element uszczelniajacy Accessorio per sigillatura
	Opzwellende Dichting Joint Gonflant Swelling Gasket Schwellende Dichtung	Junta veranda Uszczelka do werandy Guarnizione espansione
	Dichting veranda Joint véranda Gasket veranda Dichtung Wintergarten	Junta veranda Uszczelka do werandy Guarnizione veranda
	Borsteldichtingen Joints brosse Brushes Bürstendichtungen	Cepillos Szczotki Spazzole
	Isolerend vulstuk Pièce de remplissage isolante Insulating filling piece Isolierendes Füllstück	Pieza de relleno aislante Wkladka izolacyjna Riempinento isolanta
	Einddichting Joint d'assemblage End gasket Enddichtung	Junta Uszczelka koncowa Angolo prestampato
	Isolatie Isolant Insulation Isolation	Aislamiento Izolacyja Isolante
	Brievenkleppen Entrées de courrier Letter boxes Briefeinwurf	Buzones Skrzynka na listy Cassetta posta
	Automatische deurdichtingen Fermetures automatiques Automatic door latches Automatische Türdichtungen	Cierrapuertas automaticos Drzwiowa automat. opadajaca listwa Dispositivo di chiusura soglia
	Variant Variante Variant Variante	Variante Wariant Variante

D0071483

SYMBOLENLIJST
LISTE DES SYMBOLES
LIST OF SYMBOLS
ZEICHENERKLAERUNG

Reynaers Aluminium

A

Stolp-kipraam
Fenêtre double ouvr.-batt.
Double casem.-tilt window
Stulpfenster D/DK
Ventana abatible doble hoja
Okno rozwierano-uchylne dwuskrzydlowe
Finestra a 2 ante ribalta

Draaikip
Oscillo-battant
Turn and tilt
Drehkipp
Oscilobatiente
Okno rozwierno-uchylne
Anta ribalta

Kipdraai
Battantes-ouvrantes
Tilt and turn
Kippdreh
Batiente oscilante
Okno uchylno-rozwierane
Anta ribalta inversa

Draairaam
Fenêtre ouvrante
Side-hung window
Drehfenster
Ventana practicable
Okno rozwierane
Battente

Stolpraam
Fenêtre double ouvrant
Double casement window
Stulp-Flügel Fenster
Ventana doble hoja
Okno rozwierane wuskrzydlowe
Finestra a 2 ante

Valraam
Fenêtre à soufflet
Bottom hung window
Kipp-Fenster
Ventana abatible
Okno uchylne
Wasistas

Afstandbedieningen valraam
Commandes à distance pour fenêtre à soufflet
Remote control for fanlight window
Oberlichtbeschlag für Kipp-Flügel
Funcionamiento a distancia para ventana de techo
Mechanizm do dystansowego uchylania okien
Vasistas con telecmando

DRAAISCHUIFRAAM
OUVRANT PROJETANT
SIDE-HUNG SLIDING WINDOW
DREHSCHIEBEFENSTER

Buitendraaiend raam
Fenêtre ouvrant vers l'extérieur
Outside opening window
Nach aussen öffnendes Fenster
Ventana apertura exterior
Okno otwierane na zewnatrz
Finestra ad apertura esterna

Uitzetzakraam
Châssis à l'Italienne
Top-hung window
Senk-Klappfenster
Ventana proyectante con compas
Okno wychylne na zewnatrz
Sporgere con frizioni

Tuimel- en taatsraam
Châssis pivotant
Pivot window
Schwingflügel
Ventana pivotante
Okno obrotowe
Bilico

Vouwdeur
Porte pliante
Folding door
Falttür
Puerta plegable
Drzwi harmonijkowe
Veranda libro

Schuifkip (TF)
Coulissant-tombant (TF)
Slide and tilt (TF)
Schiebekipptür (TF)
Paralela
Uchylno-przesuwny
Scorrevole parallelo

Schuifraam
Fenêtre coulissante
Sliding window
Schiebefenster
Ventana corredera
Okno przesuwne
Scorrevole

Parallel opengaand raam
Fenêtre ouvrant parallele
Parallel opening window
Parallelausstellfenster
Ventana proyectante paralela
Okno rownolegle wysuwane na zewnatrz
Sporgere parallelo

Kipraam
Fenêtre battante
Tilt window
Kippfenster
Oscilo
Okno uchylne
Vasisdas

Dubbele deur buitendraaiend
Porte double ouvrant vers l'ext.
Double door outward opening
Zweiflügelige Tür aussen öffnend
Puerta doble apertura exterior
Drzwi dwuskrzydlowe otw. na zew.
Porta due ante apertura esterna

Deur binnendraaiend
Porte ouvrant vers l'int.
Door inward opening
Tür nach innen öffnend
Puerta apertura interior
Drzwi otw. do wewnatrz
Porta apertura interna

Deur buitendraaiend
Porte ouvrant vers l'ext.
Door outward opening
Tür aussen öffnend
Puerta apertura exterior
Drzwi otw. na zewnatrz
Porta apertura esterna

Verankeringen
Ancrages
Fixing lugs
Verankerungen
Anclajes
Kotwy
Ancoraggio

Sluitpennen en sluitstukken
Rouleaux et gâches
Lock pins and lock plates
Schliessrollen und Schliessstücke
Bulones y cerraderos
Plytka i kolek ryglujacy
-

Goot
Gouttière
Gutter
Rinne
Canal
Rynna
Gronda

Dakvenster
Tabatière
Attic window
Dachfenster
Ventana de techo
Okno dachowe
Lucernario

Kunststof dakbedekking
Toiture synthétique
Synthetic roofing
Kunststoff Dachdeckung
Cubierta en material sintetico
Wypelnienie poliweglanem na dachy
Pannello

Zelfklevende dubbelzijdige tape
Bande autocollante 2 faces
Self-adhesive double sided tape
Selbstklebendes beidseitiges Band
Cinta autoadhesiva de dos caras
Biadesivo

Domotica
Domotique
Domotics
Domotik
Domótica
Domotica
-

Profielen met hoge isolatiewaarde
Profilés avec valeur d'isolation élevée
Profiles with high insulation value
Profile mit höhen Isolationswert
Perfiles alto aislamiento térmico
Profile o wysokiej izolacyjnosci termicznej
Alto isolarento

Wielen
Galets
Rollers
Laufwagen
Ruletas
Wozki
Carrelli

Regeltringels
Tringles de réglage
Adjustment rods
Regulierstange
Varilla de ajuste
Listwy regulacyjne
Astina

Geleidingsplaat
Guide
Guide plate
Führung
Placa guia
Element naprowadzajacy
Guida

D0071484

SYMBOLENLIJST
LISTE DES SYMBOLES
LIST OF SYMBOLS
ZEICHENERKLAERUNG

A

	Gereedschap Outillage Tool Werkzeug	Util Narzedzie Utensile
	Gereedschappen en machines voor ontwatering van kader Outillage et machinerie pour drainage dormant Tools and machinery for draining outer frame Werkzeuge und Maschinen für Entwässerung Blendrahmen	Utiles y maquinaria para el drenaje del marco Narzedzia i maszyny do drenazy oscieznic Utensili e macchinari per il drenaggio del telaio
	Gereedschappen en machines voor ontwatering van vleugel Outillage et machinerie pour drainage ouvrant Tools and machinery for draining vent Werkzeuge und Maschinen für Entwässerung Flügel	Utiles y maquinaria para el drenaje de la hoja Narzedzia i maszyny do drenazy skrzydel Utensili e macchinari per il drenaggio dell'anta
	Decompressie Decompression Decompression Dekompression	Descompresion Dekompresja Decompressione
	Gereedschappen en machines voor T-verbinding Outillage et machinerie pour jonction-T Tools and machinery for T-brackets Werkzeuge und Maschinen für T-Verbinder	Utiles y maquinaria para topes de unión Narzedzia i maszyny do polaczen teowych Utensili e macchinari per i giunti
	Gereedschappen en machines voor krukuitsparing Outillage et machinerie pour fermeture Tools and machinery for closure Werkzeuge und Maschinen für Beschläge	Utiles y maquinaria para el cierre Narzedzia i maszyny do zamkniec Utensili e macchinari per le chiusure
	Multifunctionele matrijs Matrice multifonctionnelle Multifunctional punch tool Mehrzweckstanzwerkzeug	Matriz multifuncional Wykrojnik wielofunkcyjny Punzonatrice multifunzionale
	Geleide matrijs Matrice guidée Punch tool Stanzwerkzeug	Matriz Wykrojnik Punzonatrice
	Handmatig gereedschap Outillage manuel Manual tools Handwerkzeuge	Util manual Narzedzie reczne Dime
	Freessjabloon Calibre de fraisage Stencil plate for milling head Fräseschablone	Plantilla para copiadora Szablon do frezarki Maschera per pantografo
	Enkelkopse freesmachine Frais. à copier à une broche Copy router 1 spindle Einspindel-Kopierfräse	Copiadora de un cabezal Frezarka z jedna glowica Pantografo di copia a 1 mandrino 1 mandrino
	Frees- en boormachine Fraiseuse et foreuse Router and drilling machine Fräse- und Bohrgerät	Copiadora taladradora Frezarka z wiertarka Centro dilavoro
	Bewerkingscentrum Centre d'usinage Machining center Bearbeitungszentrum	Centre de mecanizado Centrum obrodcze Centro di lavorno

	Hydropneumatische pers Presse hydropneumatique Hydropneumatic press Hydropneumatische Presse	Prensa neumática Prasa hydropneumatyczna Pressa idropneumatica
	Zaagmachine Tronçonneuse Sawing machine Kreissäge	Maquina de corte Pila do ciec przestrzennych Macchina per taglio
	Hoekenpers Sertisseuse Crimper Eckverbindungsmaschine	Ensambladora Zaciskarka narozy Cianfrinatrice
	Handmatrijs Matrice manuelle Manual punch tool Handstanzwerkzeug	Prensa manual Wykrojnik reczny Punzonatrice manuale
	Gereedschap voor lijminjectie Outillage pour encollage Tool for injection Werkzeug fuer Klebeinjektion	Util para inyeccion Narzedzie do wtrysku kleju Utensile colla
	Gereedschap voor krukken Outillage pour cremones Tool for handles Werkzeug fuer Handhebel	Util para manetas Narzedzie do klamek Utensile per maniglie
	Gereedschap voor sluitlatten Outillage pour tringles Tool for linkbars Werkzeug fuer Schubstange	Util para barras union Narzedzie do listew sterujacych okuciami Utensile per barre di collegamento
	Gereedschap voor T-verbindingen Outillage pour connections-T Tool for T-connections Werkzeug fuer T-Verbindungen	Util para topes de union Narzedzie do polaczen Teowych Utensile per travesi
	Klemblokken Blocs de serrage Clamping blocks Spannbacken	Bloques de presión Bloki zaciskowe Blocchetti di supporto
	Gereedschap voor ontwatering buitenkaders Outillage pour drainage dormants Tool for drainage outer frames Werkzeug fuer Entwaesserung Blendrahmen	Util drenaje marco Narzedzie do drenazy oscieznic Utensile per drenaggio telaio
	Gereedschap voor hoekverbinding Outillage pour connection d'equerre Tool for corner connection Werkzeug fuer Eckverbindung	Util union esquina Narzedzie do polaczen narozynych Utensile per connessioni d'angolo
	Gereedschap voor montage Outillage pour montage Tool for assembly Werkzeug für Montage	Util para colocacion Narzedzie do montazu Utensile assemblaggio
	Gereedschap voor deursluiter Outillage pour fermeture porte Tool for door closer Werkzeug für Türschliesser	Util para cierrapuertas Narzedzie do samozamykacza drzwiowego Utensile chiu di porta
	Gereedschap voor scharnieren Outillage pour charnieres Tool for hinges Werkzeug für Bänder	Util para bisagras Narzedzie do zawiasy Utensile cerniere
	Gereedschap voor sloten Outillage pour fermetures Tool for locks Werkzeug für Schlösser	Util para cerraduras Narzedzie do zamka Utensile serrature
	Gereedschap voor wisselprofielen Outillage pour chicanes Tool for sections Werkzeug für Wechselprofile	Util para encuentros centrales Narzedzie do przekrojow Utensile chicanes
	Gereedschap voor beglazing Outillage pour vitrage Tool for glazing Werkzeug für Verglasung	Util para acristalamiento Narzedzie do przeszklen Utensile vetro
	Gereedschap voor diverse toepassingen Outillage pour applications divers Tool for miscellaneous applications Werkzeug für diverse Anwendungen	Utiles para varias aplicaciones Narzedzie do montazu elementow uzupelniajacych Utensile vari

D0071485

SYMBOLENLIJST
LISTE DES SYMBOLES
LIST OF SYMBOLS
ZEICHENERKLAERUNG

Reynaers Aluminium

A

Gereedschap voor dichtingen Outillage pour joints Tool for gaskets Werkzeug für Dichtungen	Util para juntas Narzedzie do uszczelki Utensile guarnizioni
Gereedschap voor bevestiging wielen Outillage pour fixation des roulettes Tool for fixation rollers Werkzeug für Befestigung Laufräder	Util para fijación de ruletas Narzedzie do montazu wozkow Utensile carrelli
Gereedschap voor ontwatering vleugels Outillage pour drainage ouvrants Tool for drainage vents Werkzeug für Entwässerung Flügel	Util para drenaje hoja Narzedzie do drenazu skrzydla Utensile drenaggio anta
Uitfrezing voor inbouw bovenspeun in kozijn Fraisage pour encastrement gond supérieur dans la fenêtre Milling for building in upper pivot in window Ausfräsung für Einbau eines oberen Lagers im Rahmen	Fresado para pivotante en marco superior Frez do montazu gornego sworznia w oknie Lavorazioni super. finestra pivottante
Uitfrezing voor inbouw vloerspeun in vleugel Fraisage pour encastrement gond inférieur dans l'ouvrant Milling for building in floor pivot in vent Ausfräsung für Einbau eines Bodenlagers im Flügel	Fresado para pivotante en hoja inferior Frez do montazu dolnego sworznia w skrzydle Lavorazioni infer. finestra pivottante
Uitfrezing voor inbouw bovenspeun in vleugel Fraisage pour encastrement gond supérieur dans l'ouvrant Milling for building in upper pivot in vent Ausfräsung für Einbau eines oberen Lagers im Flügel	Fresado para pivotante en hoja superior Frez do montazu gornego sworznia w skrzydle Lavorazione super. finestra pivottante
Monteertafel Table de montage Assembly bench Montagetisch	Banco de montaje Stol montazowy Banco montaggio
Elektrische aansluiting Fixation électrique Electric connection Elektrisches Anschluss	Conexión eléctrica Polaczenie elektryczne Connessione elettrica
Compressor Compresseur Compressor Kompressor	Compresor Kompresor Compressore
Kogel Dr. Hahn Bille Dr. Hahn Ball Dr. Hahn Kugel Dr. Hahn	Bola Dr. Hahn Kulka Dr. Hahn -
Mechanische aansluiting Fixation mecanique Mechanical connection Mechanischer Anschluss	Conexión mecánica Polaczenie mechaniczne Fissaggio meccanico
Pneumatische aandrijving Propulsion pneumatic Pneumatic drive Pneumatische Antrieb	Destornillador neumatico Pneumatyczny naped Cilindro pneumatica
Ponsunit Unité d'étamper Punch unit Stanzeinheit	Punzon Wykrojnik Unita punzonatrice
Land Pays Country Land	Pais Kraj Nazione
Min. profiellengte Longueur min. de profilé Min. length of profile Min. Profillänge	Longitud mínima del perfil Minimalna dlugosc profilu Lunghezza minima profilo
Max. profiellengte Longueur max. de profilé Max. length of profile Max. Profillänge	Longitud máxima del perfil Maksymalna dlugosc profilu Lunghezza max profilo
Max. profielhoogte Hauteur max. de profilé Max. height of profiles Max. Profilhöhe	Altura máxima del perfil Maksymalna wysokosc profilu Max altezza
Max. horizontale beweging Movement max. horizontale Max. horizontal movement Max. horizontale Versetzung	Movimiento horizontal máximo Maksymalny ruch poziomy Spostamento orizz. max
Horizontaal hoekbereik Intervalle d'équerre horizontale Horizontal corner range Eckbereich Horizontal	Rango de corte a inglete horizontal Zakres katow poziomych Dimensione taglio orizz.
Verticaal hoekbereik Intervalle d'équerre verticale Vertical corner range Eckbereich Vertikal	Rango de corte a inglete vertical Zakres katow pionowych Dimensione taglio vert.
Motor Moteur Motor Antrieb	Motor Silownik napedowy Motore
Gewicht Poids Weight Gewicht	Pesos Ciezar Peso
Max. toerental Vitesse d'axe max. Max. spindle speed Max. Drehzahl	Velocidad de sierra Maksymalna predkosc obrotowa Velocita max lama

D0071486

B

Reynaers Aluminium

Algemene informatie systemen
Généralités séries
General Information System
Allgemeine Information System

VERWERKINGSVOORSCHRIFTEN

I. ALGEMEEN

Zie catalogus “1.Algemene informatie” (089.C01E.00 editie 11/2004)

II. VERWERKINGSVOORSCHRIFTEN CONCEPT SYSTEM ® 68

Zie catalogus “12. CS 68”

RECOMMANDATIONS DE MISE EN OEUVRE

I. GENERAL

Voir catalogue “1. Informations générales” (089.C01E.00 édition 11/2004)

II. RECOMMANDATIONS DE MISE EN OEUVRE CONCEPT SYSTEM ® 68

Voir catalogue “12. CS 68”

PROCESSING DATA

I. GENERAL

See catalogue “1.General information”(089.C01E.00 edition 11/2004)

II. PROCESSING DATA CONCEPT SYSTEM ® 68

See catalogue “12. CS 68”

VERARBEITUNGSVORSCHRIFTEN

I .ALLGEMEIN

Siehe Katalog “1. Allgemeine information (089.C01E.00 Ausgabe 11/2004)

II.VERARBEITUNGSVORSCHRIFTEN CONCEPT SYSTEM ® 68

Siehe Katalog “12. CS 68”

MAX. AFMETINGEN
DIMENSIONS MAX.
MAX. SIZES
MAX. ABMESSUNGEN

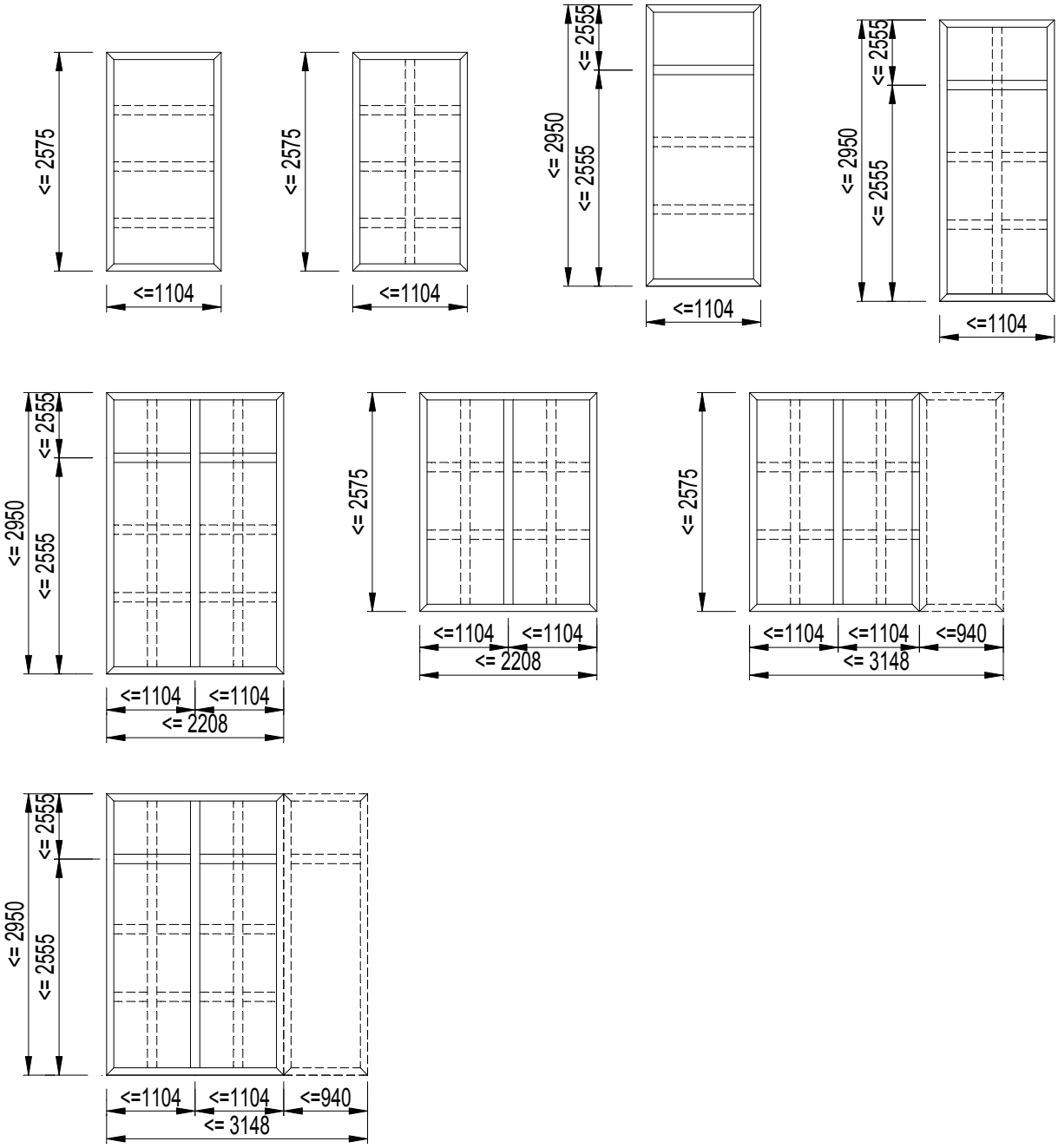

Een versterkingsprofiel dient gebruikt te worden wanneer de statica dit vereist.
Een versterkingsprofiel (030.1096.00+030.1097.XX + 030.1098) dient gebruikt te worden langs de niet aan het vuur blootgestelde zijde. Indien de blootgestelde zijde ongekend is, aan beide zijden toepassen.

D0083541

MAX. AFMETINGEN
DIMENSIONS MAX.
MAX. SIZES
MAX. ABMESSUNGEN

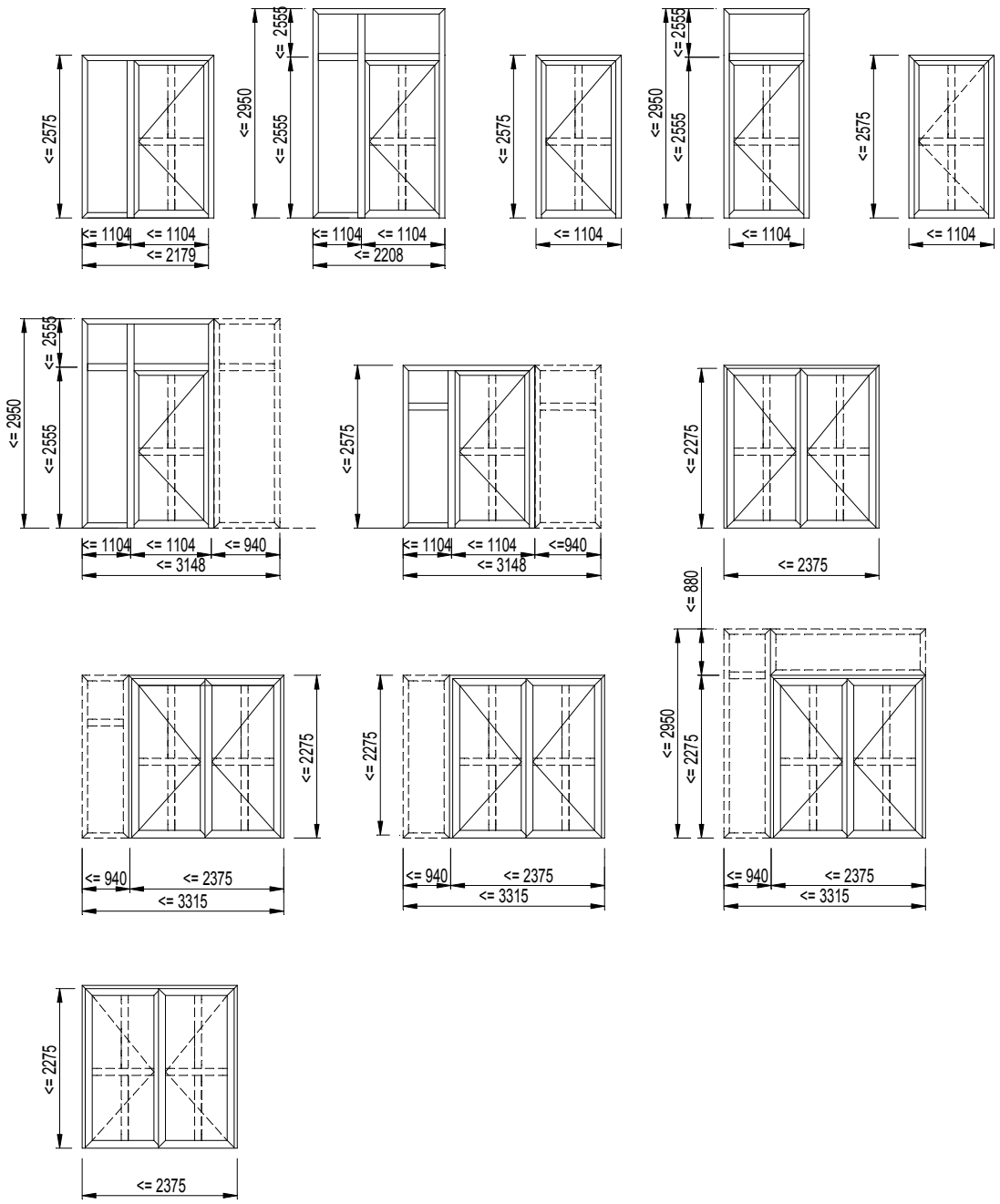

Voorwaarden

De deurbladen/ raamdeuren zijn afgehangen aan minimaal 3 stuks aluminium scharnieren. Optioneel is de toepassing van een 4e scharnier.
Aan de scharnierzijde dient men 3 stuks dievenklauwen toe te passen.
Er dienen deurdrangers te worden gemonteerd van het type Geze TS400 of TS5000
In geval van een deurblad, dient er een 2-punts, 3-punts of een 5 -puntslot te worden toegepast, die qua functionaliteit een constructieve opbouw in overeenstemming is met de geteste varianten van WSS en Wilka.
Bij andere sloten als de geteste 2 puntssluiting, dient er in de boven en onderregel een temperatuurpen te zijn aangebracht.
Er dienen krukken te worden toegepast, die qua functionaliteit een constructieve opbouw in overeenstemming zijn met de geteste varianten.

Een versterkingsprofiel dient gebruikt te worden wanneer de statica dit vereist.
Een versterkingsprofiel (030.1096.00+030.1097.XX + 030.1098) dient gebruikt te worden langs de niet aan het vuur blootgestelde zijde. Indien de blootgestelde zijde ongekend is, aan beide zijden toepassen.

D0083542

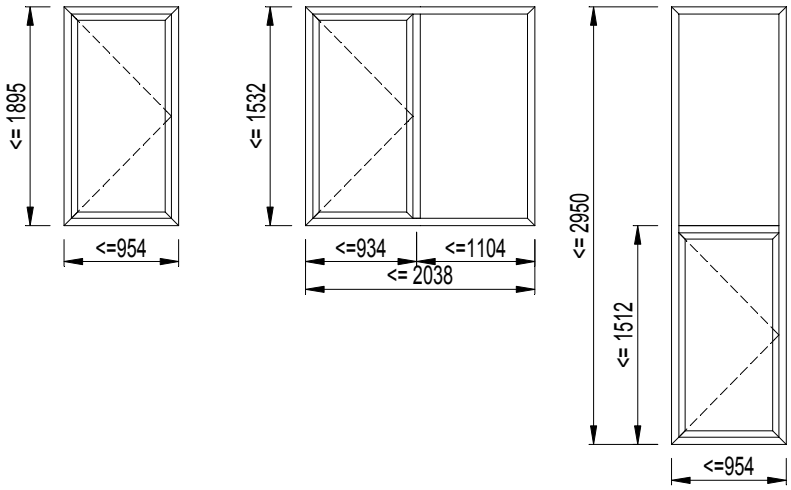

Let op alleen met Sobinco Chrono Safe toepassen

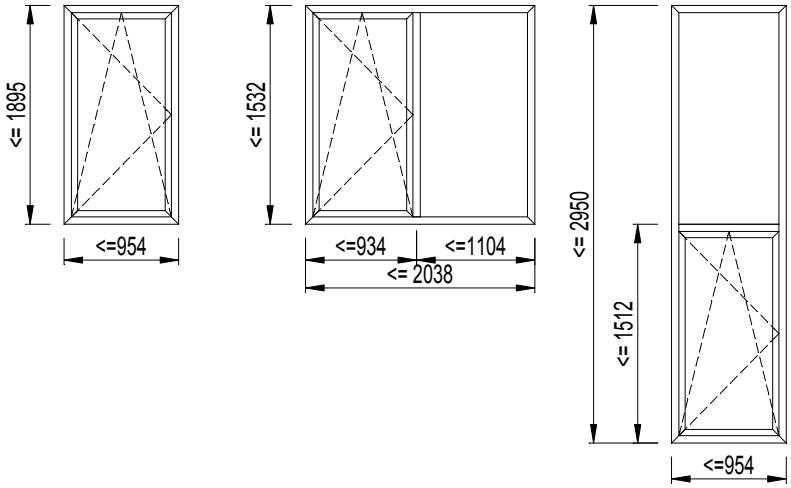

Let op alleen met Sobinco Chrono Safe toepassen

AGC Pyrobelite 7

2008-Efectis-R0437
2008-Efectis-R0382

fire resistant glas EW 30 following EN 13501-2

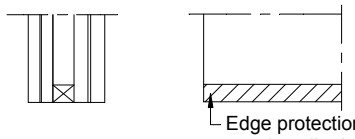

Glaverbel Pyrobelite 7	
Glazing type	Double
Application	Internal/External
Thickness	44.2/6/7=23 mm(+tolerantie)
Weight	37 kg/m²
Light transmittance	78%
Ug -value	3.2 W/m²k
Sound reduction index	40 dB
Max approved glass dimensions(b x h)	width ≤ --mm height ≤ --mm area ≤ --m²
CPD nr.	--

AGC Pyrobelite 7

2003-CVB-R0099

fire resistant glas EW 30 following EN 13501-2

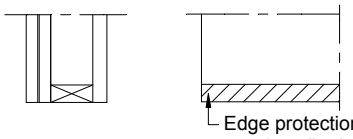

Glaverbel Pyrobelite 7	
Glazing type	Double
Application	Internal/External
Thickness	4/12/7=24 mm(+tolerantie)
Weight	34 kg/m²
Light transmittance	79%
Ug -value	2.8 W/m²k
Sound reduction index	38 dB
Max approved glass dimensions(b x h)	width ≤ --mm height ≤ --mm area ≤ --m²
CPD nr.	--

AGC Pyrobelite 11F30

2001-CVB-R03618

fire resistant glas EW 30 following EN 13501-2

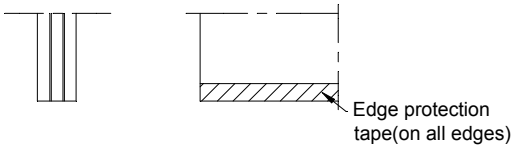

Glaverbel Pyrobelite 11F30	
Glazing type	Single
Application	Internal
Thickness	12 mm (+tolerantie)
Weight	23 kg/m²
Light transmittance	87%
Ug -value	5,5 W/m²k
Sound reduction index	35 dB
Max approved glass dimensions(b x h)	width ≤ --mm height ≤ --mm area ≤ --m²
CPD nr.	--

AGC Pyrobelite 7

2004-CVB-R0052
2005-CVB-B0141

fire resistant glas EW 30 following EN 13501-2

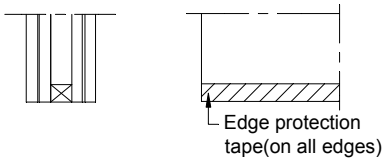

Glaverbel Pyrobelite 7	
Glazing type	Double
Application	Internal/External
Thickness	33.2/6/7=21 mm(+tolerantie)
Weight	32 kg/m²
Light transmittance	79%
Ug -value	3.2 W/m²k
Sound reduction index	39 dB
Max approved glass dimensions(b x h)	width ≤ --mm height ≤ --mm area ≤ --m²
CPD nr.	--

Pilkington Pyrodur 10

080.22815
080.42410
080.42411

fire resistant glas EW 30 following EN 13501-2

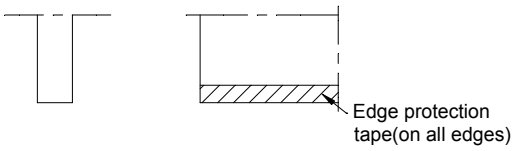

Pilkington Pyrodur 10	
Glazing type	Single
Application	Internal
Thickness	10 mm (+/-1 mm)
Weight	24 kg/m²
Light transmittance	88%
Ug -value	5,4 W/m²k
Sound reduction index	36 dB
Max approved glass dimensions(b x h)	width ≤ --mm height ≤ --mm area ≤ --m²
CPD nr.	--

TOEGESTANE PANEELSOORTEN

- 2 mm alu / 15 mm Promatect-H / 6 mm gehard glas
  totale dikte = 33mm
  breedte ≤ 1395 mm
  hoogte ≤ 906 mm
  oppervlakte ≤ 1,27 m2

- 1,5 mm alu / 15 mm Promatect-H / 1,5 mm alu
  totale dikte = 28mm
  breedte ≤ 875 mm
  hoogte ≤ 1912 mm
  oppervlakte < 1,68 m2

D0083546

C

Reynaers Aluminium

Profielen

Profilés

Profiles

Profile

CS 68-FP
EW 30

PROFIELLIJST
LISTE DES PROFILES
LIST OF PROFILES
PROFILLISTE

Reynaers Aluminium

Art. N°			Art. N°		
001.0200.XX	12N.C.053	D0080998	005.1250.XX	12N.C.040	D0080969
001.0201.XX	12N.C.053	D0080998	005.1270.XX	12N.C.044	D0080980
001.0215.XX	12N.C.051	D0080993	005.1271.XX	12N.C.044	D0080980
001.0248.XX	12N.C.045	D0080981	005.1442.XX	12N.C.030	D0080807
001.0255.XX	12N.C.043	D0080978	005.1443.XX	12N.C.030	D0080807
001.0260.XX	12N.C.045	D0080981	005.1444.XX	12N.C.032	D0080810
004.3846.XX	12N.C.038	D0080933	005.1449.XX	12N.C.009	D0080750
005.0033.XX	12N.C.062	D0081018	005.1451.XX	12N.C.031	D0080809
005.0049.XX	12N.C.062	D0081018	005.1455.XX	12N.C.011	D0080752
005.0052.XX	12N.C.016	D0080768	005.1456.XX	12N.C.011	D0080752
005.0071.XX	12N.C.060	D0081014	005.1521.XX	12N.C.015	D0080764
005.0102.XX	12N.C.013	D0080761	005.1815.XX	12N.C.056	D0081007
005.0111.XX	12N.C.026	D0080800	005.1869.XX	12N.C.054	D0081004
005.0112.XX	12N.C.014	D0080762	005.1898.XX	12N.C.054	D0081004
005.0113.XX	12N.C.017	D0080773	005.2015.XX	12N.C.056	D0081007
005.0114.XX	12N.C.019	D0080775	005.2015.XX	12N.C.057	D0092068
005.0120.XX	12N.C.018	D0080774	005.2027.XX	12N.C.059	D0081010
005.0121.XX	12N.C.014	D0080762	005.2029.XX	12N.C.059	D0081010
005.0123.XX	12N.C.021	D0080777	005.2034.XX	12N.C.062	D0081018
005.0125.XX	12N.C.002	D0080741	005.2439.XX	12N.C.005	D0080745
005.0136.XX	12N.C.001	D0080740	005.3014.XX	12N.C.055	D0081005
005.0139.XX	12N.C.004	D0080743	005.3026.XX	12N.C.055	D0081005
005.0140.XX	12N.C.002	D0080741	008.0226.XX	12N.C.053	D0080998
005.0141.XX	12N.C.004	D0080743	008.0227.XX	12N.C.053	D0080998
005.0144.XX	12N.C.033	D0080811	008.0514.XX	12N.C.006	D0080746
005.0152.XX	12N.C.050	D0080992	008.0540.XX	12N.C.006	D0080746
005.0177.XX	12N.C.062	D0081018	016.1534.XX	12N.C.062	D0081018
005.0183.XX	12N.C.001	D0080740	026.0119.XX	12N.C.038	D0080933
005.0192.XX	12N.C.013	D0080761	030.0019.XX	12N.C.038	D0080933
005.0202.XX	12N.C.048	D0080988	030.0138.00	12N.C.037	D0080827
005.0203.XX	12N.C.041	D0080975	030.0139.00	12N.C.037	D0080827
005.0221.XX	12N.C.049	D0080990	030.1096.00	12N.C.028	D0080804
005.0226.XX	12N.C.053	D0080998	030.1097.00	12N.C.029	D0080805
005.0227.XX	12N.C.053	D0080998	030.1098.00	12N.C.029	D0080805
005.0251.XX	12N.C.041	D0080975	030.3097.XX	12N.C.028	D0080804
005.0252.XX	12N.C.042	D0080976	030.3099.XX	12N.C.029	D0080805
005.0258.XX	12N.C.047	D0080987	030.3119.XX	12N.C.038	D0080933
005.0276.XX	12N.C.045	D0080981	030.3606.XX	12N.C.034	D0080817
005.0277.XX	12N.C.045	D0080981	030.3607.XX	12N.C.034	D0080817
005.0292.XX	12N.C.048	D0080988	030.3608.XX	12N.C.034	D0080817
005.0420.XX	12N.C.027	D0080801	030.3609.XX	12N.C.034	D0080817
005.0438.XX	12N.C.005	D0080745	030.3610.XX	12N.C.034	D0080817
005.0446.XX	12N.C.007	D0080748	030.3611.XX	12N.C.034	D0080817
005.0447.XX	12N.C.007	D0080748	030.3612.XX	12N.C.034	D0080817
005.0448.XX	12N.C.008	D0080749	030.3613.XX	12N.C.034	D0080817
005.0452.XX	12N.C.010	D0080751	030.3614.XX	12N.C.034	D0080817
005.0525.XX	12N.C.003	D0080742	030.3615.XX	12N.C.034	D0080817
005.0544.XX	12N.C.024	D0080778	030.3616.XX	12N.C.036	D0080822
005.0569.XX	12N.C.054	D0081004	030.3617.XX	12N.C.036	D0080822
005.0598.XX	12N.C.054	D0081004	030.3628.XX	12N.C.035	D0080819
005.0813.XX	12N.C.017	D0080773	030.3629.XX	12N.C.035	D0080819
005.0814.XX	12N.C.020	D0080776	030.3630.XX	12N.C.035	D0080819
005.0820.XX	12N.C.018	D0080774	030.3631.XX	12N.C.035	D0080819
005.0823.XX	12N.C.020	D0080776	030.3632.XX	12N.C.035	D0080819
005.0873.XX	12N.C.060	D0081014	030.3633.XX	12N.C.035	D0080819
005.0874.XX	12N.C.060	D0081014	030.3634.XX	12N.C.035	D0080819
005.0875.XX	12N.C.061	D0081017	030.3635.XX	12N.C.035	D0080819
005.0876.XX	12N.C.061	D0081017	030.3644.XX	12N.C.034	D0080817
005.1028.XX	12N.C.058	D0081008	030.3647.XX	12N.C.063	D0082869
005.1100.XX	12N.C.022	D0080797	030.3648.XX	12N.C.063	D0082869
005.1101.XX	12N.C.012	D0080755	030.3649.XX	12N.C.063	D0082869
005.1109.XX	12N.C.023	D0080798	030.3650.XX	12N.C.063	D0082869
005.1110.XX	12N.C.025	D0080799	030.3651.XX	12N.C.063	D0082869
005.1174.XX	12N.C.064	D0082110	030.3652.XX	12N.C.063	D0082869
005.1175.XX	12N.C.062	D0081018	030.3653.XX	12N.C.063	D0082869
005.1213.XX	12N.C.052	D0080996	030.3654.XX	12N.C.063	D0082869
005.1216.XX	12N.C.046	D0080985	030.3655.XX	12N.C.063	D0082869
005.1220.XX	12N.C.052	D0080996	030.3667.XX	12N.C.063	D0082869
005.1236.XX	12N.C.046	D0080985	030.3668.XX	12N.C.063	D0082869
005.1249.XX	12N.C.040	D0080969	030.3669.XX	12N.C.063	D0082869

C

PROFIELLIJST
LISTE DES PROFILES
LIST OF PROFILES
PROFILLISTE

Art. N°			Art. N°		
030.3670.XX	12N.C.063	D0082869			
048.0919.XX	12N.C.039	D0080940			
108.0080.XX	12N.C.060	D0081014			
108.0081.XX	12N.C.060	D0081014			

CS 68-FP
EW 30

BUITENKADER RAAM NAAR BINNENDRAAIEND
DORMANT FENETRE OUVRANT VERS L'INT.
OUTER FRAME WINDOW INWARD OPENING
BLENDRAHMEN FENSTER NACH INNEN OEFFNEND

	A dm²/m	P dm²/m	Lm	Ix cm⁴	Wx cm³	ax mm	Iy cm⁴	Wy cm³	ay mm
005.0136.XX	28.14	8.1	7.00/5.00	12.770	3.936	26.56	4.615	1.340	16.57
005.0183.XX	30.74	10.8	7.00/5.00	16.663	5.200	26.95	10.402	2.530	22.88

X Y Y X 0

005.0136.XX

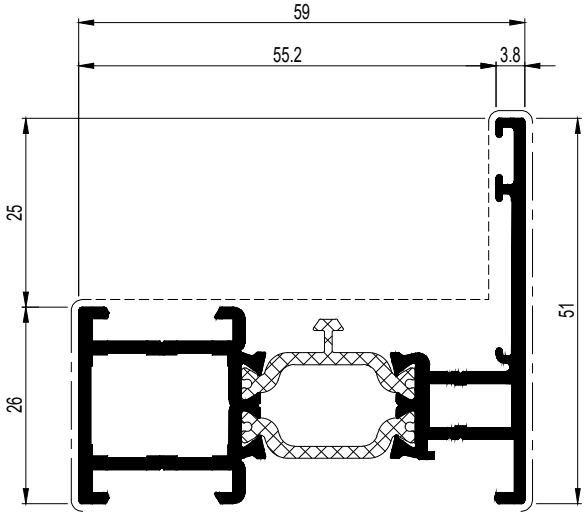

005.0183.XX

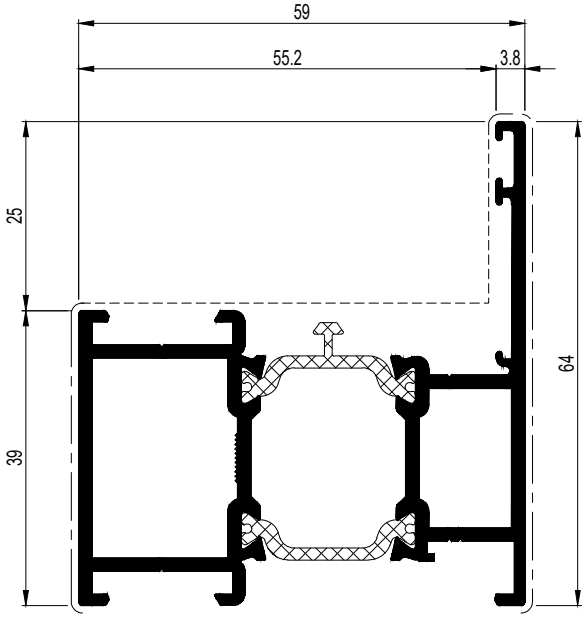

005.0136.XX	
068.7850.00 068.7851.00	095.H800.00 of-ou-or-oder 095.B500.00
068.8840.00	097.W900.00 097.O900.00 097.P000.00 of-ou-or-oder 097.F800.00 of-ou-or-oder 097.0375.00
068.7850.00 068.7851.00 050.5153.-- (2x) 068.5938.-- (2x)	097.W900.00 097.O900.00 097.P000.00 of-ou-or-oder 097.F800.00 of-ou-or-oder 097.0375.00
068.7850.00 068.7851.00 068.5920.-- (2x) 068.5938.-- (2x)	097.W900.00 097.O900.00 097.P000.00 of-ou-or-oder 097.F800.00 of-ou-or-oder 097.0375.00
068.8730.00+(*) or 068.8740.00+(*) (*) 050.5153.--	097.P800.00 097.O900.00 097.P000.00 of-ou-or-oder 097.F800.00 of-ou-or-oder 097.0374.00
068.8735.00 050.5153.--	097.P800.00 097.O900.00 097.P000.00 of-ou-or-oder 097.F800.00 of-ou-or-oder 097.0374.00
068.8730.00+(*) or 068.8740.00+(*) (*) 068.5920.00	097.P800.00 097.O900.00 097.P000.00 of-ou-or-oder 097.F800.00 of-ou-or-oder 097.0374.00
068.8735.00 068.5920.00	097.P800.00 097.O900.00 097.P000.00 of-ou-or-oder 097.F800.00 of-ou-or-oder 097.0374.00
068.8779.00 060.8715/16.00	097.0009.00
068.8905.00 060.8715/16.00	097.0008.00
069.6565.04	---
060.8723.-- or 060.8746.00 060.8715/16.00	---

005.0183.XX	
068.7952.00 068.7853.00	095.H800.00 of-ou-or-oder 095.B500.00
068.8841.00	097.W900.00 097.P100.00 097.P200.00 of-ou-or-oder 097.0375.00
068.7952.00 068.7853.00 050.5153.-- (2x) 068.5938.-- (2x)	097.W900.00 097.P100.00 097.P200.00 of-ou-or-oder 097.0375.00
068.7952.00 068.7853.00 068.5920.-- (2x) 068.5938.-- (2x)	097.W900.00 097.P100.00 097.P200.00 of-ou-or-oder 097.0375.00
068.8731.00+(*) or 068.8741.00+(*) (*) 050.5153.-- (2x)	097.P800.00 097.P100.00 097.P200.00 of-ou-or-oder 097.0374.00
068.8736.00 050.5153.-- (2x)	097.P800.00 097.P100.00 097.P200.00 of-ou-or-oder 097.0374.00
068.8731.00+(*) or 068.8741.00+(*) (*) 068.5920.00 (2x)	097.P800.00 097.P100.00 097.P200.00 of-ou-or-oder 097.0374.00
068.8736.00 068.5920.00 (2x)	097.P800.00 097.P100.00 097.P200.00 of-ou-or-oder 097.0374.00
068.8779.00 068.8906.04 060.8715/16.00	097.0009.00
068.8905.00 068.8906.04 (2x) 060.8715/16.00	097.0008.00
069.6566.04	---
060.8723.-- or 060.8746.00 060.8715/16.00	---

C

D0080740

CS 68-FP
EW 30

BUITENKADER RAAM NAAR BINNENDRAAIEND
DORMANT FENETRE OUVRANT VERS L'INT.
OUTER FRAME WINDOW INWARD OPENING
BLENDRAHMEN FENSTER NACH INNEN OEFFNEND

	A dm²/m	P dm²/m	Lm	Ix cm⁴	Wx cm³	ax mm	Iy cm⁴	Wy cm³	ay mm
005.0125.XX	33.32	13.4	7.00	19.988	6.260	27.07	20.059	4.214	29.40
005.0140.XX	35.94	15.9	7.00	23.319	7.325	27.17	34.450	6.368	35.90

X Y Y X 0

005.0125.XX

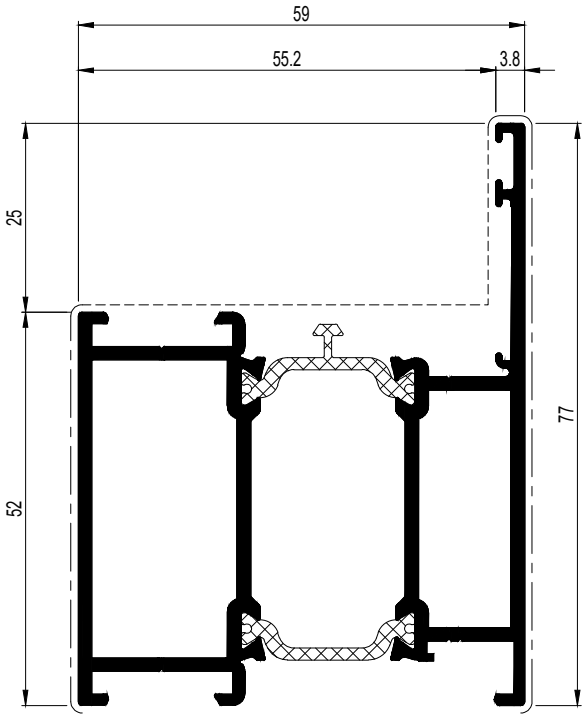

005.0125.XX	
068.7854.00 068.7855.00	095.H800.00 of-ou-or-oder 095.B500.00
068.8842.00	097.W900.00 097.P100.00 097.P200.00 of-ou-or-oder 097.F900.00 of-ou-or-oder 097.0375.00
068.7854.00 068.7855.00 050.5153.-- (2x) 068.5938.-- (2x)	097.W900.00 097.P100.00 097.P200.00 of-ou-or-oder 097.F900.00 of-ou-or-oder 097.0375.00
068.7854.00 068.7855.00 068.5920.-- (2x) 068.5938.-- (2x)	097.W900.00 097.P100.00 097.P200.00 of-ou-or-oder 097.F900.00 of-ou-or-oder 097.0375.00
068.8732.00+(*) or 068.8742.00+(*) (*) 050.5153.-- (2x)	097.P800.00 097.P100.00 097.P200.00 of-ou-or-oder 097.F900.00 of-ou-or-oder 097.0374.00
068.8737.00 050.5153.-- (2x)	097.P800.00 097.P100.00 097.P200.00 of-ou-or-oder 097.F900.00 of-ou-or-oder 097.0374.00
068.8732.00+(*) or 068.8742.00+(*) (*) 068.5920.00 (2x)	097.P800.00 097.P100.00 097.P200.00 of-ou-or-oder 097.F900.00 of-ou-or-oder 097.0374.00
068.8737.00 068.5920.00 (2x)	097.P800.00 097.P100.00 097.P200.00 of-ou-or-oder 097.F900.00 of-ou-or-oder 097.0374.00
068.8779.00 068.8906.04 (2x) 060.8715/16.00	097.0009.00
068.8905.00 068.8906.04 (4x) 060.8715/16.00	097.0008.00
069.6567.04	---
060.8723.-- or 060.8746.00 060.8715/16.00	---

005.0140.XX

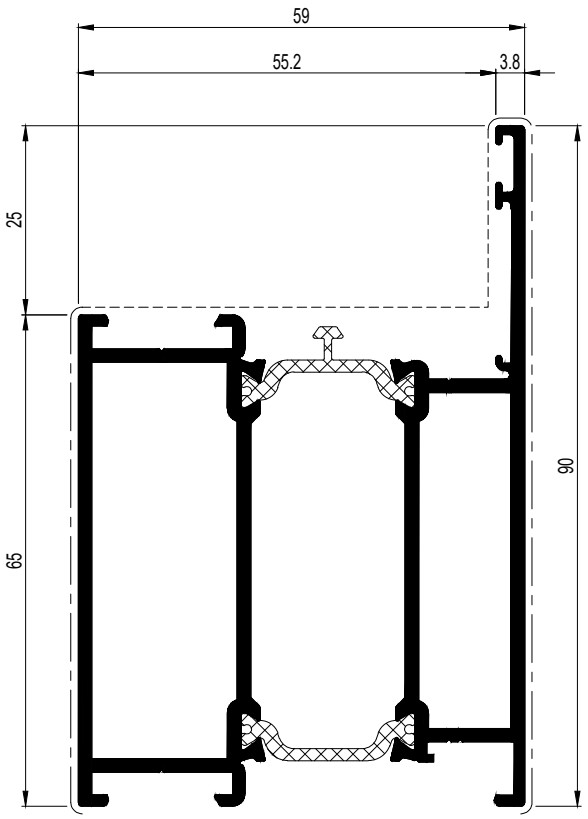

005.0140.XX	
068.7856.00 068.7857.00	095.H800.00 of-ou-or-oder 095.B500.00
068.8843.00	097.W900.00 097.P100.00 097.P200.00 of-ou-or-oder 097.0375.00
068.7856.00 068.7857.00 050.5153.-- (2x) 068.5938.-- (2x)	097.W900.00 097.P100.00 097.P200.00 of-ou-or-oder 097.0375.00
068.7856.00 068.7857.00 068.5920.-- (2x) 068.5938.-- (2x)	097.W900.00 097.P100.00 097.P200.00 of-ou-or-oder 097.0375.00
068.8733.00+(*) or 068.8743.00+(*) (*) 050.5153.-- (2x)	097.P800.00 097.P100.00 097.P200.00 of-ou-or-oder 097.0374.00
068.8738.00 050.5153.-- (2x)	097.P800.00 097.P100.00 097.P200.00 of-ou-or-oder 097.0374.00
068.8733.00+(*) or 068.8743.00+(*) (*) 068.5920.00 (2x)	097.P800.00 097.P100.00 097.P200.00 of-ou-or-oder 097.0374.00
068.8738.00 068.5920.00 (2x)	097.P800.00 097.P100.00 097.P200.00 of-ou-or-oder 097.0374.00
068.8779.00 068.8906.04 (3x) 060.8715/16.00	097.0009.00
068.8905.00 068.8906.04 (6x) 060.8715/16.00	097.0008.00
069.6568.04	---
060.8723.-- or 060.8746.00 060.8715/16.00	---

D0080741

CS 68-FP
EW 30

BUITENKADER AUTOMATISCHE SCHUIFDEUR
DORMANT PORTE COULISSANTE AUTOMATIQUE
OUTER FRAME AUTOMATIC SLIDING DOOR
BLENDRAHMEN AUTOMATISCHE SCHIEBETUER

	A dm²/m	P dm²/m	Lm	Ix cm⁴	Wx cm³	ax mm	Iy cm⁴	Wy cm³	ay mm
005.0525.XX	33.32	13.4	7.00	11.993	3.756	27.07	20.059	4.214	29.40

X Y Y X 0

005.0525.XX

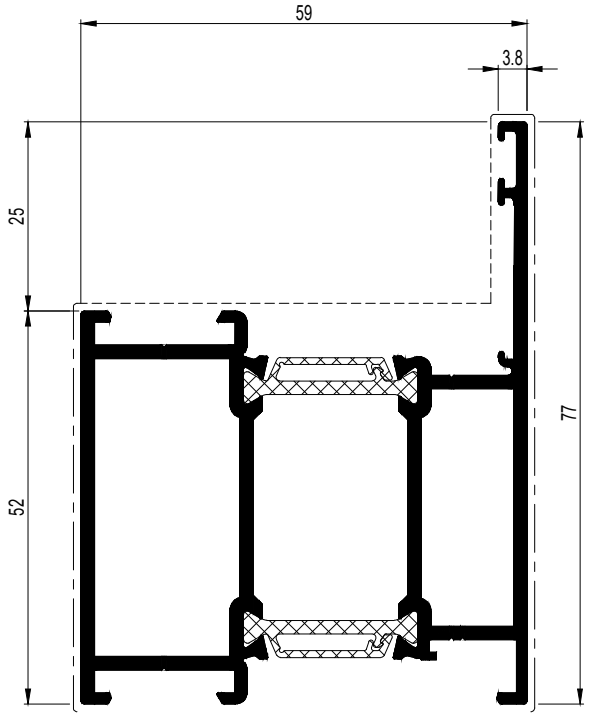

005.0525.XX	
068.7854.00 068.7855.00	095.H800.00 of-ou-or-oder 095.B500.00
068.8842.00	097.W900.00 097.P100.00 097.P200.00 of-ou-or-oder 097.0375.00
068.7854.00 068.7855.00 050.5153.-- (2x) 068.5938.-- (2x)	097.W900.00 097.P100.00 097.P200.00 of-ou-or-oder 097.0375.00
068.7854.00 068.7855.00 068.5920.-- (2x) 068.5938.-- (2x)	097.W900.00 097.P100.00 097.P200.00 of-ou-or-oder 097.0375.00
068.8732.00+(*) or 068.8742.00+(*) (*) 050.5153.-- (2x)	097.P800.00 097.P100.00 097.P200.00 of-ou-or-oder 097.0374.00
068.8737.00 050.5153.-- (2x)	097.P800.00 097.P100.00 097.P200.00 of-ou-or-oder 097.0374.00
068.8732.00+(*) or 068.8742.00+(*) (*) 068.5920.00 (2x)	097.P800.00 097.P100.00 097.P200.00 of-ou-or-oder 097.0374.00
068.8737.00 068.5920.00 (2x)	097.P800.00 097.P100.00 097.P200.00 of-ou-or-oder 097.0374.00
068.8779.00 068.8906.04 (2x) 060.8715/16.00	097.0009.00
068.8905.00 068.8906.04 (4x) 060.8715/16.00	097.0008.00
060.8723.-- or 060.8746.00 060.8715/16.00	---

C

D0080742

CS 68-FP
EW 30

BUITENKADER RAAM NAAR BINNENDRAAIEND
DORMANT FENETRE OUVRANT VERS L'INT.
OUTER FRAME WINDOW INWARD OPENING
BLENDRAHMEN FENSTER NACH INNEN OEFFNEND

	A dm²/m	P dm²/m	Lm	Ix cm⁴	Wx cm³	ax mm	Iy cm⁴	Wy cm³	ay mm
005.0139.XX	33.88	10.6	7.00	14.727	4.155	23.56	7.722	2.053	34.40
005.0141.XX	33.08	10.6	7.00	15.491	5.196	29.82	7.604	2.037	34.67

X Y Y X 0

005.0139.XX	
068.7850.00 068.7851.00	095.H800.00 of-ou-or-oder 095.B500.00
068.8840.00	097.W900.00 097.O900.00 097.P000.00 of-ou-or-oder 097.F800.00 of-ou-or-oder 097.0375.00
068.7850.00 068.7851.00 050.5153.-- (2x) 068.5938.-- (2x)	097.W900.00 097.O900.00 097.P000.00 of-ou-or-oder 097.F800.00 of-ou-or-oder 097.0375.00
068.7850.00 068.7851.00 068.5920.-- (2x) 068.5938.-- (2x)	097.W900.00 097.O900.00 097.P000.00 of-ou-or-oder 097.F800.00 of-ou-or-oder 097.0375.00
068.8730.00+(*) or 068.8740.00+(*) (*) 050.5153.--	097.P800.00 097.O900.00 097.P000.00 of-ou-or-oder 097.F800.00 of-ou-or-oder 097.0374.00
068.8735.00 050.5153.--	097.P800.00 097.O900.00 097.P000.00 of-ou-or-oder 097.F800.00 of-ou-or-oder 097.0374.00
068.8730.00+(*) or 068.8740.00+(*) (*) 068.5920.00	097.P800.00 097.O900.00 097.P000.00 of-ou-or-oder 097.F800.00 of-ou-or-oder 097.0374.00
068.8735.00 068.5920.00	097.P800.00 097.O900.00 097.P000.00 of-ou-or-oder 097.F800.00 of-ou-or-oder 097.0374.00
068.8779.00 060.8715/16.00 (2x)	097.0009.00
068.8905.00 060.8715/16.00 (2x)	097.0008.00
069.6565.04	---
060.8723.-- (2x) or 060.8746.00 (2x) 060.8715/16.00 (2x)	---

005.0141.XX	
068.7850.00 068.7851.00	095.H800.00 of-ou-or-oder 095.B500.00
068.8840.00	097.W900.00 097.O900.00 097.P000.00 of-ou-or-oder 097.F800.00
068.7850.00 068.7851.00 050.5153.-- (2x) 068.5938.-- (2x)	097.W900.00 097.O900.00 097.P000.00 of-ou-or-oder 097.F800.00
068.7850.00 068.7851.00 068.5920.-- (2x) 068.5938.-- (2x)	097.W900.00 097.O900.00 097.P000.00 of-ou-or-oder 097.F800.00
068.8730.00+(*) or 068.8740.00+(*) (*) 050.5153.--	097.P800.00 097.O900.00 097.P000.00 of-ou-or-oder 097.F800.00 of-ou-or-oder 097.0374.00
068.8735.00 050.5153.--	097.P800.00 097.O900.00 097.P000.00 of-ou-or-oder 097.F800.00 of-ou-or-oder 097.0374.00
068.8730.00+(*) or 068.8740.00+(*) (*) 068.5920.00	097.P800.00 097.O900.00 097.P000.00 of-ou-or-oder 097.F800.00 of-ou-or-oder 097.0374.00
068.8735.00 068.5920.00	097.P800.00 097.O900.00 097.P000.00 of-ou-or-oder 097.F800.00 of-ou-or-oder 097.0374.00
068.8779.00 060.8715/16.00 (2x)	097.0009.00
068.8905.00 060.8715/16.00 (2x)	---
069.6565.04	---
060.8723.-- (2x) or 060.8746.00 (2x) 060.8715/16.00 (2x)	---

005.0139.XX

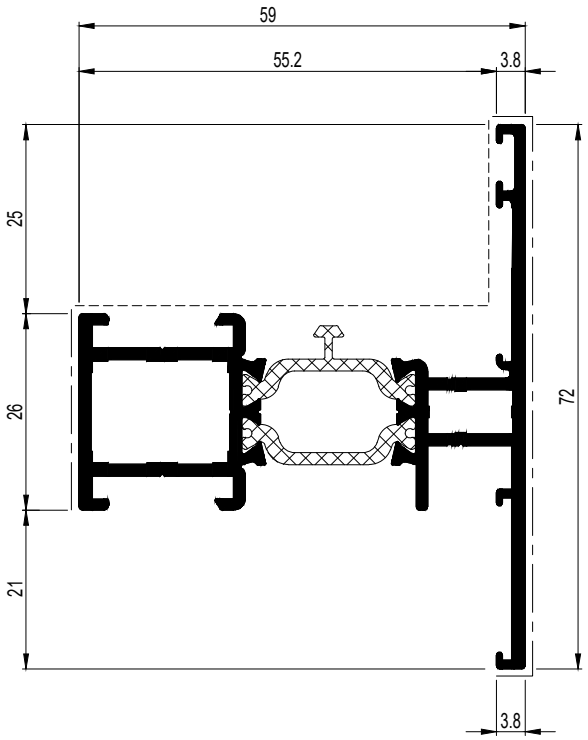

005.0141.XX

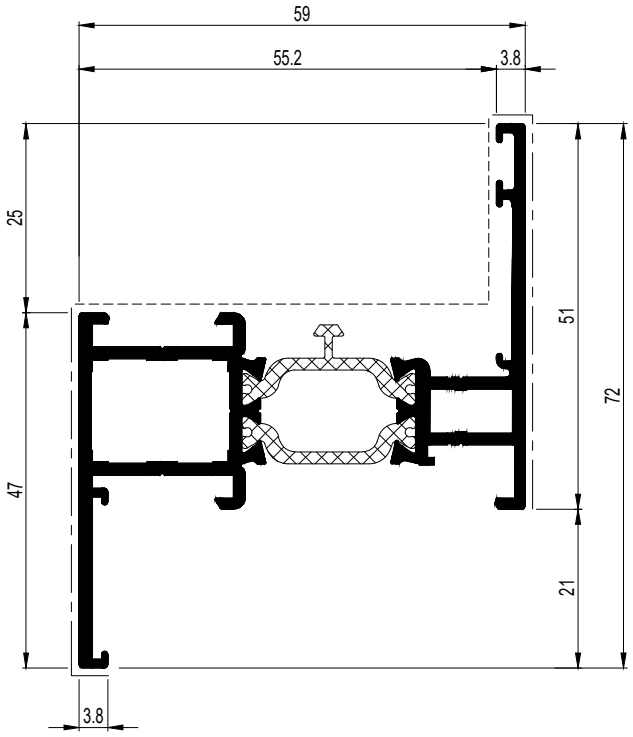

D0080743

C

CS 68-FP
EW 30

BUITENKADER VERBORGEN ONTWATERING
DORMANT DRAINAGE CACHE
OUTER FRAME HIDDEN DRAINAGE
BLENDRAHMEN VERDECKTER ENTWAESSERUNG

	A dm²/m	P dm²/m	Lm	Ix cm⁴	Wx cm³	ax mm	Iy cm⁴	Wy cm³	ay mm
005.0438.XX	33.92	10.7	7.00	15.632	4.168	21.50	13.110	3.135	34.19
005.2439.XX	36.62	13.3	7.00	19.737	5.478	22.97	23.238	4.825	40.84

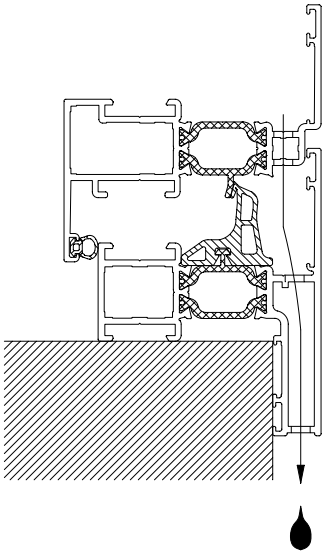

005.0438.XX

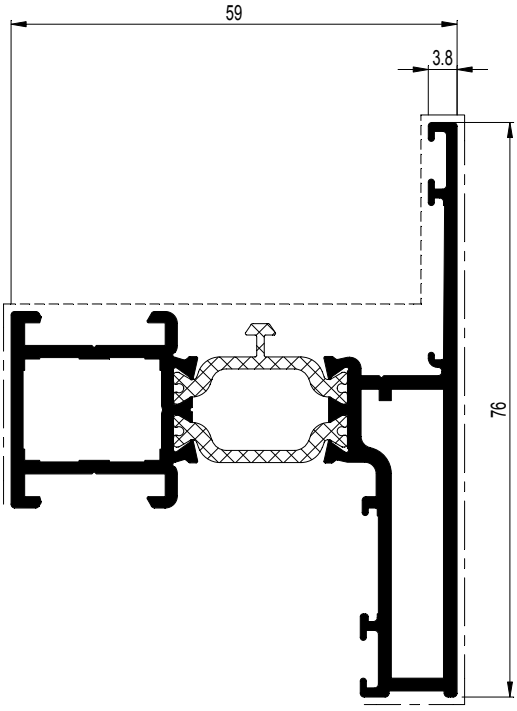

005.2439.XX

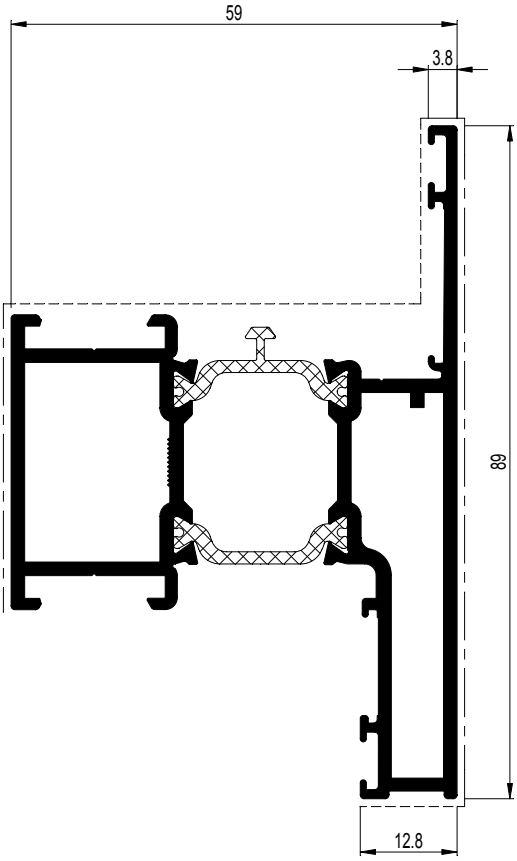

005.0438.XX	
068.7850.00 068.8090.00	095.H800.00 of-ou-or-oder 095.B500.00
069.6566.04	---
060.8723 or 8746.00 060.8724.00 060.8715/16.00	---

005.2439.XX	
068.7952.00 068.8091.00	095.H800.00 of-ou-or-oder 095.B500.00
069.6566.04	---
060.8723 or 8746.00 060.8724.00 060.8715/16.00	---

D0080745

C

CS 68-FP
EW 30

BUITENKADER VERBORGEN ONTWATERING
DORMANT DRAINAGE CACHE
OUTER FRAME HIDDEN DRAINAGE
BLENDRAHMEN VERDECKTER ENTWAESSERUNG

	A dm²/m	P dm²/m	Lm	Ix cm⁴	Wx cm³	ax mm	Iy cm⁴	Wy cm³	ay mm
008.0514.XX	36.04	12.8	7.00	19.012	4.196	22.69	19.235	5.062	38.00
008.0540.XX	38.66	15.4	7.00	24.129	5.521	24.30	32.848	7.382	44.50

X Y Y X 0

008.0514.XX

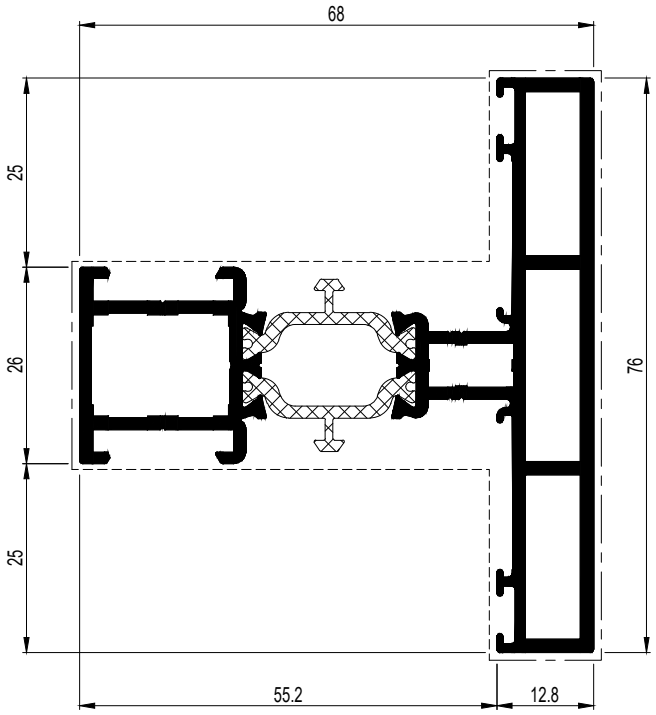

008.0540.XX

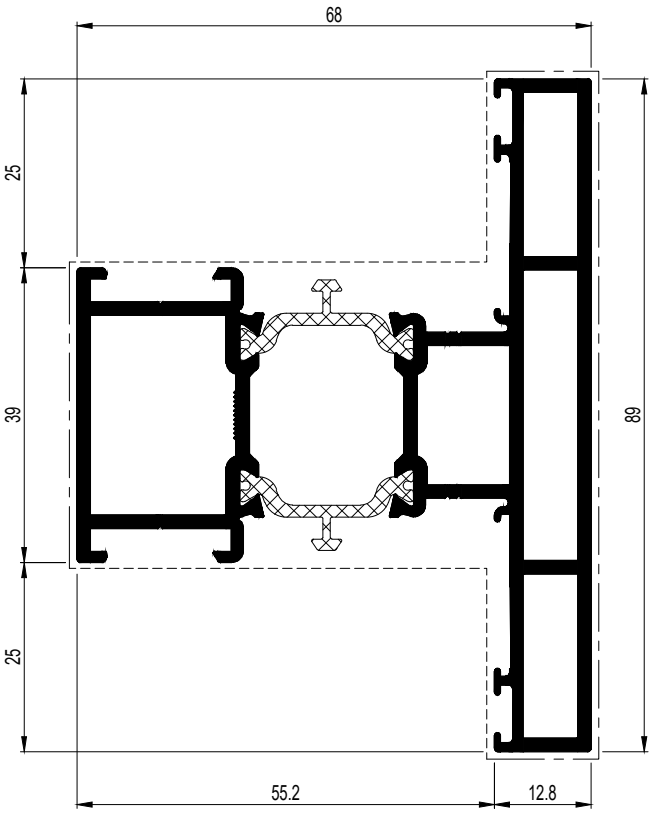

008.0514.XX	
068.7850.00 068.7851.00	095.H800.00 of-ou-or-oder 095.B500.00
068.7851.00	097.W900.00 097.O900.00 097.P000.00 of-ou-or-oder 097.0375.00
068.7850.00 068.7851.00 050.5153.-- (2x) 068.5938.-- (2x)	097.W900.00 097.O900.00 097.P000.00 of-ou-or-oder 097.0375.00
068.7850.00 068.7851.00 068.5920.-- (2x) 068.5938.-- (2x)	097.W900.00 097.O900.00 097.P000.00 of-ou-or-oder 097.0375.00
068.8730.00+(*) or 068.8740.00+(*) (*) 050.5153.--	097.P800.00 097.O900.00 097.P000.00 of-ou-or-oder 097.0374.00
068.8730.00 050.5153.--	097.P800.00 097.O900.00 097.P000.00 of-ou-or-oder 097.0374.00
068.8730.00+(*) or 068.8740.00+(*) (*) 068.5920.--	097.P800.00 097.O900.00 097.P000.00 of-ou-or-oder 097.0374.00
068.8730.00 068.5920.--	097.P800.00 097.O900.00 097.P000.00 of-ou-or-oder 097.0374.00
069.6570.04	---

008.0540.XX	
068.7952.00 068.7853.00	095.H800.00 of-ou-or-oder 095.B500.00
068.7853.00	097.W900.00 097.P100.00 097.P200.00 of-ou-or-oder 097.0375.00
068.7952.00 068.7853.00 050.5153.-- (2x) 068.5938.-- (2x)	097.W900.00 097.P100.00 097.P200.00 of-ou-or-oder 097.0375.00
068.7952.00 068.7853.00 068.5920.-- (2x) 068.5938.-- (2x)	097.W900.00 097.P100.00 097.P200.00 of-ou-or-oder 097.0375.00
068.8731.00+(*) or 068.8741.00+(*) (*) 050.5153.-- 2x	097.P800.00 097.P100.00 097.P200.00 of-ou-or-oder 097.0374.00
068.8736.00 050.5153.-- (2x)	097.P800.00 097.P100.00 097.P200.00 of-ou-or-oder 097.0374.00
068.8731.00+(*) or 068.8741.00+(*) (*) 068.5920.-- (2x)	097.P800.00 097.P100.00 097.P200.00 of-ou-or-oder 097.0374.00
068.8736.00 068.5920.-- (2x)	097.P800.00 097.P100.00 097.P200.00 of-ou-or-oder 097.0374.00
069.6571.04	---

D0080746

C

CS 68-FP
EW 30

BUITENKADER RAAM NAAR BINNENDRAAIEND
DORMANT FENETRE OUVRANT VERS L'INT.
OUTER FRAME WINDOW INWARD OPENING
BLENDRAHMEN FENSTER NACH INNEN OEFFNEND

	A dm²/m	P dm²/m	Lm	Ix cm⁴	Wx cm³	ax mm	Iy cm⁴	Wy cm³	ay mm
005.0446.XX	38.22	11.9	7.00	38.088	7.586	49.39	6.384	1.774	15.01
005.0447.XX	43.67	15.7	7.00	49.134	8.721	43.26	14.268	3.525	35.52

005.0447.XX	
068.7850.00 068.7851.00	095.H800.00 of-ou-or-oder 095.B500.00
068.8840.00	097.0375.00
068.7850.00 068.7851.00 050.5153.-- (2x) 068.5938.-- (2x)	097.0375.00
068.7850.00 068.7851.00 068.5920.-- (2x) 068.5938.-- (2x)	097.0375.00
068.8730.00+(*) or 068.8740.00+(*) (*) 050.5153.--	097.0374.00
068.8735.00 050.5153.--	097.0374.00
068.8730.00+(*) or 068.8740.00+(*) (*) 068.5920.00	097.0374.00
068.8735.00 068.5920.00	097.0374.00
068.8779.00 060.8715/16.00 (2x)	097.0009.00
068.8905.00 060.8715/16.00 (2x)	097.0008.00
069.6565.04	---
060.8723.-- (2x) or 060.8746.00 (2x) 060.8715/16.00 (2x)	---

005.0447.XX

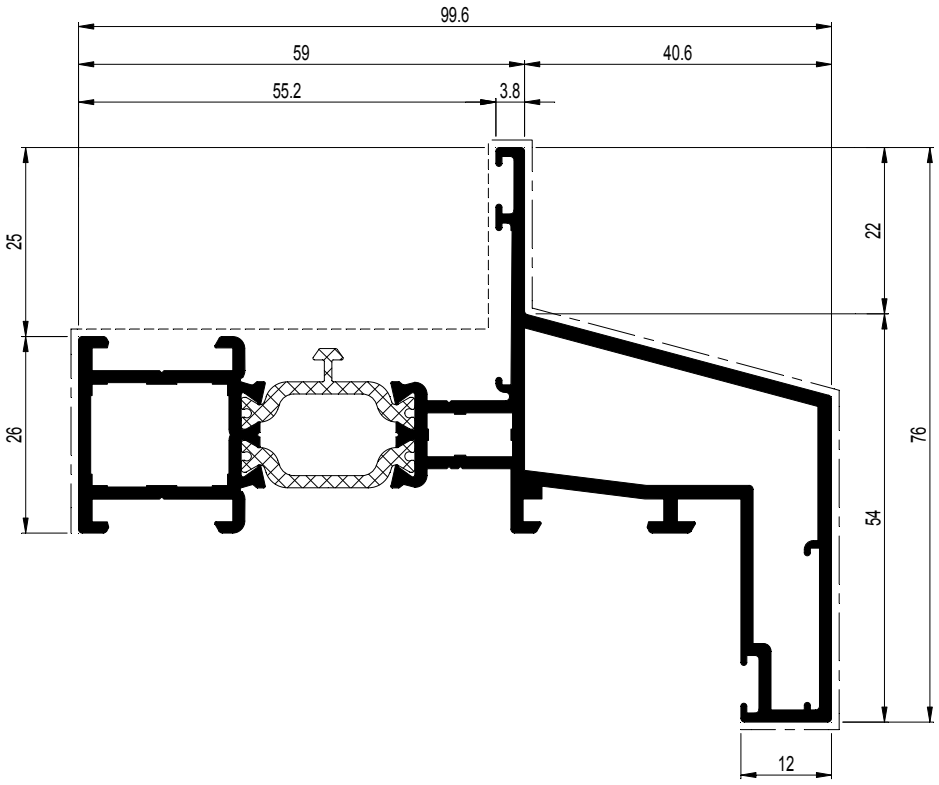

005.0446.XX	
068.7850.00 068.7851.00	095.H800.00 of-ou-or-oder 095.B500.00
068.8840.00	097.0375.00
068.7850.00 068.7851.00 050.5153.-- (2x) 068.5938.-- (2x)	097.0375.00
068.7850.00 068.7851.00 068.5920.-- (2x) 068.5938.-- (2x)	097.0375.00
068.8730.00+(*) or 068.8740.00+(*) (*) 050.5153.--	097.0374.00
068.8735.00 050.5153.--	097.0374.00
068.8730.00+(*) or 068.8740.00+(*) (*) 068.5920.00	097.0374.00
068.8735.00 068.5920.00	097.0374.00
068.8779.00 060.8715/16.00	097.0009.00
068.8905.00 060.8715/16.00	097.0008.00
069.6565.04	---
060.8723.-- or 060.8746.00 060.8715/16.00	---

005.0446.XX

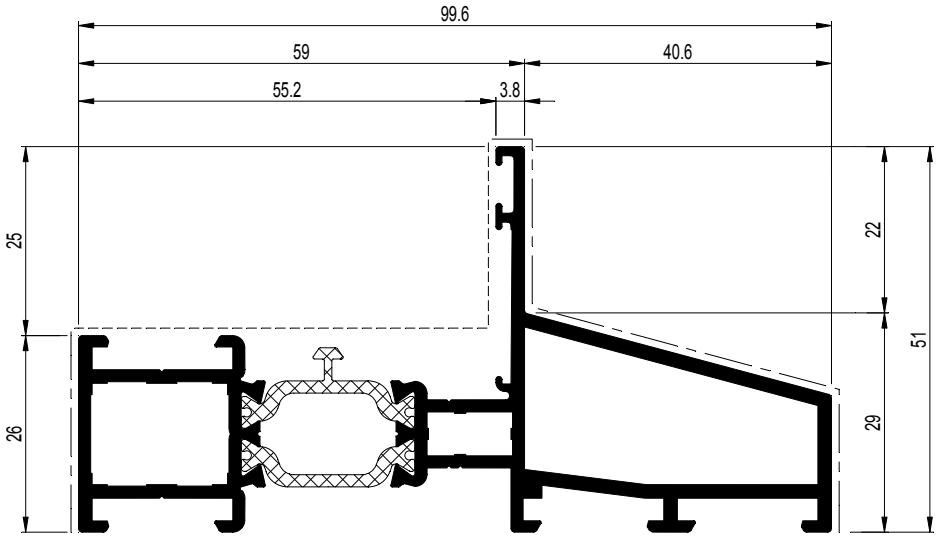

C

D0080748

CS 68-FP
EW 30

BUITENKADER RAAM NAAR BINNENDRAAIEND
DORMANT FENETRE OUVRANT VERS L'INT.
OUTER FRAME WINDOW INWARD OPENING
BLENDRAHMEN FENSTER NACH INNEN OEFFNEND

	A dm²/m	P dm²/m	Lm	Ix cm⁴	Wx cm³	ax mm	Iy cm⁴	Wy cm³	ay mm
005.0448.XX	44.19	16.0	7.00	74.740	11.811	63.28	15.920	3.695	20.92

X Y Y X 0

005.0448.XX

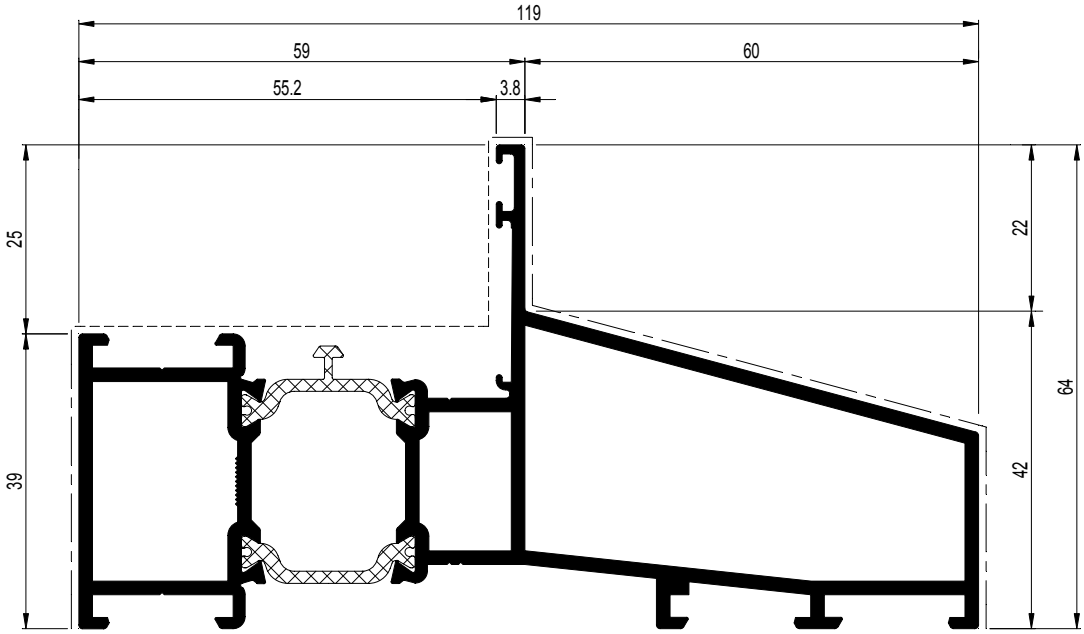

005.0448.XX	
068.7952.00 068.7853.00	095.H800.00 of-ou-or-oder 095.B500.00
068.8841.00	097.0375.00
068.7952.00 068.7853.00 050.5153.-- (2x) 068.5938.-- (2x)	097.0375.00
068.7952.00 068.7853.00 068.5920.-- (2x) 068.5938.-- (2x)	097.0375.00
068.8731.00+(*) or 068.8741.00+(*) (*) 050.5153.-- (2x)	097.0374.00
068.8736.00 050.5153.-- (2x)	097.0374.00
068.8731.00+(*) or 068.8741.00+(*) (*) 068.5920.00 (2x)	097.0374.00
068.8736.00 068.5920.00 (2x)	097.0374.00
068.8779.00 068.8906.04 060.8715/16.00	097.0009.00
068.8905.00 068.8906.04 (2x) 060.8715/16.00	097.0008.00
069.6566.04	---
060.8723.-- or 060.8746.00 060.8715/16.00	---

D0080749

CS 68-FP
EW 30

BUITENKADER MET AANSLAG
DORMANT AVEC BUTEE
OUTER FRAME BUTT-STRIP
BLENDRAHMEN MIT ANSCHLAG

	A dm²/m	P dm²/m	Lm	Ix cm⁴	Wx cm³	ax mm	Iy cm⁴	Wy cm³	ay mm
005.1449.XX	50.21	19.7	7.00	97.337	15.525	56.30	27.442	5.807	41.74

X Y Y X 0

005.1449.XX

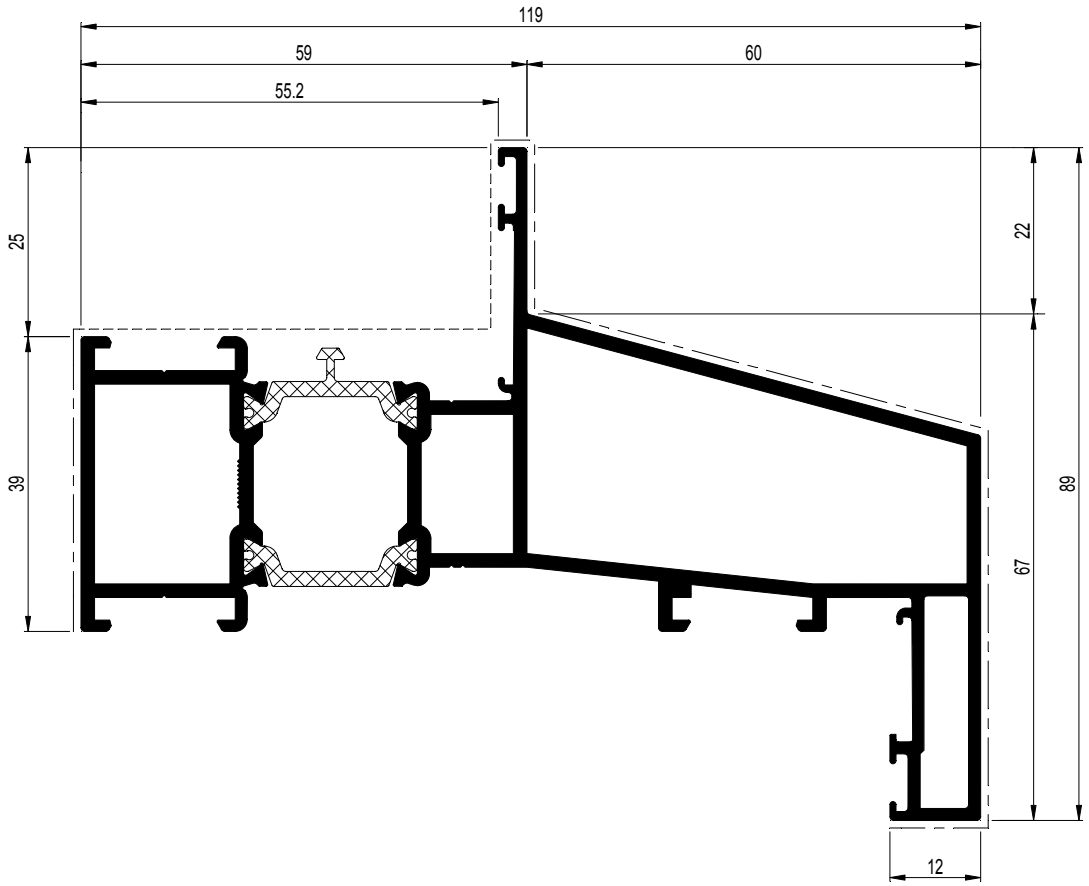

005.1449.XX	
068.7952.00 068.7853.00	095.H800.00 of-ou-or-oder 095.B500.00
068.8841.00	097.0375.00
068.7952.00 068.7853.00 050.5153.-- (2x) 068.5938.-- (2x)	097.0375.00
068.7952.00 068.7853.00 068.5920.-- (2x) 068.5938.-- (2x)	097.0375.00
068.8731.00+(*) or 068.8741.00+(*) (*) 050.5153.-- (2x)	097.0374.00
068.8731.00+(*) or 068.8741.00+(*) (*) 068.5920.00 (2x)	097.0374.00
068.8779.00 068.8906.04 060.8715/16.00 (2x)	097.0009.00
068.8905.00 068.8906.04 (2x) 060.8715/16.00 (2x)	097.0008.00
069.6566.04	---
060.8723.-- (2x) or 060.8746.00 (2x) 060.8715/16.00 (2x)	---

C

D0080750

CS 68-FP
EW 30

BUITENKADER RAAM NAAR BINNENDRAAIEND
DORMANT FENETRE OUVRANT VERS L'INT.
OUTER FRAME WINDOW INWARD OPENING
BLENDRAHMEN FENSTER NACH INNEN OEFFNEND

	A dm²/m	P dm²/m	Lm	Ix cm⁴	Wx cm³	ax mm	Iy cm⁴	Wy cm³	ay mm
005.0452.XX	42.51	14.7	7.00	61.960	10.764	57.56	15.625	3.641	21.08

X Y Y X 0

005.0452.XX

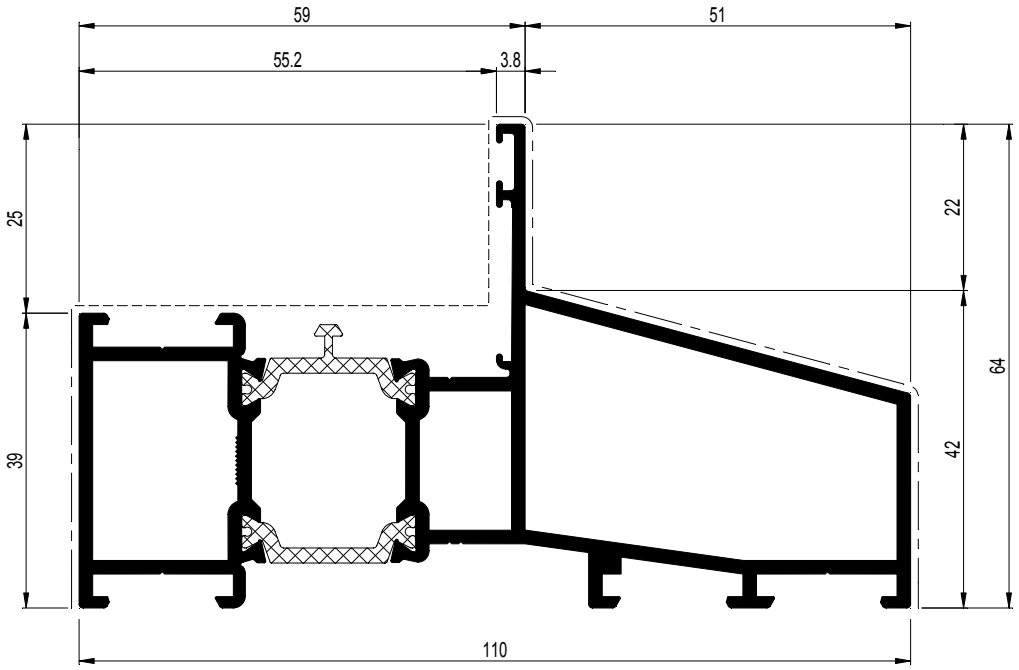

005.0452.XX	
068.7952.00 068.7853.00	095.H800.00 of-ou-or-oder 095.B500.00
068.8841.00	097.0375.00
068.7952.00 068.7853.00 050.5153.-- (2x) 068.5938.-- (2x)	097.0375.00
068.7952.00 068.7853.00 068.5920.-- (2x) 068.5938.-- (2x)	097.0375.00
068.8731.00+(*) or 068.8741.00+(*) (*) 050.5153.-- (2x)	097.0374.00
068.8736.00 050.5153.-- (2x)	097.0374.00
068.8731.00+(*) or 068.8741.00+(*) (*) 068.5920.00 (2x)	097.0374.00
068.8736.00 068.5920.00 (2x)	097.0374.00
068.8779.00 068.8906.04 060.8715/16.00	097.0009.00
068.8905.00 068.8906.04 (2x) 060.8715/16.00	097.0008.00
069.6566.04	---
060.8723.-- or 060.8746.00 060.8715/16.00	---

C

D0080751

CS 68-FP
EW 30

BUITENKADER RAAM NAAR BINNENDRAAIEND
DORMANT FENETRE OUVRANT VERS L'INT.
OUTER FRAME WINDOW INWARD OPENING
BLENDRAHMEN FENSTER NACH INNEN OEFFNEND

Reynaers Aluminium

	A dm²/m	P dm²/m	Lm	Ix cm⁴	Wx cm³	ax mm	Iy cm⁴	Wy cm³	ay mm
005.1455.XX	39.72	13.6	7.00	45.688	9.413	48.54	14.876	3.501	21.52
005.1456.XX	43.14	15.6	7.00	55.385	10.711	44.29	22.520	4.934	38.85

X Y Y X 0

005.1456.XX	
068.7952.00 068.7853.00	095.H800.00 of-ou-or-oder 095.B500.00
068.8841.00	097.0375.00
068.7952.00 068.7853.00 050.5153.-- (2x) 068.5938.-- (2x)	097.0375.00
068.7952.00 068.7853.00 068.5920.-- (2x) 068.5938.-- (2x)	097.0375.00
068.8731.00+(*) or 068.8741.00+(*) (*) 050.5153.-- (2x)	097.0374.00
068.8736.00 050.5153.-- (2x)	097.0374.00
068.8731.00+(*) or 068.8741.00+(*) (*) 068.5920.00 (2x)	097.0374.00
068.8736.00 068.5920.00 (2x)	097.0374.00
068.8779.00+(*) 068.8906.04	097.0009.00
068.8905.00+(*) 068.8906.04	097.0008.00
069.6566.04	---
060.8723.-- or 060.8746.00 060.8715/16.00 (*)	---

005.1455.XX	
068.7952.00 068.7853.00	095.H800.00 of-ou-or-oder 095.B500.00
068.8841.00	097.0375.00
068.7952.00 068.7853.00 050.5153.-- (2x) 068.5938.-- (2x)	097.0375.00
068.7952.00 068.7853.00 068.5920.-- (2x) 068.5938.-- (2x)	097.0375.00
068.8731.00+(*) or 068.8741.00+(*) (*) 050.5153.-- (2x)	097.0374.00
068.8736.00 050.5153.-- (2x)	097.0374.00
068.8731.00+(*) or 068.8741.00+(*) (*) 068.5920.00 (2x)	097.0374.00
068.8736.00 068.5920.00 (2x)	097.0374.00
068.8779.00+(*) 068.8906.04	097.0009.00
068.8905.00+(*) 068.8906.04	097.0008.00
069.6566.04	---
060.8723.-- or 060.8746.00 060.8715/16.00 (*)	---

005.1456.XX

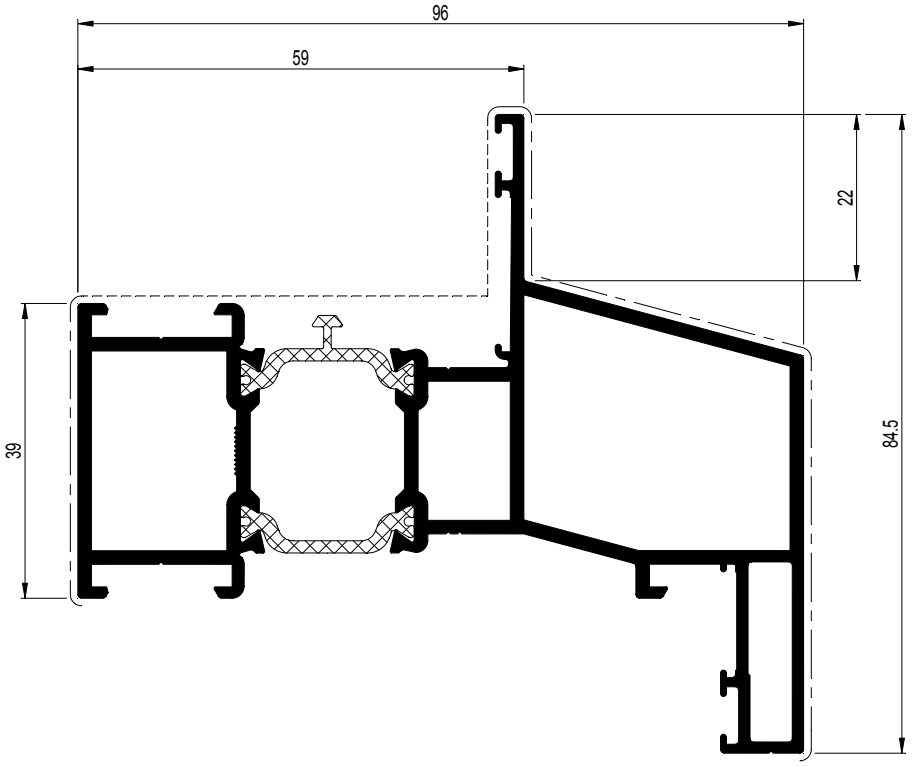

005.1455.XX

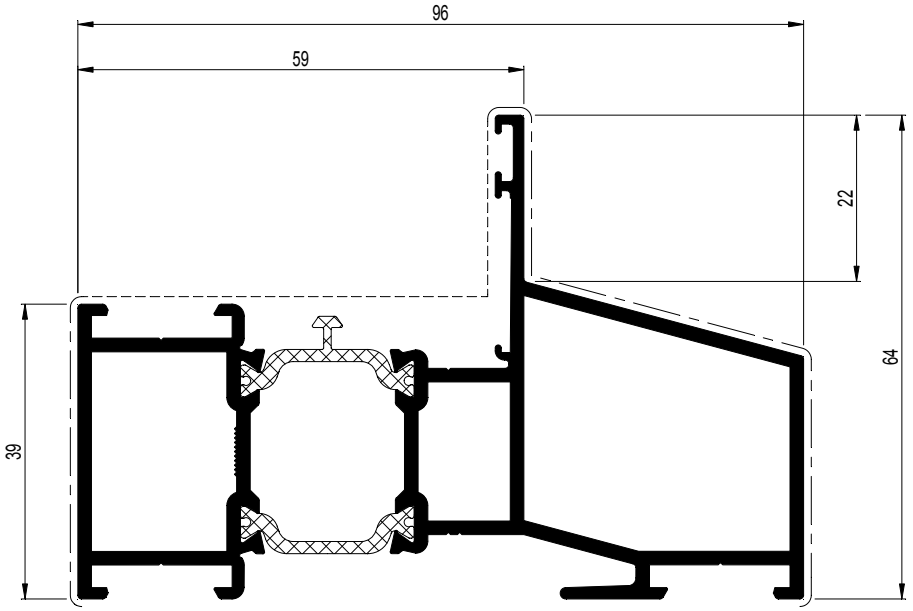

C

D0080752

CS 68-FP
EW 30

WISSELPROFIEL BUITENBEGLAZING
PROFILE INVERSION PARCLOSE
CHANGEOVER PROFILE OUTSIDE GLAZING
WECHSELPROFIL AUSSENVERGLASUNG

	A dm²/m	P dm²/m	Lm	Ix cm⁴	Wx cm³	ax mm	Iy cm⁴	Wy cm³	ay mm
005.1101.XX	26.95	7.3	7.00	13.745	4.079	33.70	8.403	2.160	20.09

X
Y — Y
X 0

005.1101.XX

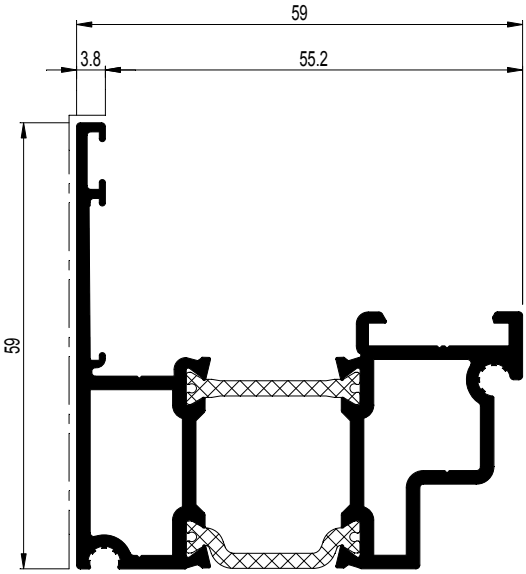

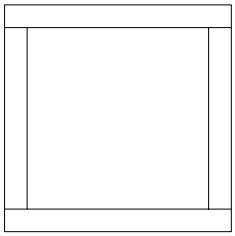

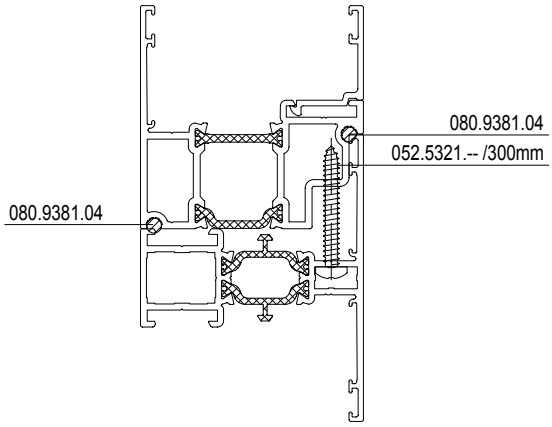

C

D0080755

CS 68-FP
EW 30

VLEUGEL RAAM NAAR BINNENDRAAIEND
OUVRANT FENETRE OUVRANT VERS L'INTERIEUR
VENT WINDOW INWARD OPENING
FLUEGEL FENSTER NACH INNEN OEFFNEND

	A dm²/m	P dm²/m	Lm	Ix cm⁴	Wx cm³	ax mm	Iy cm⁴	Wy cm³	ay mm
005.0102.XX	32.58	11.1	7.00/5.00	18.351	5.051	36.33	6.889	1.908	31.90
005.0192.XX	35.54	13.7	7.00/5.00	24.588	7.097	34.65	14.275	3.358	38.48

X Y Y X 0

005.0102.XX

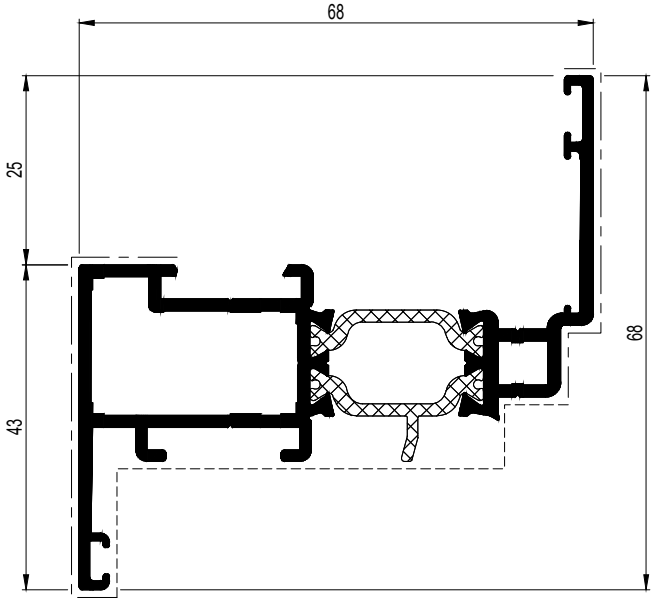

005.0192.XX

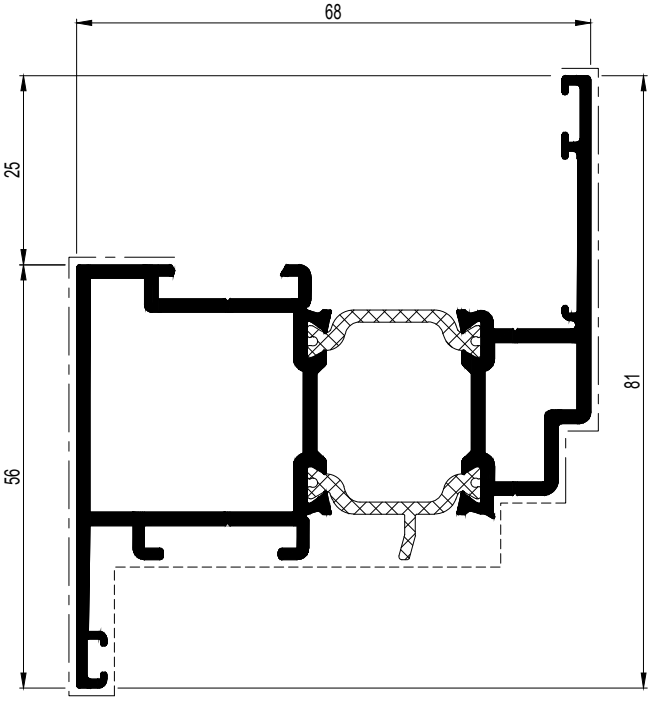

	005.0102.XX	
	068.7958.00 068.7859.00	095.H800.00 of-ou-or-oder 095.B500.00
	068.8844.00	097.W900.00 097.O900.00 097.P000.00 of-ou-or-oder 097.F800.00 of-ou-or-oder 097.0375.00
	068.7958.00 068.7859.00 050.5153.-- (2x) 068.5938.-- (2x)	097.W900.00 097.O900.00 097.P000.00 of-ou-or-oder 097.F800.00 of-ou-or-oder 097.0375.00
	068.7958.00 068.7859.00 068.5920.-- (2x) 068.5938.-- (2x)	097.W900.00 097.O900.00 097.P000.00 of-ou-or-oder 097.F800.00 of-ou-or-oder 097.0375.00
	068.8876.00 060.8715/16.00	097.0008.00
	069.6565.04	---
	060.8723.-- or 060.8746.00 060.8715/16.00	---

	005.0192.XX	
	068.7860.00 068.7861.00	095.H800.00 of-ou-or-oder 095.B500.00
	068.8845.00	097.W900.00 097.P100.00 097.P200.00 of-ou-or-oder 097.0375.00
	068.7860.00 068.7861.00 050.5153.-- (2x) 068.5938.-- (2x)	097.W900.00 097.P100.00 097.P200.00 of-ou-or-oder 097.0375.00
	068.7860.00 068.7861.00 068.5920.-- (2x) 068.5938.-- (2x)	097.W900.00 097.P100.00 097.P200.00 of-ou-or-oder 097.0375.00
	068.8876.00 068.8906.04 (2x) 060.8715/16.00	097.0008.00
	069.6566.04	---
	060.8723.-- or 060.8746.00 060.8715/16.00	---

C

D0080761

CS 68-FP
EW 30

VLEUGEL RAAM (DEUR) NAAR BINNENDRAAIEND
OUVRANT FENETRE (PORTE) OUVRANT VERS L'INTERIEUR
VENT WINDOW (DOOR) INWARD OPENING
FLUEGEL FENSTER (TUER) NACH INNEN OEFFNEND

	A dm²/m	P dm²/m	Lm	Ix cm⁴	Wx cm³	ax mm	Iy cm⁴	Wy cm³	ay mm
005.0112.XX	38.14	16.4	7.00	29.109	8.548	33.95	26.035	5.318	45.05
005.0121.XX	40.74	18.9	7.00	33.596	9.718	33.43	43.039	7.768	51.60

X Y Y X 0

005.0112.XX

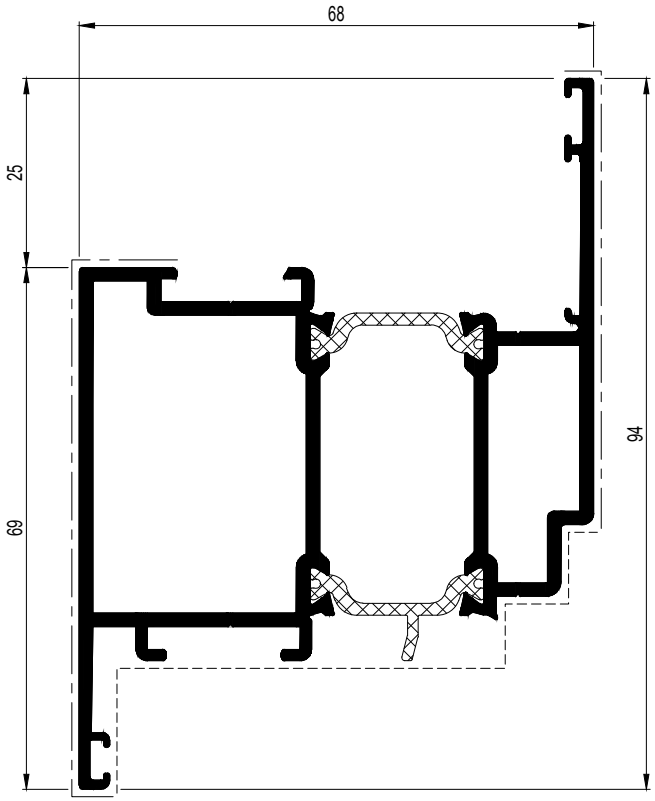

005.0121.XX

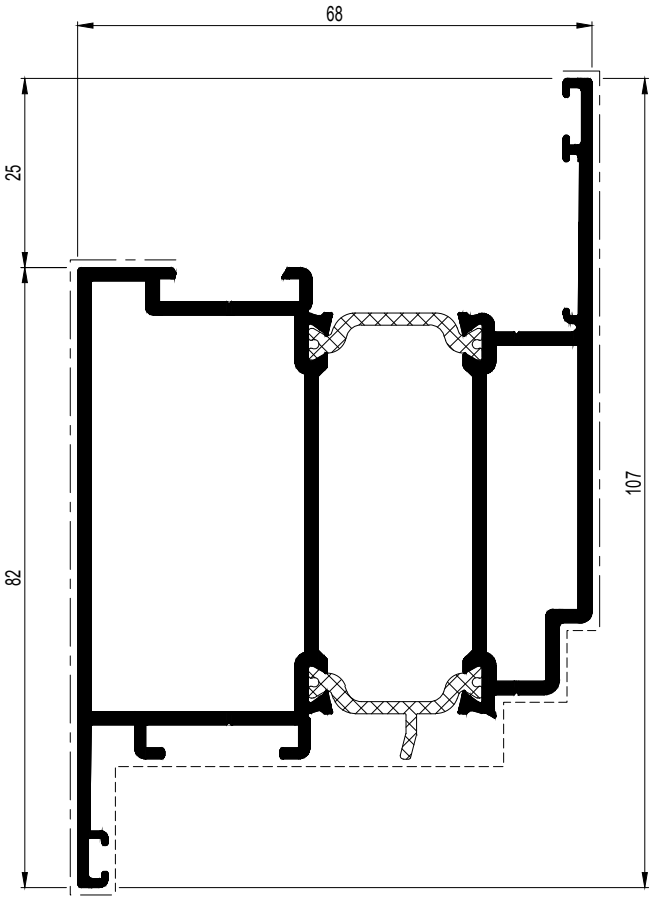

005.0112.XX	
068.7746.00	095.H800.00 of-ou-or-oder 095.B500.00
068.8846.00	097.W900.00 097.P100.00 097.P200.00 of-ou-or-oder 097.0375.00
068.8876.00 068.8906.04 (4x) 060.8715/16.00	097.0008.00
069.6567.04	---
060.8723.-- or 060.8746.00 060.8715/16.00	---

005.0121.XX	
068.7747.00	095.H800.00 of-ou-or-oder 095.B500.00
068.8847.00	097.W900.00 097.P100.00 097.P200.00 of-ou-or-oder 097.0375.00
068.8876.00 068.8906.04 (6x) 060.8715/16.00	097.0008.00
069.6568.04	---
060.8723.-- or 060.8746.00 060.8715/16.00	---

D0080762

CS 68-FP
EW 30

VLEUGEL RAAM (DEUR) NAAR BINNENDRAAIEND
OUVRANT FENETRE (PORTE) OUVRANT VERS L'INTERIEUR
VENT WINDOW (DOOR) INWARD OPENING
FLUEGEL FENSTER (TUER) NACH INNEN OEFFNEND

	A dm²/m	P dm²/m	Lm	Ix cm⁴	Wx cm³	ax mm	Iy cm⁴	Wy cm³	ay mm
005.1521.XX	40.74	17.6	7.00	33.596	9.718	33.43	43.039	7.768	51.60

X Y Y X 0

005.1521.XX

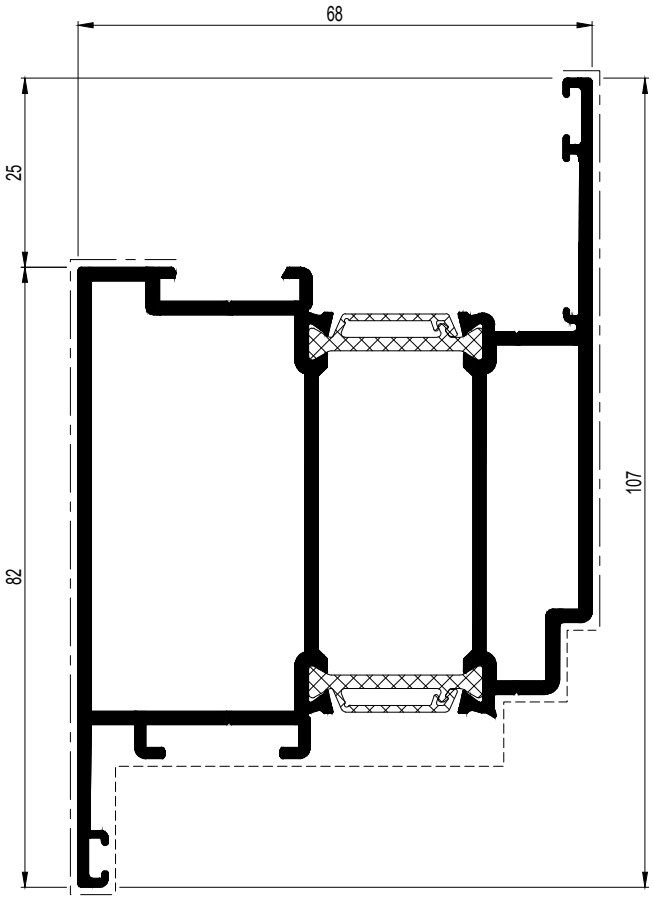

	005.1521.XX	
	068.7747.00	095.H800.00 of-ou-or-oder 095.B500.00
	068.8847.00	097.W900.00 097.P100.00 097.P200.00 of-ou-or-oder 097.0375.00
	060.8723.-- or 060.8746.00	---

C

D0080764

CS 68-FP
EW 30

VLEUGEL RAAM (DEUR) NAAR BUITENDRAAIEND
OUVRANT FENETRE (PORTE) OUVRANT VERS L'EXTERIEUR
WINDOW VENT (DOOR) OUTWARD OPENING
FENSTERFLUEGEL (TUER) NACH AUSSEN OEFFNEND

	A dm²/m	P dm²/m	Lm	Ix cm⁴	Wx cm³	ax mm	Iy cm⁴	Wy cm³	ay mm
005.0052.XX	39.25	16.9	7.00	34.980	8.921	28.79	39.568	7.461	49.97

X Y Y X 0

005.0052.XX

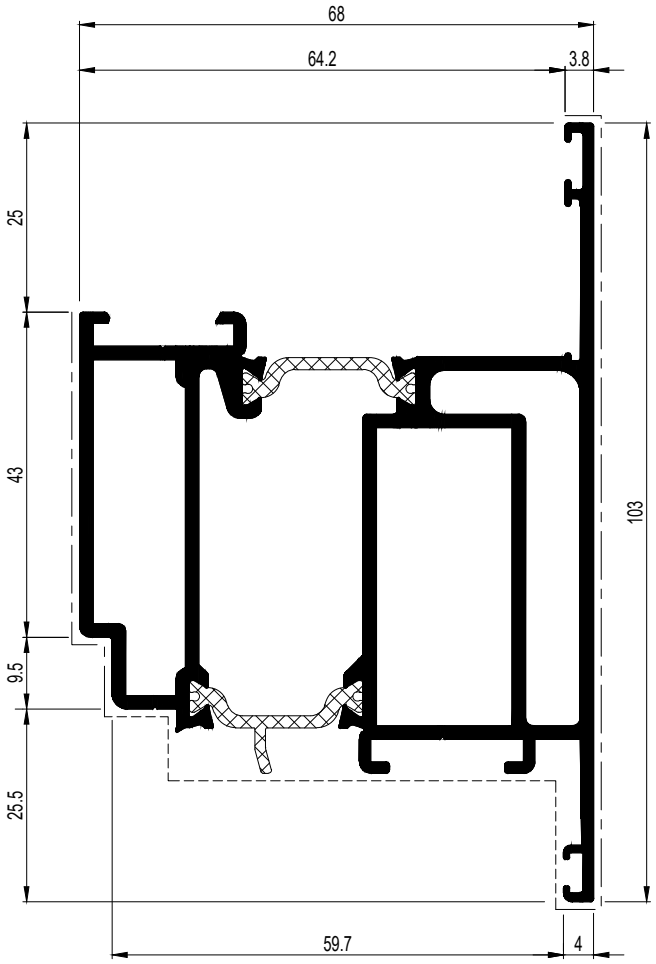

ENKEL TOEPASBAAR VOOR RAAMDEUR MET SLOT
SEULEMENT A APPLIQUER PORTE-FENETRE AVEC SERRURE
ONLY APPLICABLE FOR A WINDOW-DOOR WITH LOCK
NUR ANZUWENDEN FUR FENSTERTUER MIT SCHLOSS

005.0052.XX	
068.7771.00	095.H800.00 of-ou-or-oder 095.B500.00
068.8871.00	097.W900.00 097.P100.00 097.P200.00 of-ou-or-oder 097.0375.00
060.8723.-- or 060.8746.00	---

D0080768

C

CS 68-FP
EW 30

T-PROFIEL RAAM NAAR BINNENDRAAIEND
TRAVERSE FENETRE OUVRANT VERS L'EXTERIEUR
TRANSOM-MULLION WINDOW INWARD OPENING
SPROSSE FENSTER NACH INNEN OEFFNEND

	A dm²/m	P dm²/m	Lm	Ix cm⁴	Wx cm³	ax mm	Iy cm⁴	Wy cm³	ay mm
005.0113.XX	34.44	11.0	7.00/5.00	14.901	4.187	23.42	8.621	2.268	38.00
005.0813.XX	34.27	11.0	7.00	16.254	4.708	24.48	8.668	2.281	38.00

X Y Y X 0

005.0113.XX

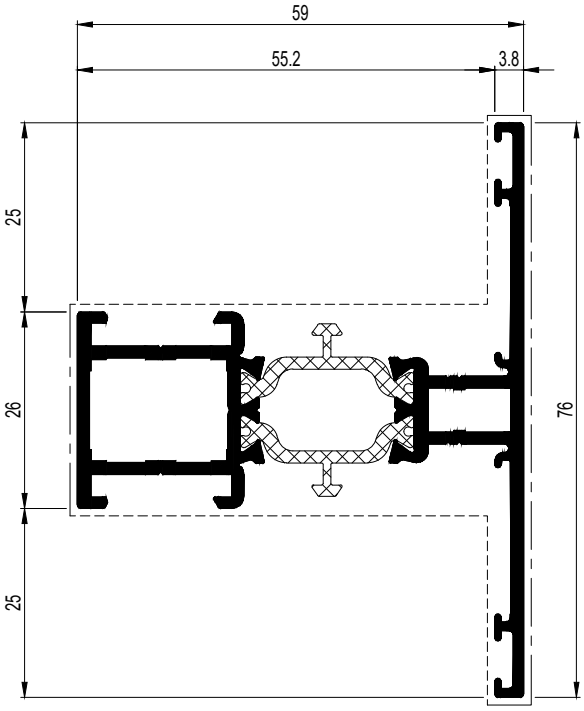

005.0813.XX

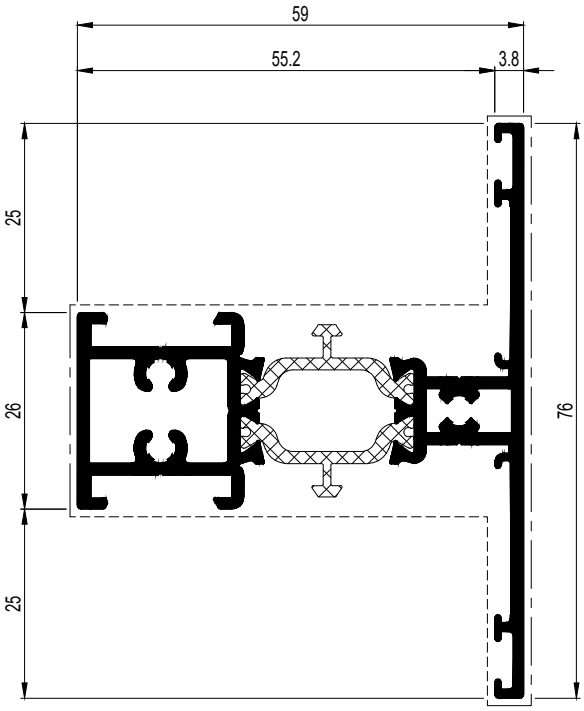

005.0113.XX	
068.7850.00 068.7851.00	095.H800.00 of-ou-or-oder 095.B500.00
068.8840.00	097.W900.00 097.O900.00 097.P000.00 of-ou-or-oder 097.0375.00
068.7850.00 068.7851.00 050.5153.-- (2x) 068.5938.-- (2x)	097.W900.00 097.O900.00 097.P000.00 of-ou-or-oder 097.0375.00
068.7850.00 068.7851.00 068.5920.-- (2x) 068.5938.-- (2x)	097.W900.00 097.O900.00 097.P000.00 of-ou-or-oder 097.0375.00
068.8730.00+(*) or 068.8740.00+(*) (*) 050.5153.--	097.P800.00 097.O900.00 097.P000.00 of-ou-or-oder 097.0374.00
068.8735.00 050.5153.--	097.P800.00 097.O900.00 097.P000.00 of-ou-or-oder 097.0374.00
068.8730.00+(*) or 068.8740.00+(*) (*) 068.5920.00	097.P800.00 097.O900.00 097.P000.00 of-ou-or-oder 097.0374.00
068.8735.00 068.5920.00	097.P800.00 097.O900.00 097.P000.00 of-ou-or-oder 097.0374.00
068.8779.00 060.8715/16.00 (2x)	097.0009.00
068.8905.00 060.8715/16.00 (2x)	097.0008.00
069.6565.04	---
060.8723.-- (2x) or 060.8746.00 (2x) 060.8715/16.00 (2x)	---

005.0813.XX	
052.5315.-- (3x)	097.0419.00
060.8723.-- (2x) or 060.8746.00 (2x)	---

C

D0080773

CS 68-FP
EW 30

T-PROFIEL RAAM NAAR BINNENDRAAIEND
TRAVERSE FENETRE OUVRANT VERS L'EXTERIEUR
TRANSOM-MULLION WINDOW INWARD OPENING
SPROSSE FENSTER NACH INNEN OEFFNEND

	A dm²/m	P dm²/m	Lm	Ix cm⁴	Wx cm³	ax mm	Iy cm⁴	Wy cm³	ay mm
005.0120.XX	36.86	13.6	7.00/5.00	18.916	5.480	24.49	16.299	3.663	44.50
005.0820.XX	36.94	13.6	7.00	20.608	6.077	25.09	16.734	3.760	44.50

X Y Y X 0

005.0120.XX

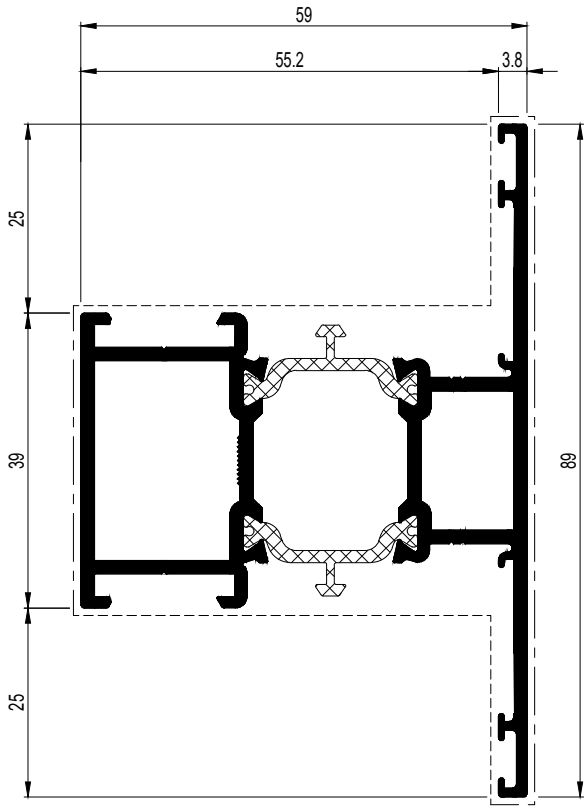

005.0820.XX

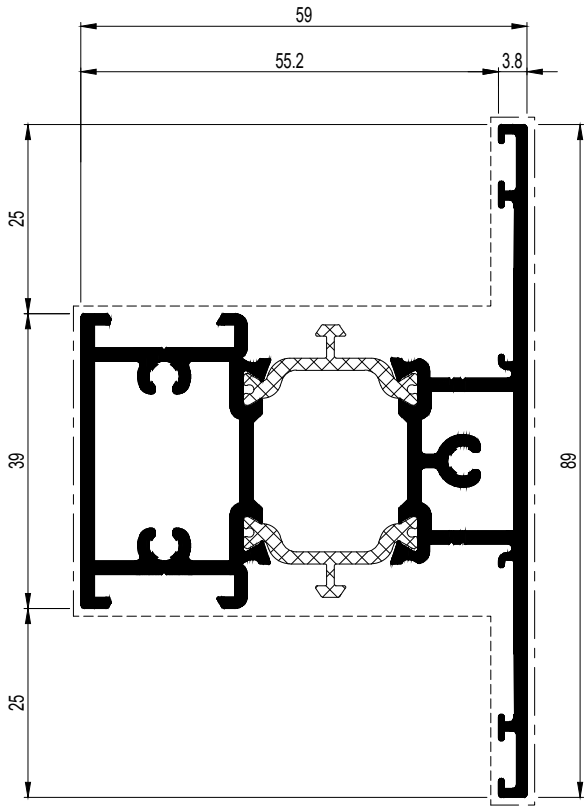

C

005.0120.XX	
068.7952.00 068.7853.00	095.H800.00 of-ou-or-oder 095.B500.00
068.8841.00	097.W900.00 097.P100.00 097.P200.00 of-ou-or-oder 097.0375.00
068.7952.00 068.7853.00 050.5153.-- (2x) 068.5938.-- (2x)	097.W900.00 097.P100.00 097.P200.00 of-ou-or-oder 097.0375.00
068.7952.00 068.7853.00 068.5920.-- (2x) 068.5938.-- (2x)	097.W900.00 097.P100.00 097.P200.00 of-ou-or-oder 097.0375.00
068.8731.00+(*) or 068.8741.00+(*) (*) 050.5153.-- (2x)	097.P800.00 097.P100.00 097.P200.00 of-ou-or-oder 097.0374.00
068.8736.00 050.5153.-- (2x)	097.P800.00 097.P100.00 097.P200.00 of-ou-or-oder 097.0374.00
068.8731.00+(*) or 068.8741.00+(*) (*) 068.5920.00 (2x)	097.P800.00 097.P100.00 097.P200.00 of-ou-or-oder 097.0374.00
068.8736.00 068.5920.00 (2x)	097.P800.00 097.P100.00 097.P200.00 of-ou-or-oder 097.0374.00
068.8779.00 068.8906.04 060.8715/16.00 (2x)	097.0009.00
068.8905.00 068.8906.04 (2x) 060.8715/16.00 (2x)	097.0008.00
069.6566.04	---
060.8723.-- (2x) or 060.8746.00 (2x) 060.8715/16.00 (2x)	---

005.0820.XX	
052.5315.-- (3x)	097.0419.00
060.8723.-- (2x) or 060.8746.00 (2x)	---

D0080774

CS 68-FP
EW 30

T-PROFIEL RAAM NAAR BINNENDRAAIEND
TRAVERSE FENETRE OUVRANT VERS L'EXTERIEUR
TRANSOM-MULLION WINDOW INWARD OPENING
SPROSSE FENSTER NACH INNEN OEFFNEND

	A dm²/m	P dm²/m	Lm	Ix cm⁴	Wx cm³	ax mm	Iy cm⁴	Wy cm³	ay mm
005.0114.XX	39.50	16.2	7.00/5.00	22.304	6.552	24.96	28.380	5.564	51.00

X Y Y X 0

005.0114.XX

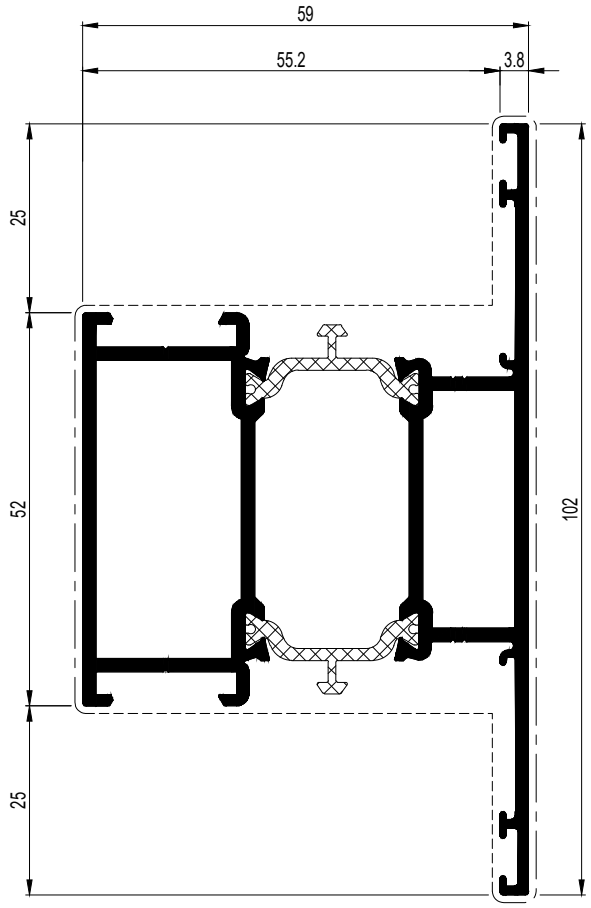

005.0114.XX	
068.7854.00 068.7855.00	095.H800.00 of-ou-or-oder 095.B500.00
068.8842.00	097.W900.00 097.P100.00 097.P200.00 of-ou-or-oder 097.0375.00
068.7854.00 068.7855.00 050.5153.-- (2x) 068.5938.-- (2x)	097.W900.00 097.P100.00 097.P200.00 of-ou-or-oder 097.0375.00
068.7854.00 068.7855.00 068.5920.-- (2x) 068.5938.-- (2x)	097.W900.00 097.P100.00 097.P200.00 of-ou-or-oder 097.0375.00
068.8732.00+(*) or 068.8742.00+(*) (*) 050.5153.-- (2x)	097.P800.00 097.P100.00 097.P200.00 of-ou-or-oder 097.0374.00
068.8737.00 050.5153.-- (2x)	097.P800.00 097.P100.00 097.P200.00 of-ou-or-oder 097.0374.00
068.8732.00+(*) or 068.8742.00+(*) (*) 068.5920.00 (2x)	097.P800.00 097.P100.00 097.P200.00 of-ou-or-oder 097.0374.00
068.8737.00 068.5920.00 (2x)	097.P800.00 097.P100.00 097.P200.00 of-ou-or-oder 097.0374.00
068.8779.00 068.8906.04 (2x) 060.8715/16.00 (2x)	097.0009.00
068.8905.00 068.8906.04 (4x) 060.8715/16.00 (2x)	097.0008.00
069.6567.04	---
060.8723.-- (2x) or 060.8746.00 (2x) 060.8715/16.00 (2x)	---

C

D0080775

CS 68-FP
EW 30

T-PROFIEL RAAM NAAR BINNENDRAAIEND
TRAVERSE FENETRE OUVRANT VERS L'EXTERIEUR
TRANSOM-MULLION WINDOW INWARD OPENING
SPROSSE FENSTER NACH INNEN OEFFNEND

	A dm²/m	P dm²/m	Lm	Ix cm⁴	Wx cm³	ax mm	Iy cm⁴	Wy cm³	ay mm
005.0814.XX	39.54	16.2	7.00	23.978	7.149	25.46	29.363	5.757	51.00
005.0823.XX	42.14	18.8	7.00	27.337	8.220	25.75	47.397	8.242	57.50

X Y Y X 0

005.0814.XX

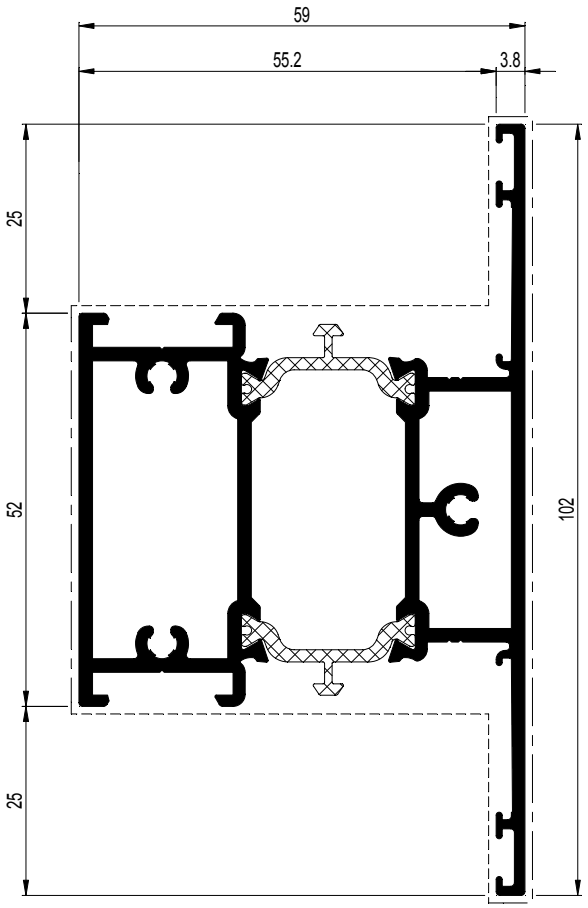

005.0823.XX

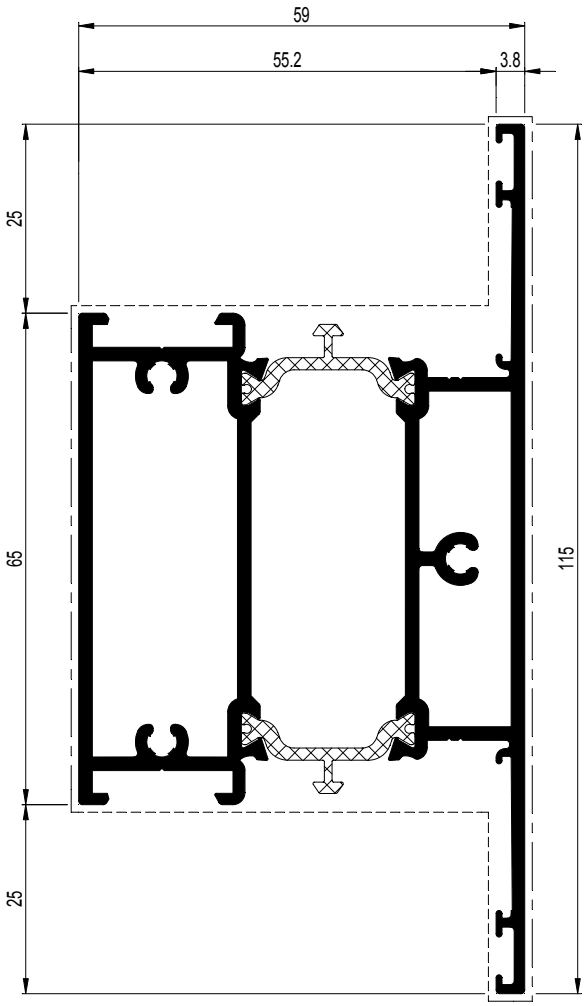

005.0814.XX	
052.5315.-- (3x)	097.0419.00
060.8723.-- (2x) or 060.8746.00 (2x)	---

005.0823.XX	
052.5315.-- (3x)	097.0419.00
060.8723.-- (2x) or 060.8746.00 (2x)	---

D0080776

CS 68-FP
EW 30

T-PROFIEL RAAM NAAR BINNENDRAAIEND
TRAVERSE FENETRE OUVRANT VERS L'EXTERIEUR
TRANSOM-MULLION WINDOW INWARD OPENING
SPROSSE FENSTER NACH INNEN OEFFNEND

	A dm²/m	P dm²/m	Lm	Ix cm⁴	Wx cm³	ax mm	Iy cm⁴	Wy cm³	ay mm
005.0123.XX	42.10	18.8	7.00	25.678	7.627	25.33	45.573	7.925	57.50

X Y Y X 0

005.0123.XX

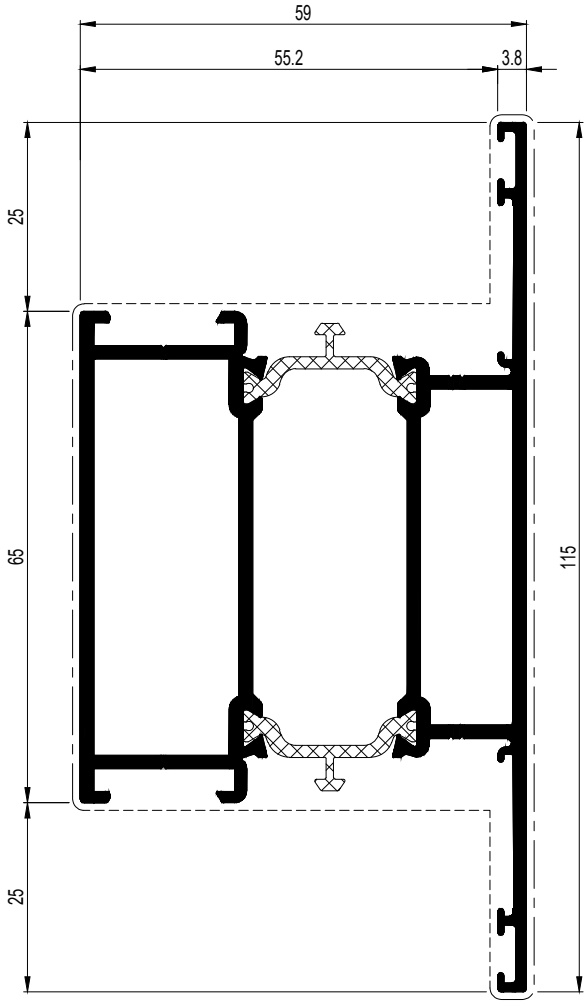

005.0123.XX	
068.7856.00 068.7857.00	095.H800.00 of-ou-or-oder 095.B500.00
068.8843.00	097.W900.00 097.P100.00 097.P200.00 of-ou-or-oder 097.0375.00
068.7856.00 068.7857.00 050.5153.-- (2x) 068.5938.-- (2x)	097.W900.00 097.P100.00 097.P200.00 of-ou-or-oder 097.0375.00
068.7856.00 068.7857.00 068.5920.-- (2x) 068.5938.-- (2x)	097.W900.00 097.P100.00 097.P200.00 of-ou-or-oder 097.0375.00
068.8733.00+(*) or 068.8743.00+(*) (*) 050.5153.-- (2x)	097.P800.00 097.P100.00 097.P200.00 of-ou-or-oder 097.0374.00
068.8738.00 050.5153.-- (2x)	097.P800.00 097.P100.00 097.P200.00 of-ou-or-oder 097.0374.00
068.8733.00+(*) or 068.8743.00+(*) (*) 068.5920.00 (2x)	097.P800.00 097.P100.00 097.P200.00 of-ou-or-oder 097.0374.00
068.8738.00 068.5920.00 (2x)	097.P800.00 097.P100.00 097.P200.00 of-ou-or-oder 097.0374.00
068.8779.00 068.8906.04 (3x) 060.8715/16.00 (2x)	097.0009.00
068.8905.00 068.8906.04 (6x) 060.8715/16.00 (2x)	097.0008.00
069.6568.04	---
060.8723.-- (2x) or 060.8746.00 (2x) 060.8715/16.00 (2x)	---

C

D0080777

CS 68-FP
EW 30

T-PROFIEL VERSTERKT
TRAVERSE RENFORCEE
TRANSOM-MULLION REINFORCED
SPROSSE VERSTAERKT

	A dm²/m	P dm²/m	Lm	Ix cm⁴	Wx cm³	ax mm	Iy cm⁴	Wy cm³	ay mm
005.1100.XX	44.26	20.7	7.00	52.808	10.418	45.28	22.155	4.956	44.70

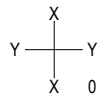

005.1100.XX

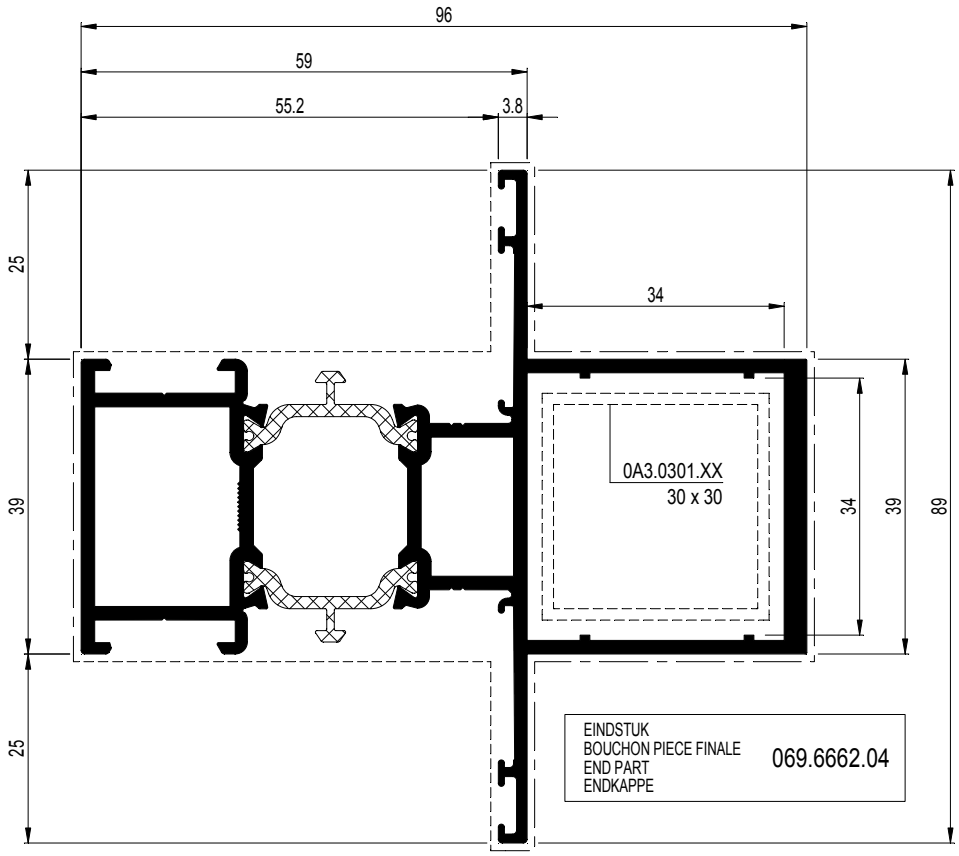

005.1100.XX + Alu 0A3.0301.XX : Ix = 55.129
005.1100.XX + Steel 30x30x3 : Ix = 63.82

005.1100.XX	
068.7952.00 068.7853.00	095.H800.00 of-ou-or-oder 095.B500.00
068.8841.00	097.0375.00
068.7952.00 068.7853.00 050.5153.-- (2x) 068.5938.-- (2x)	097.0375.00
068.7952.00 068.7853.00 068.5920.-- (2x) 068.5938.-- (2x)	097.0375.00
068.8731.00+(*) or 068.8741.00+(*) (*) 050.5153.-- (2x)	097.0374.00
068.8736.00 050.5153.-- (2x)	097.0374.00
068.8731.00+(*) or 068.8741.00+(*) (*) 068.5920.00 (2x)	097.0374.00
068.8736.00 068.5920.00 (2x)	097.0374.00
068.8779.00 068.8906.04 060.8715/16.00 (2x)	097.0009.00
068.8905.00 068.8906.04 (2x) 060.8715/16.00 (2x)	097.0008.00
069.6566.04	---
060.8723.-- (2x) or 060.8746.00 (2x) 060.8715/16.00 (2x)	---

D0080797

CS 68-FP
EW 30

T-PROFIEL VERSTERKT
TRAVERSE RENFORCEE
TRANSOM-MULLION REINFORCED
SPROSSE VERSTAERKT

	A dm²/m	P dm²/m	Lm	Ix cm⁴	Wx cm³	ax mm	Iy cm⁴	Wy cm³	ay mm
005.1109.XX	48.26	24.7	7.00	83.486	14.373	57.87	24.647	5.510	44.73

005.1109.XX

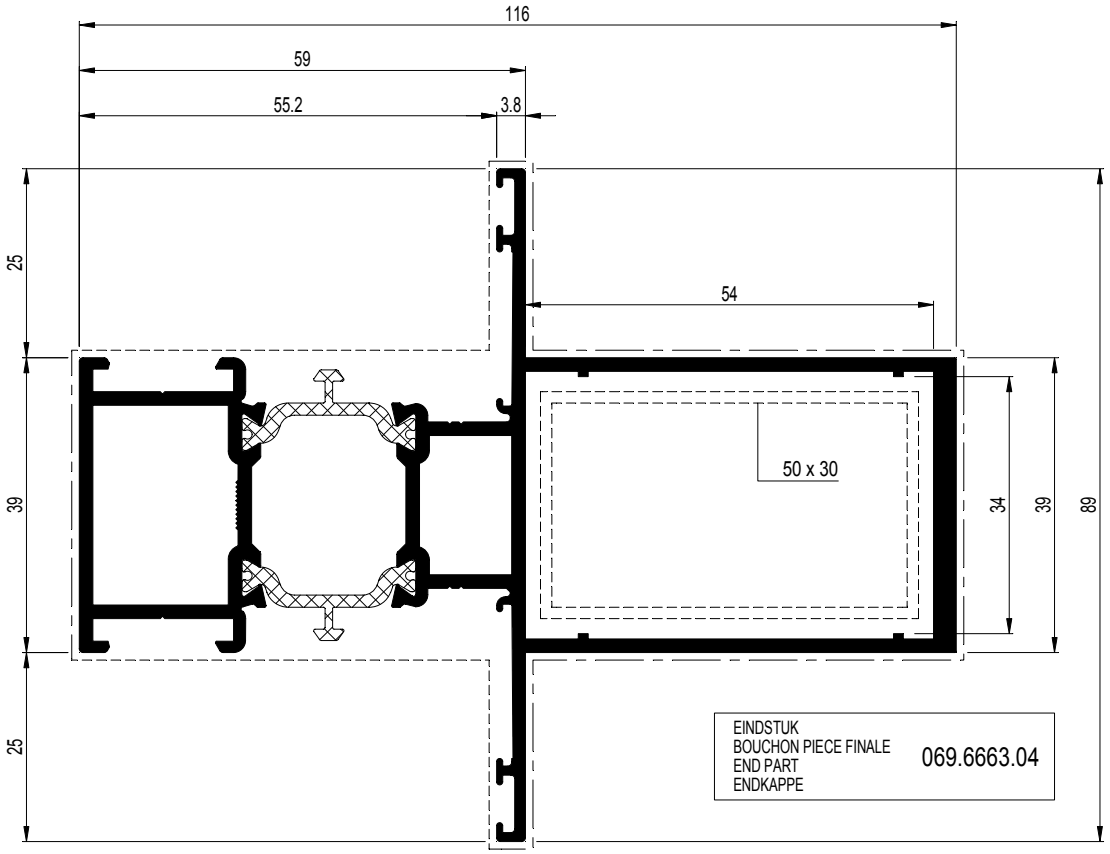

005.1109.XX + Alu 0A5.0302.XX : Ix = 93.647
005.1109.XX + Steel 50x30x3 : Ix = 121.98

005.1109.XX	
068.7952.00 068.7853.00	095.H800.00 of-ou-or-oder 095.B500.00
068.8841.00	097.0375.00
068.7952.00 068.7853.00 050.5153.-- (2x) 068.5938.-- (2x)	097.0375.00
068.7952.00 068.7853.00 068.5920.-- (2x) 068.5938.-- (2x)	097.0375.00
068.8731.00+(*) or 068.8741.00+(*) (*) 050.5153.-- (2x)	097.0374.00
068.8736.00 050.5153.-- (2x)	097.0374.00
068.8731.00+(*) or 068.8741.00+(*) (*) 068.5920.00 (2x)	097.0374.00
068.8736.00 068.5920.00 (2x)	097.0374.00
068.8779.00 068.8906.04 060.8715/16.00 (2x)	097.0009.00
068.8905.00 068.8906.04 (2x) 060.8715/16.00 (2x)	097.0008.00
069.6566.04	---
060.8723.-- (2x) or 060.8746.00 (2x) 060.8715/16.00 (2x)	---

C

D0080798

CS 68-FP
EW 30

T-PROFIEL AUTOMATISCHE SCHUIFDEUR
TRAVERSE PORTE COULISSANTE AUTOMATIQUE
TRANSOM-MULLION AUTOMATIC SLIDING DOOR
SPROSSE AUTOMATISCHE SCHIEBETUER

	A dm²/m	P dm²/m	Lm	Ix cm⁴	Wx cm³	ax mm	Iy cm⁴	Wy cm³	ay mm
005.0544.XX	39.44	16.2	7.00	13.377	3.931	24.97	28.302	5.549	51.00

X Y Y X 0

005.0544.XX

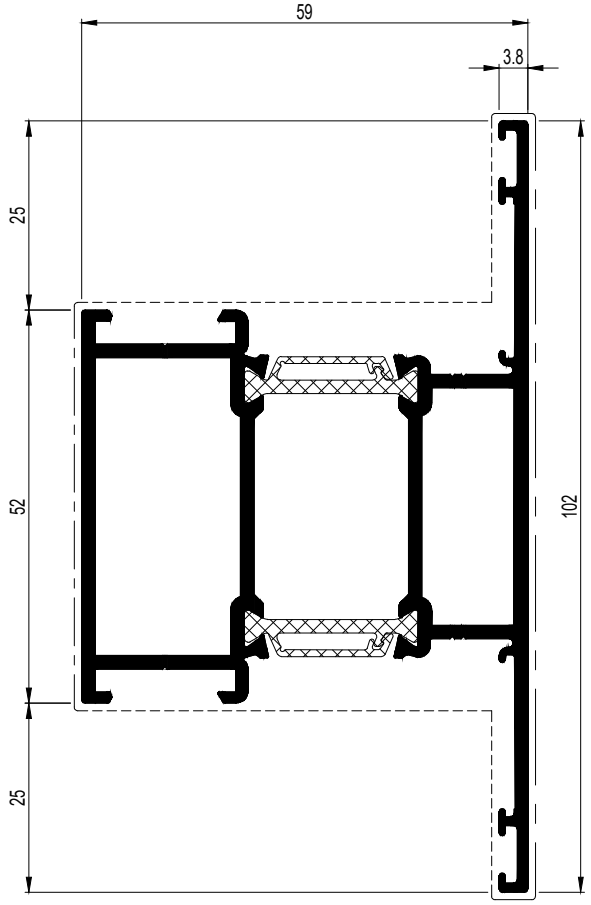

005.0544.XX		
	068.7854.00 068.7855.00	095.H800.00 of-ou-or-oder 095.B500.00
	068.8842.00	097.W900.00 097.P100.00 097.P200.00 of-ou-or-oder 097.0375.00
	068.7854.00 068.7855.00 050.5153.-- (2x) 068.5938.-- (2x)	097.W900.00 097.P100.00 097.P200.00 of-ou-or-oder 097.0375.00
	068.7854.00 068.7855.00 068.5920.-- (2x) 068.5938.-- (2x)	097.W900.00 097.P100.00 097.P200.00 of-ou-or-oder 097.0375.00
	068.8732.00+(*) or 068.8742.00+(*) (*) 050.5153.-- (2x)	097.P800.00 097.P100.00 097.P200.00 of-ou-or-oder 097.0374.00
	068.8737.00 050.5153.-- (2x)	097.P800.00 097.P100.00 097.P200.00 of-ou-or-oder 097.0374.00
	068.8732.00+(*) or 068.8742.00+(*) (*) 068.5920.00 (2x)	097.P800.00 097.P100.00 097.P200.00 of-ou-or-oder 097.0374.00
	068.8737.00 068.5920.00 (2x)	097.P800.00 097.P100.00 097.P200.00 of-ou-or-oder 097.0374.00
	068.8779.00 068.8906.04 (2x) 060.8715/16.00 (2x)	097.0009.00
	068.8905.00 068.8906.04 (4x) 060.8715/16.00 (2x)	097.0008.00
	060.8723.-- (2x) or 060.8746.00 (2x) 060.8715/16.00 (2x)	---

C

D0080778

CS 68-FP
EW 30

T-PROFIEL VERSTERKT
TRAVERSE RENFORCEE
TRANSOM-MULLION REINFORCED
SPROSSE VERSTAERKT

	A dm²/m	P dm²/m	Lm	Ix cm⁴	Wx cm³	ax mm	Iy cm⁴	Wy cm³	ay mm
005.1110.XX	54.26	30.7	7.00	151.909	19.969	76.04	28.385	6.355	44.67

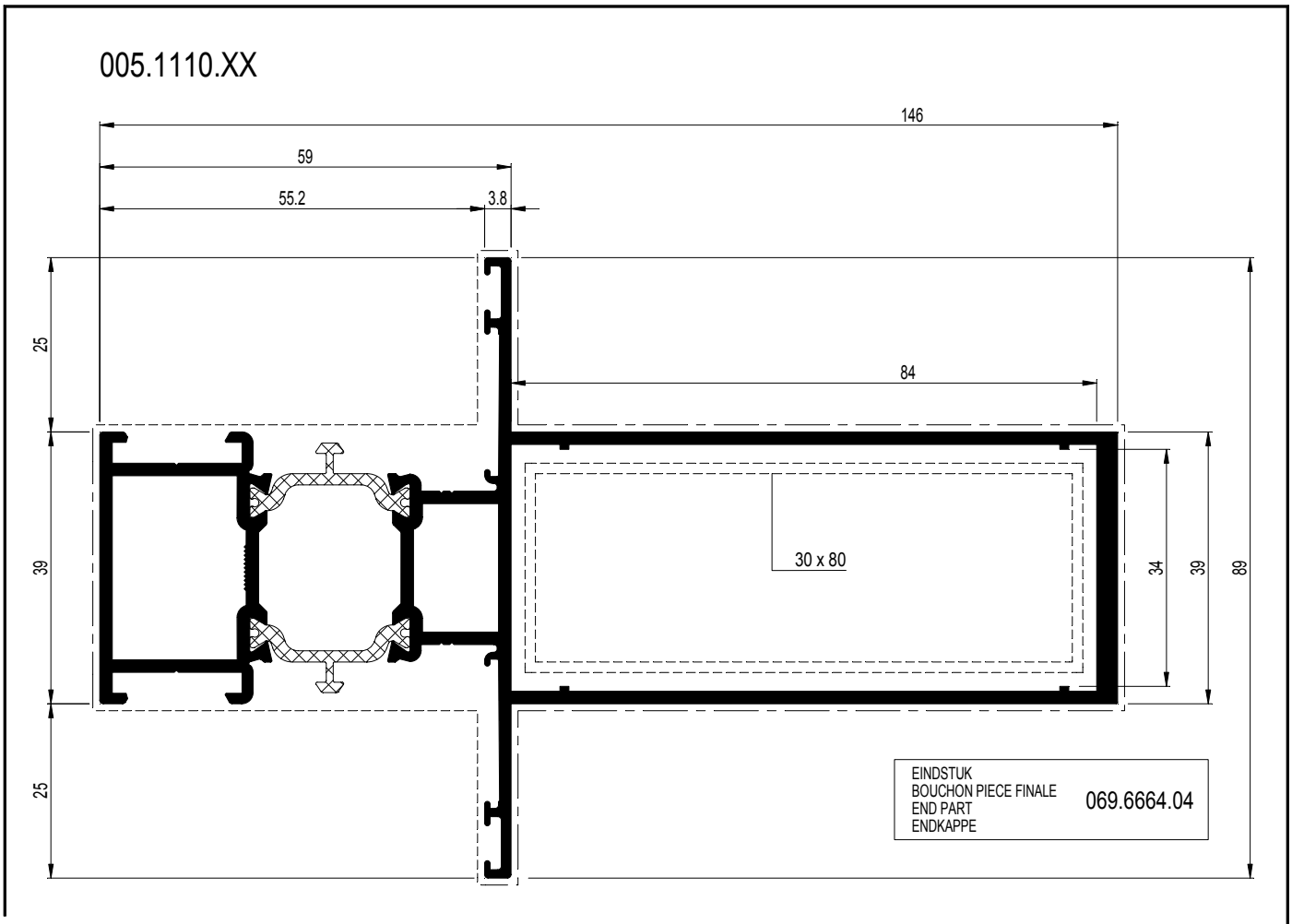

005.1110.XX	
068.7952.00 068.7853.00	095.H800.00 of-ou-or-oder 095.B500.00
068.8841.00	097.0375.00
068.7952.00 068.7853.00 050.5153.-- (2x) 068.5938.-- (2x)	097.0375.00
068.7952.00 068.7853.00 068.5920.-- (2x) 068.5938.-- (2x)	097.0375.00
068.8731.00+(*) or 068.8741.00+(*) (*) 050.5153.-- (2x)	097.0374.00
068.8736.00 050.5153.-- (2x)	097.0374.00
068.8731.00+(*) or 068.8741.00+(*) (*) 068.5920.00 (2x)	097.0374.00
068.8736.00 068.5920.00 (2x)	097.0374.00
068.8779.00 068.8906.04 060.8715/16.00 (2x)	097.0009.00
068.8905.00 068.8906.04 (2x) 060.8715/16.00 (2x)	097.0008.00
069.6566.04	---
060.8723.-- (2x) or 060.8746.00 (2x) 060.8715/16.00 (2x)	---

005.1110.XX + Alu 0A8.0303.XX : Ix = 198.86
005.1110.XX + Steel 80x30x2 : Ix = 250.64

C

D0080799

CS 68-FP
EW 30

T-PROFIEL VERBORGEN ONTWATERING
TRAVERSE DRAINAGE CACHE
TRANSOM-MULLION HIDDEN DRAINAGE
SPROSSE VERDECKTER ENTWAESSERUNG

Reynaers Aluminium

	A dm²/m	P dm²/m	Lm	Ix cm⁴	Wx cm³	ax mm	Iy cm⁴	Wy cm³	ay mm
005.0111.XX	46.91	23.6	7.00	80.424	13.066	47.45	18.348	4.123	44.50

X Y Y X 0

005.0111.XX

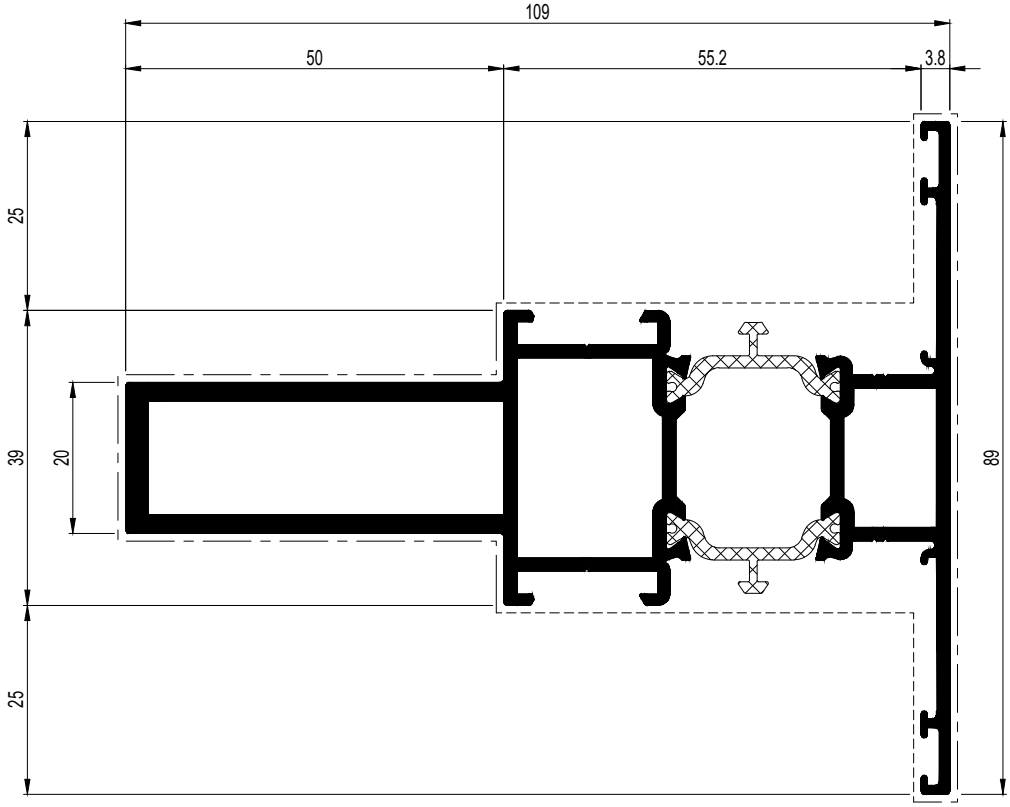

005.0111.XX	
068.7952.00 068.7853.00	095.H800.00 of-ou-or-oder 095.B500.00
068.8841.00	097.W900.00 097.P100.00 097.P200.00 of-ou-or-oder 097.0375.00
068.7952.00 068.7853.00 050.5153.-- (2x) 068.5938.-- (2x)	097.W900.00 097.P100.00 097.P200.00 of-ou-or-oder 097.0375.00
068.7952.00 068.7853.00 068.5920.-- (2x) 068.5938.-- (2x)	097.W900.00 097.P100.00 097.P200.00 of-ou-or-oder 097.0375.00
068.8731.00+(*) or 068.8741.00+(*) (*) 050.5153.-- (2x)	097.P800.00 097.F900.00 097.P200.00 of-ou-or-oder 097.0374.00
068.8736.00 050.5153.-- (2x)	097.P800.00 097.F900.00 097.P200.00 of-ou-or-oder 097.0374.00
068.8731.00+(*) or 068.8741.00+(*) (*) 068.5920.00 (2x)	097.P800.00 097.F900.00 097.P200.00 of-ou-or-oder 097.0374.00
068.8736.00 068.5920.00 (2x)	097.P800.00 097.F900.00 097.P200.00 of-ou-or-oder 097.0374.00
068.8779.00 068.8906.04 060.8715/16.00 (2x)	097.0009.00
068.8905.00 068.8906.04 (2x) 060.8715/16.00 (2x)	097.0008.00
069.6566.04	---
060.8723.-- (2x) or 060.8746.00 (2x) 060.8715/16.00 (2x)	---

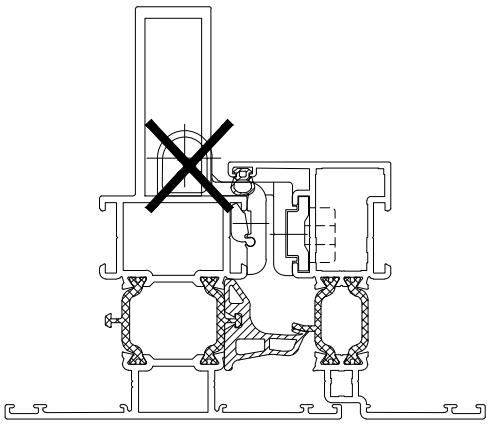

D0080800

CS 68-FP
EW 30

T-PROFIEL VERSTERKT
TRAVERSE RENFORCEE
TRANSOM-MULLION REINFORCED
SPROSSE VERSTAERKT

	A dm²/m	P dm²/m	Lm	Ix cm⁴	Wx cm³	ax mm	Iy cm⁴	Wy cm³	ay mm	
005.0420.XX	42.58	19.9	7.00	45.079	9.318	48.38	20.548	4.617	44.50	X Y Y X 0

005.0420.XX

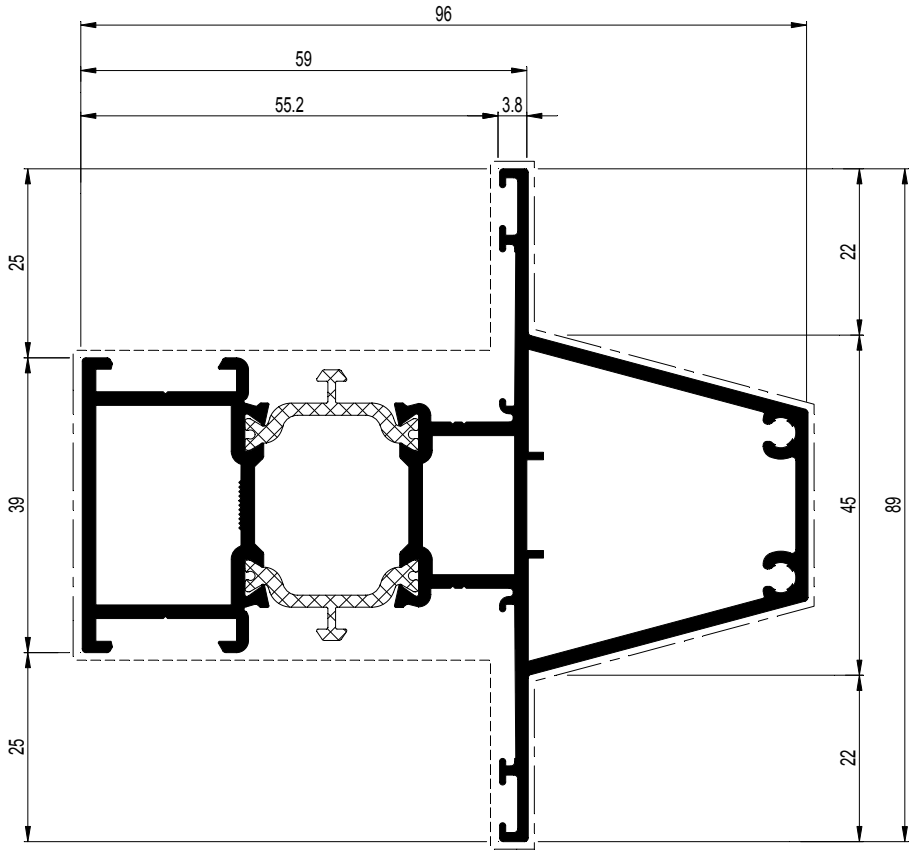

005.0420.XX	
068.7952.00 068.7853.00	095.H800.00 of-ou-or-oder 095.B500.00
068.8841.00	097.0375.00
068.7952.00 068.7853.00 050.5153.-- (2x) 068.5938.-- (2x)	097.0375.00
068.7952.00 068.7853.00 068.5920.-- (2x) 068.5938.-- (2x)	097.0375.00
068.8731.00+(*) or 068.8741.00+(*) (*) 050.5153.-- (2x)	097.0374.00
068.8736.00 050.5153.-- (2x)	097.0374.00
068.8731.00+(*) or 068.8741.00+(*) (*) 068.5920.00 (2x)	097.0374.00
068.8736.00 068.5920.00 (2x)	097.0374.00
068.8779.00 068.8906.04 060.8715/16.00 (2x)	097.0009.00
068.8905.00 068.8906.04 (2x) 060.8715/16.00 (2x)	097.0008.00
069.6571.04	---
060.8723.-- (2x) or 060.8746.00 (2x) 060.8715/16.00 (2x)	---

C

D0080801

CS 68-FP
EW 30

VERSTERKINGSPROFIEL
PROFILE DE RENFORCEMENT
REINFORCEMENT PROFILE
VERSTAERKUNGSPROFIL

	A dm²/m	P dm²/m	Lm	Ix cm⁴	Wx cm³	ax mm	Iy cm⁴	Wy cm³	ay mm
030.1096.00	-	-	7.00	4.881	2.665	18.31	5.085	2.793	18.19
030.3097.XX	11.29	11.3	7.00	2.767	1.132	12.56	5.037	2.583	19.50

Y X X 0 Y

030.1096.00

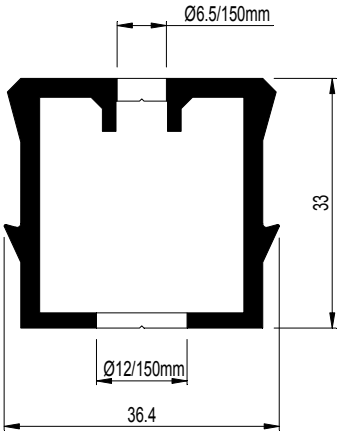

030.3097.XX

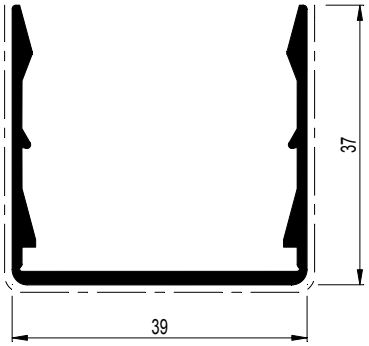

C

D0080804

CS 68-FP
EW 30

VERSTEVIGINGSPROFIEL
PROFILE DE RENFORCEMENT
REINFORCEMENT PROFILE
VERSTAERKUNGSPROFIL

	A dm²/m	P dm²/m	Lm	Ix cm⁴	Wx cm³	ax mm	Iy cm⁴	Wy cm³	ay mm
030.1097.00	-	-	7.00	10.260	3.656	28.06	4.477	2.763	16.20
030.1098.00	-	-	7.00	19.656	6.418	25.35	6.287	3.880	16.20
030.3099.XX	31.23	15.3	7.00	9.625	2.614	23.19	5.654	3.220	17.56

030.1097.00

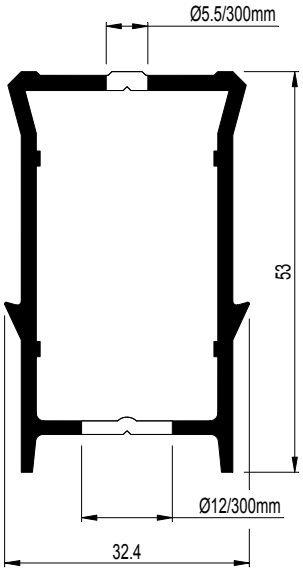

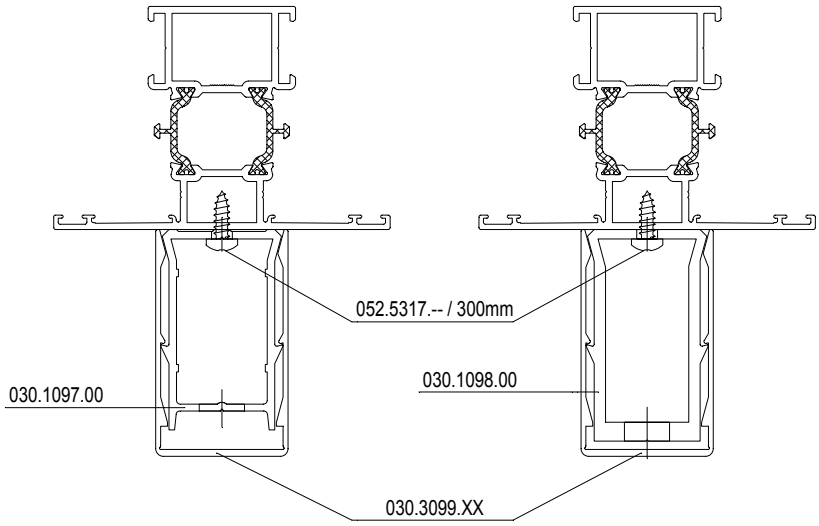

030.3099.XX

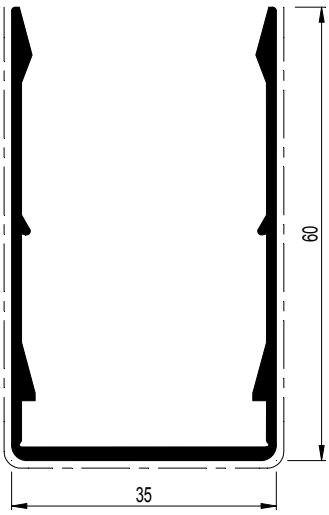

030.1098.00

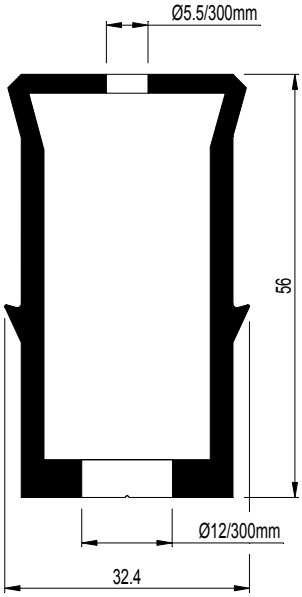

C

D0080805

CS 68-FP
EW 30

Z-PROFIEL
PROFILE-Z
Z-PROFILE
Z-PROFIL

	A dm²/m	P dm²/m	Lm	Ix cm⁴	Wx cm³	ax mm	Iy cm⁴	Wy cm³	ay mm
005.1442.XX	34.72	11.0	7.00	15.881	5.232	30.35	8.621	2.267	38.03
005.1443.XX	37.33	13.5	7.00	19.794	6.634	29.84	16.336	3.671	44.50

005.1442.XX

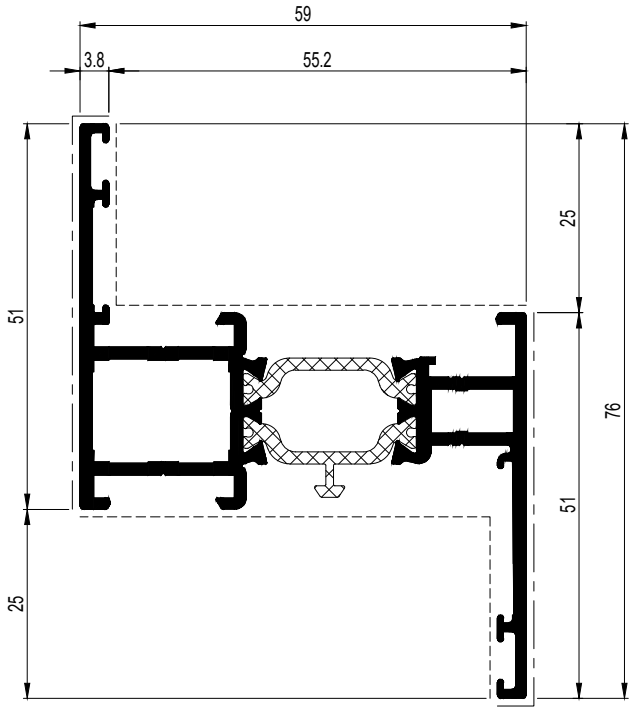

005.1443.XX

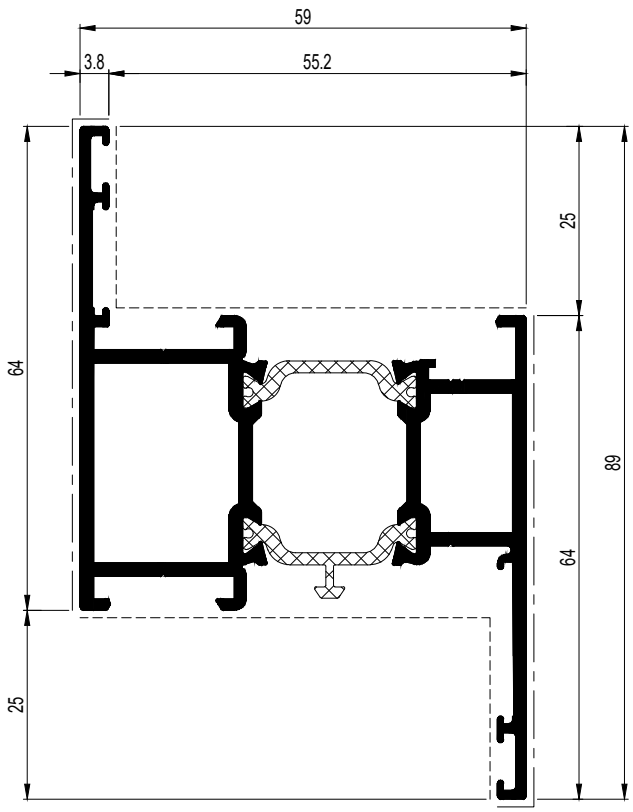

005.1442.XX	
068.7850.00 068.7851.00	095.H800.00 of-ou-or-oder 095.B500.00
068.8840.00	097.W900.00 097.O900.00 097.P000.00 of-ou-or-oder 097.0486.00
068.7850.00 068.7851.00 050.5153.-- (2x) 068.5938.-- (2x)	097.W900.00 097.O900.00 097.P000.00 of-ou-or-oder 097.0486.00
068.7850.00 068.7851.00 068.5920.-- (2x) 068.5938.-- (2x)	097.W900.00 097.O900.00 097.P000.00 of-ou-or-oder 097.0486.00
068.8730.00+(*) or 068.8740.00+(*) (*) 050.5153.--	097.P800.00 097.O900.00 097.P000.00 of-ou-or-oder 097.F800.00 of-ou-or-oder 097.0487.00
068.8735.00 050.5153.--	097.P800.00 097.O900.00 097.P000.00 of-ou-or-oder 097.F800.00 of-ou-or-oder 097.0487.00
068.8730.00+(*) or 068.8740.00+(*) (*) 068.5920.00	097.P800.00 097.O900.00 097.P000.00 of-ou-or-oder 097.F800.00 of-ou-or-oder 097.0487.00
068.8735.00 068.5920.00	097.P800.00 097.O900.00 097.P000.00 of-ou-or-oder 097.F800.00 of-ou-or-oder 097.0487.00
068.8779.00 060.8715/16.00	097.0009.00
068.8905.00 060.8715/16.00	097.0008.00
069.6565.04	---
060.8723 or 8746.00 060.8724.00 060.8715/16.00	---

005.1443.XX	
068.7952.00 068.7853.00	095.H800.00 of-ou-or-oder 095.B500.00
068.8841.00	097.W900.00 097.P100.00 097.P200.00 of-ou-or-oder 097.0486.00
068.7952.00 068.7853.00 050.5153.-- (2x) 068.5938.-- (2x)	097.W900.00 097.P100.00 097.P200.00 of-ou-or-oder 097.0486.00
068.7952.00 068.7853.00 068.5920.-- (2x) 068.5938.-- (2x)	097.W900.00 097.P100.00 097.P200.00 of-ou-or-oder 097.0486.00
068.8731.00+(*) or 068.8741.00+(*) (*) 050.5153.-- (2x)	097.P800.00 097.P100.00 097.P200.00 of-ou-or-oder 097.0487.00
068.8736.00 050.5153.-- (2x)	097.P800.00 097.P100.00 097.P200.00 of-ou-or-oder 097.0487.00
068.8731.00+(*) or 068.8741.00+(*) (*) 068.5920.00 (2x)	097.P800.00 097.P100.00 097.P200.00 of-ou-or-oder 097.0487.00
068.8736.00 068.5920.00 (2x)	097.P800.00 097.P100.00 097.P200.00 of-ou-or-oder 097.0487.00
068.8779.00 068.8906.04 060.8715/16.00	097.0009.00
068.8905.00 068.8906.04 (2x) 060.8715/16.00	097.0008.00
069.6566.04	---
060.8723 or 8746.00 060.8724.00 060.8715/16.00	---

D0080807

CS 68-FP
EW 30

Z-PROFIEL
PROFILE-Z
Z-PROFILE
Z-PROFIL

	A dm²/m	P dm²/m	Lm	Ix cm⁴	Wx cm³	ax mm	Iy cm⁴	Wy cm³	ay mm
005.1451.XX	39.93	16.1	7.00	23.143	7.840	29.52	28.362	5.559	50.98

005.1451.XX

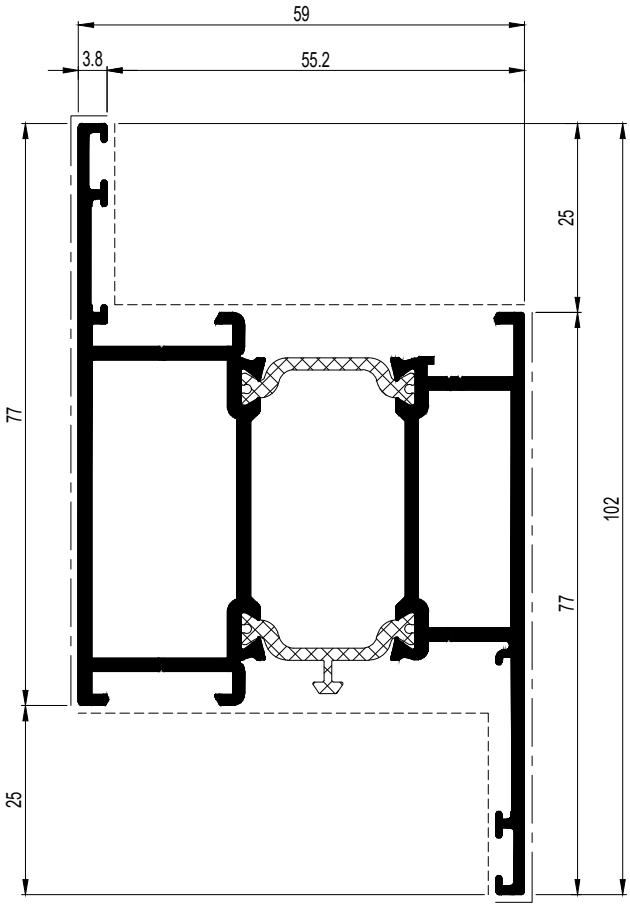

005.1451.XX	
068.7854.00 068.7855.00	095.H800.00 of-ou-or-oder 095.B500.00
068.8842.00	097.W900.00 097.P100.00 097.P200.00 of-ou-or-oder 097.0487.00
068.7854.00 068.7855.00 050.5153.-- (2x) 068.5938.-- (2x)	097.W900.00 097.P100.00 097.P200.00 of-ou-or-oder 097.0487.00
068.7854.00 068.7855.00 068.5920.-- (2x) 068.5938.-- (2x)	097.W900.00 097.P100.00 097.P200.00 of-ou-or-oder 097.0487.00
068.8732.00+(*) or 068.8742.00+(*) (*) 050.5153.-- (2x)	097.P800.00 097.P100.00 097.P200.00 of-ou-or-oder 097.0487.00
068.8737.00 050.5153.-- (2x)	097.P800.00 097.P100.00 097.P200.00 of-ou-or-oder 097.0487.00
068.8732.00+(*) or 068.8742.00+(*) (*) 068.5920.00 (2x)	097.P800.00 097.P100.00 097.P200.00 of-ou-or-oder 097.0487.00
068.8737.00 068.5920.00 (2x)	097.P800.00 097.P100.00 097.P200.00 of-ou-or-oder 097.0487.00
068.8779.00 068.8906.04 (2x) 060.8715/16.00	097.0009.00
068.8905.00 068.8906.04 (4x) 060.8715/16.00	097.0008.00
069.6567.04	---
060.8723 or 8746.00 060.8724.00 060.8715/16.00	---

C

D0080809

CS 68-FP
EW 30

Z-PROFIEL
PROFILE-Z
Z-PROFILE
Z-PROFIL

	A dm²/m	P dm²/m	Lm	Ix cm⁴	Wx cm³	ax mm	Iy cm⁴	Wy cm³	ay mm
005.1444.XX	42.53	18.7	7.00	26.489	8.914	29.28	45.519	7.913	57.47

X Y Y X 0

005.1444.XX

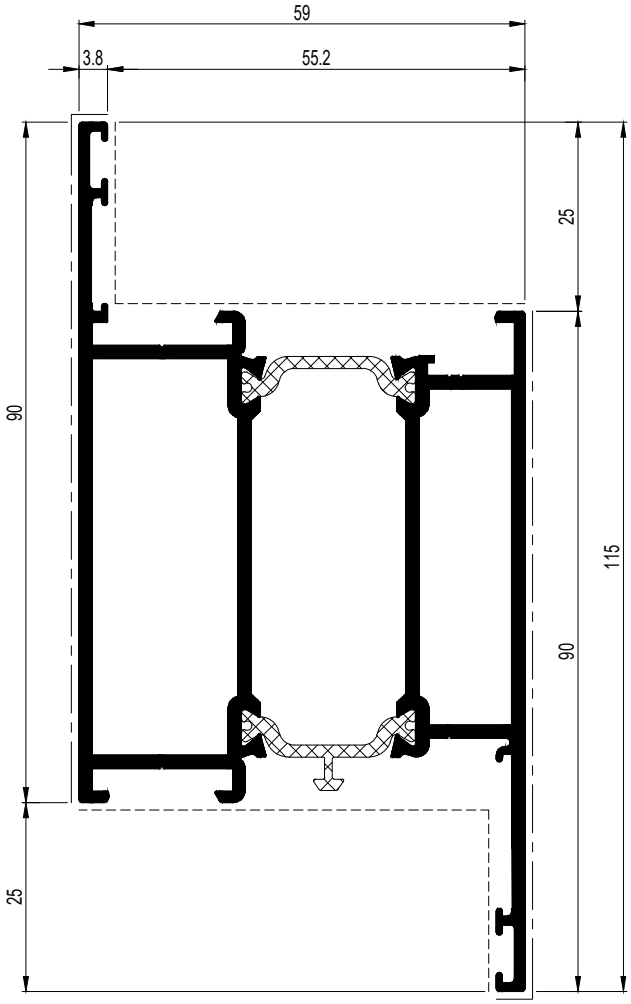

005.1444.XX	
068.7856.00 068.7857.00	095.H800.00 of-ou-or-oder 095.B500.00
068.8843.00	097.W900.00 097.P100.00 097.P200.00 of-ou-or-oder 097.0486.00
068.7856.00 068.7857.00 050.5153.-- (2x) 068.5938.-- (2x)	097.W900.00 097.P100.00 097.P200.00 of-ou-or-oder 097.0486.00
068.7856.00 068.7857.00 068.5920.-- (2x) 068.5938.-- (2x)	097.W900.00 097.P100.00 097.P200.00 of-ou-or-oder 097.0486.00
068.8733.00+(*) or 068.8743.00+(*) (*) 050.5153.-- (2x)	097.P800.00 097.P100.00 097.P200.00 of-ou-or-oder 097.0487.00
068.8738.00 050.5153.-- (2x)	097.P800.00 097.P100.00 097.P200.00 of-ou-or-oder 097.0487.00
068.8733.00+(*) or 068.8743.00+(*) (*) 068.5920.00 (2x)	097.P800.00 097.P100.00 097.P200.00 of-ou-or-oder 097.0487.00
068.8738.00 068.5920.00 (2x)	097.P800.00 097.P100.00 097.P200.00 of-ou-or-oder 097.0487.00
068.8779.00 068.8906.04 (3x) 060.8715/16.00	097.0009.00
068.8905.00 068.8906.04 (6x) 060.8715/16.00	097.0008.00
069.6568.04	---
060.8723 or 8746.00 060.8724.00 060.8715/16.00	---

C

D0080810

CS 68-FP
EW 30

Z-PROFIEL
PROFILE-Z
Z-PROFILE
Z-PROFIL

	A dm²/m	P dm²/m	Lm	Ix cm⁴	Wx cm³	ax mm	Iy cm⁴	Wy cm³	ay mm
005.0144.XX	42.24	19.5	7.00	28.600	9.535	29.01	46.691	7.955	56.31

X Y Y X 0

005.0144.XX

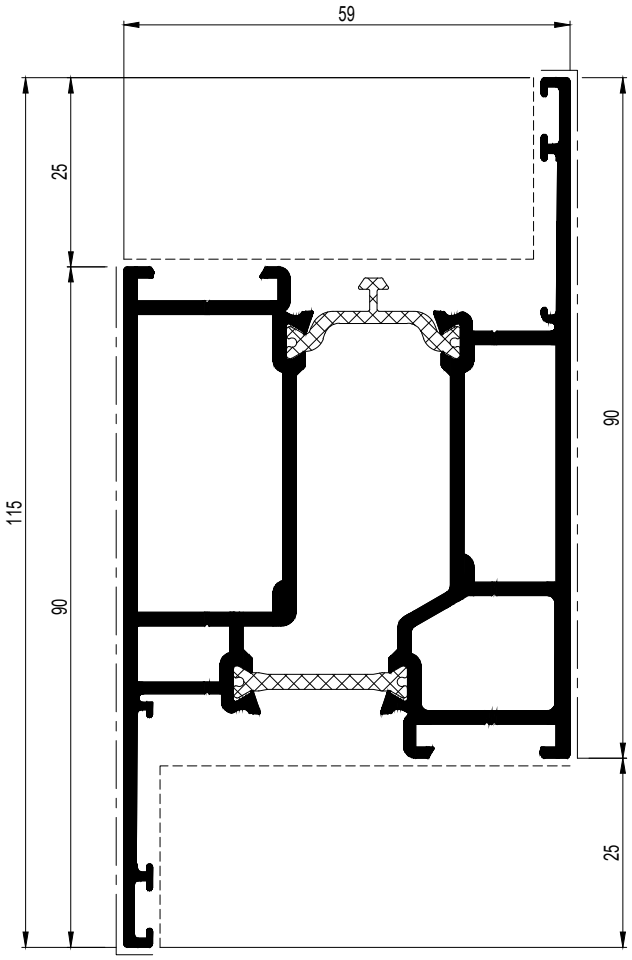

005.0144.XX	
068.7854.00 068.7855.00	095.H800.00 of-ou-or-oder 095.B500.00
068.8842.00	097.W900.00 097.P100.00 097.P200.00 of-ou-or-oder 097.0375.00
068.7854.00 068.7855.00 050.5153.-- (2x) 068.5938.-- (2x)	097.W900.00 097.P100.00 097.P200.00 of-ou-or-oder 097.0375.00
068.7854.00 068.7855.00 068.5920.-- (2x) 068.5938.-- (2x)	097.W900.00 097.P100.00 097.P200.00 of-ou-or-oder 097.0375.00
068.8732.00+(*) or 068.8742.00+(*) (*) 050.5153.-- (2x)	097.P800.00 097.P100.00 097.P200.00 of-ou-or-oder 097.0374.00
068.8732.00+(*) or 068.8742.00+(*) (*) 068.5920.00 (2x)	097.P800.00 097.P100.00 097.P200.00 of-ou-or-oder 097.0374.00
060.8723.-- (2x) or 060.8746.00 (2x)	---

C

D0080811

CS 68-FP
EW 30

GLASLAT RAAM EN DEUR
PARCLOSE FENETRE ET PORTE
GLAZING BEAD WINDOW AND DOOR
GLASLEISTE FENSTER UND TUER

	A dm²/m	P dm²/m	Lm	Ix cm⁴	Wx cm³	ax mm	Iy cm⁴	Wy cm³	ay mm
030.3606.XX	12.37	3.4	7.00	0.277	0.198	13.99	0.919	0.612	14.14
030.3607.XX	15.11	3.7	7.00	0.333	0.255	13.08	0.895	0.581	15.39
030.3608.XX	15.10	4.0	7.00	0.431	0.354	12.15	0.914	0.560	16.34
030.3609.XX	15.56	4.3	7.00	0.544	0.483	11.26	0.967	0.572	16.89
030.3610.XX	16.19	4.6	7.00	0.691	0.646	10.70	1.022	0.590	17.32
030.3611.XX	16.93	4.9	7.00	0.875	0.690	12.67	1.076	0.609	17.69
030.3612.XX	18.97	5.2	7.00	0.995	0.670	14.85	1.148	0.620	18.53
030.3613.XX	19.57	5.5	7.00	1.192	0.696	17.13	1.184	0.629	18.81
030.3614.XX	20.17	5.8	7.00	1.431	0.739	19.37	1.217	0.638	19.07
030.3615.XX	20.86	6.1	7.00	1.750	0.821	21.31	1.252	0.647	19.35
030.3644.XX	10.24	2.8	7.00	0.291	0.213	13.64	0.560	0.299	9.46

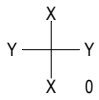

030.3644.XX

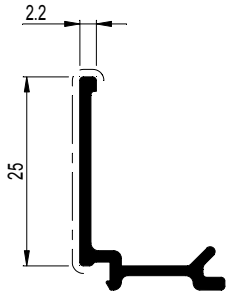

030.3607.XX

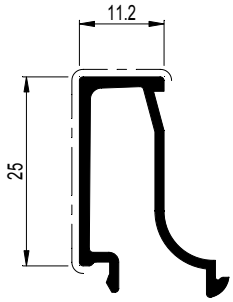

030.3610.XX

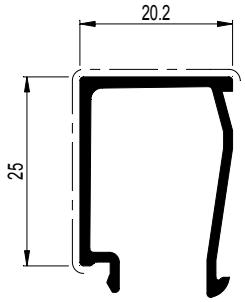

030.3613.XX

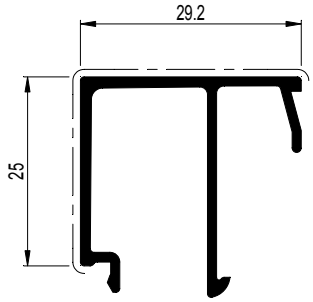

030.3608.XX

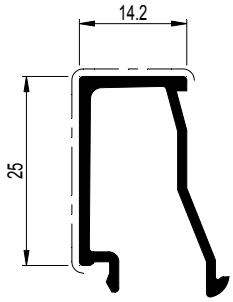

030.3611.XX

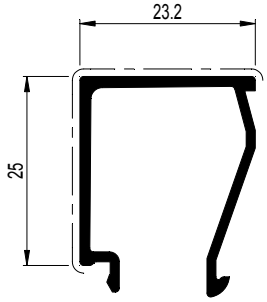

030.3614.XX

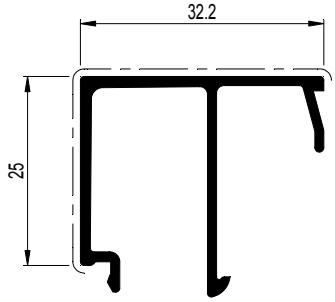

030.3606.XX

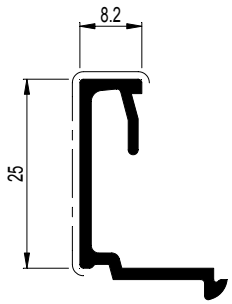

030.3609.XX

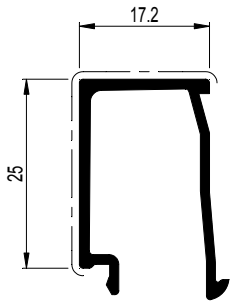

030.3612.XX

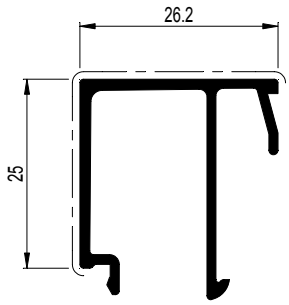

030.3615.XX

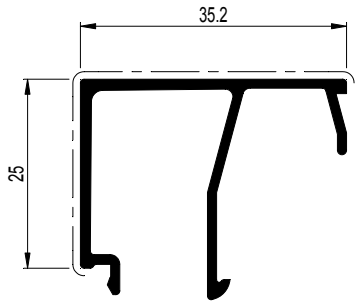

Beglazingstabel zie pagina 12.F....
Tableau de vitrage voir page 12.F....
Glazing table see page 12.F....
Verglasungstabelle Siehe Seite 12.F....

D0080817

C

CS 68-FP
EW 30

GLASLAT VLEUGEL
PARCLOSE OUVRANT
GLAZING BEAD VENT
GLASLEISTE FLUEGEL

	A dm²/m	P dm²/m	Lm	Ix cm⁴	Wx cm³	ax mm	Iy cm⁴	Wy cm³	ay mm
030.3628.XX	18.71	4.9	7.00	1.230	0.748	16.44	1.186	0.705	11.96
030.3629.XX	19.16	5.2	7.00	1.394	0.872	15.98	1.292	0.761	16.96
030.3630.XX	19.79	5.5	7.00	1.648	1.067	15.45	1.347	0.778	17.31
030.3631.XX	20.53	5.8	7.00	1.952	1.120	17.43	1.401	0.796	17.61
030.3632.XX	22.57	6.1	7.00	2.192	1.134	19.33	1.478	0.806	18.34
030.3633.XX	23.41	6.4	7.00	2.503	1.164	16.70	1.533	0.815	10.56
030.3634.XX	24.03	6.7	7.00	2.849	1.201	23.73	1.579	0.823	19.18
030.3635.XX	24.72	7.0	7.00	3.311	1.287	25.72	1.614	0.832	19.41

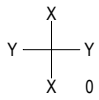

030.3628.XX

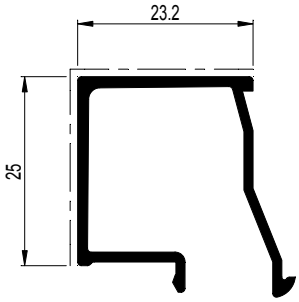

030.3631.XX

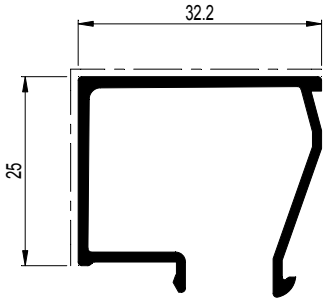

030.3634.XX

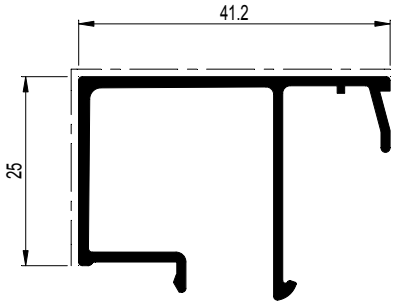

030.3629.XX

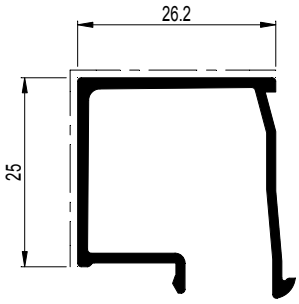

030.3632.XX

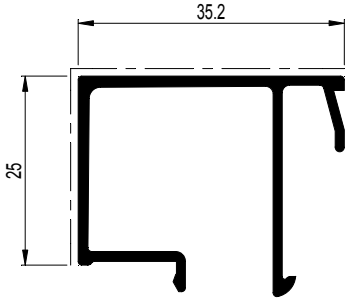

030.3635.XX

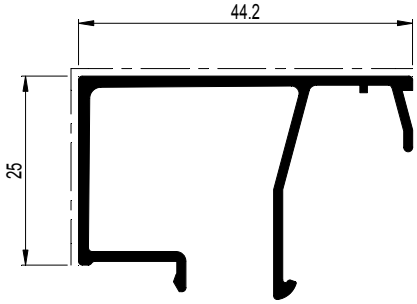

030.3630.XX

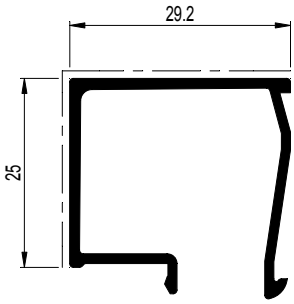

030.3633.XX

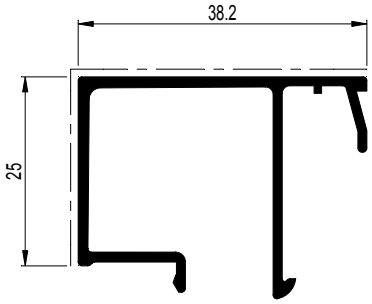

	Beglazingstabel zie pagina 12.F.... Tableau de vitrage voir page 12.F.... Glazing table see page 12.F.... Verglasungstabelle Siehe Seite 12.F....

C

D0080819

CS 68-FP
EW 30

GLASLAT RAAM EN DEUR
PARCLOSE FENETRE ET PORTE
GLAZING BEAD WINDOW AND DOOR
GLASLEISTE FENSTER UND TUER

	A dm²/m	P dm²/m	Lm	Ix cm⁴	Wx cm³	ax mm	Iy cm⁴	Wy cm³	ay mm
030.3616.XX	21.65	6.4	7.00	2.197	0.962	22.85	1.313	0.666	19.70
030.3617.XX	22.66	6.7	7.00	2.650	1.075	24.65	1.369	0.677	20.24

X Y Y X 0

030.3616.XX

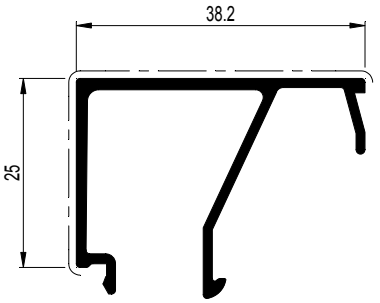

030.3617.XX

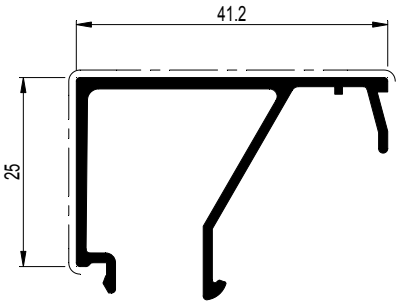

C

Beglazingstabel zie pagina 12.F....
Tableau de vitrage voir page 12.F....
Glazing table see page 12.F....
Verglasungstabelle Siehe Seite 12.F....

D0080822

CS 68-FP
EW 30

KOPPELPROFIEL ALGEMEEN
PROFILE DE RACCORDEMENT GENERAL
CONNECTION PROFILE GENERAL
KOPPLUNGSPROFIL ALLGEMEIN

	A dm²/m	P dm²/m	Lm	Ix cm⁴	Wx cm³	ax mm	Iy cm⁴	Wy cm³	ay mm
030.0138.00	-	-	7.00	-	-	-	-	-	-
030.0139.00	-	-	7.00	0.202	0.236	8.56	0.072	0.124	5.23

030.0138.00

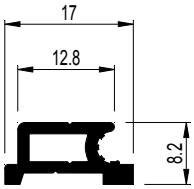

030.0139.00

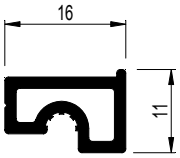

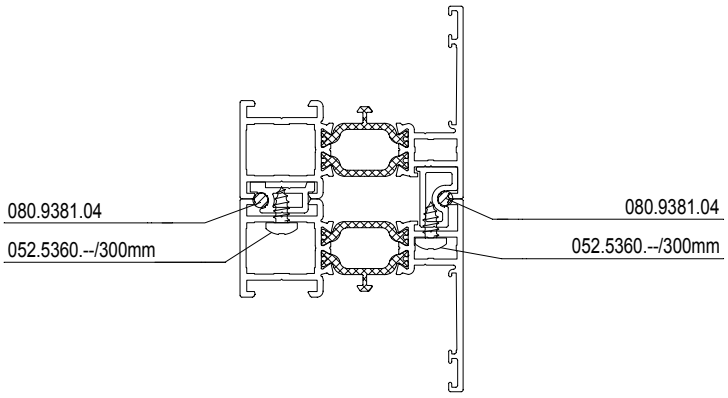

C

D0080827

CS 68-FP
EW 30

LEKLIJST
REJET D'EAU
DRIP CAP
WETTERSCHENKEL

	A dm²/m	P dm²/m	Lm	Ix cm⁴	Wx cm³	ax mm	Iy cm⁴	Wy cm³	ay mm
004.3846.XX	7.39	5.9	6.00	0.074	0.077	4.48	0.257	0.224	7.52
026.0119.XX	12.77	3.8	6.00	0.314	0.274	10.28	0.870	0.424	9.50
030.0019.XX	8.62	2.7	7.00	0.138	0.151	6.58	0.186	0.192	8.33
030.3119.XX	7.27	2.3	6.00	0.071	0.096	7.38	0.187	0.175	8.84

004.3846.XX

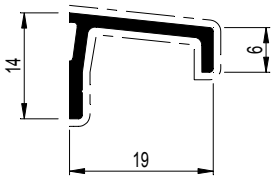

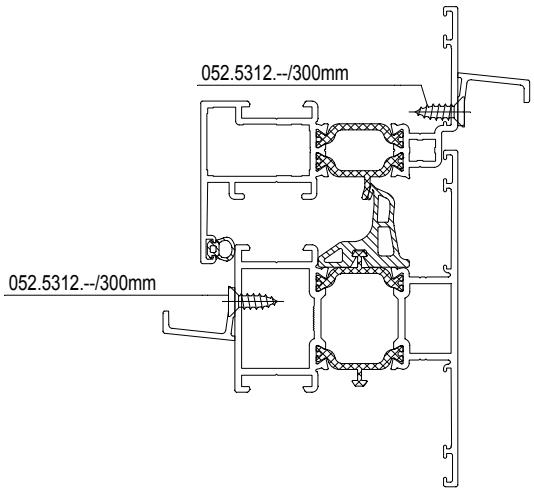

026.0119.XX

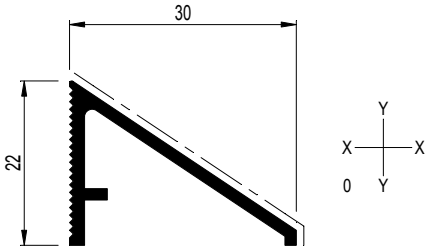

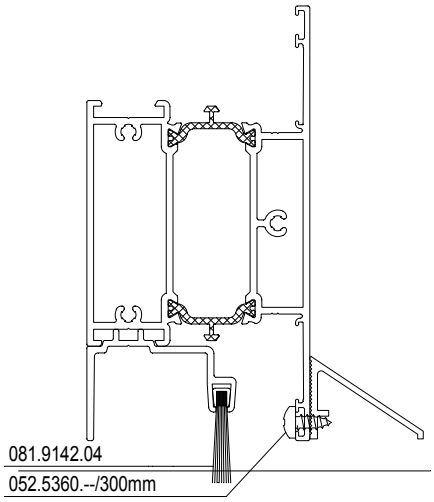

030.0019.XX

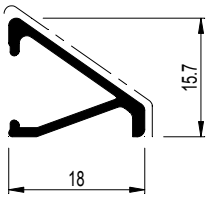

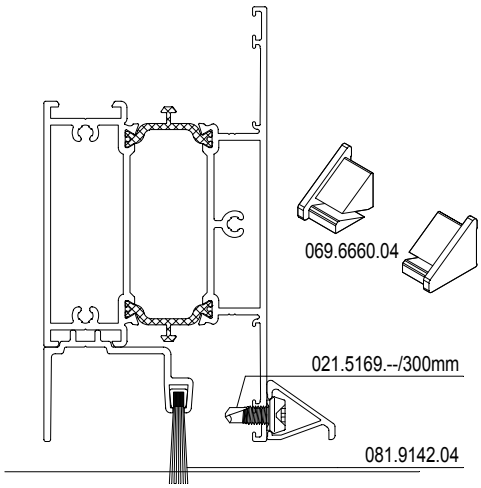

030.3119.XX

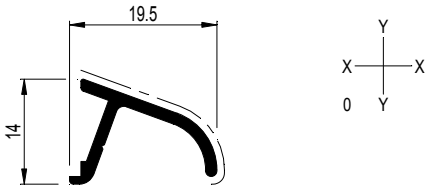

D0080933

CS 68-FP
EW 30

LEKLIJST
REJET D'EAU
DRIP CAP
WETTERSCHENKEL

	A dm²/m	P dm²/m	Lm	Ix cm⁴	Wx cm³	ax mm	Iy cm⁴	Wy cm³	ay mm
048.0919.XX	11.00	6.5	7.00	0.131	0.170	4.30	0.799	0.344	23.23

048.0919.XX

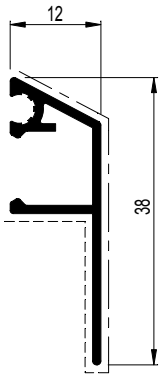

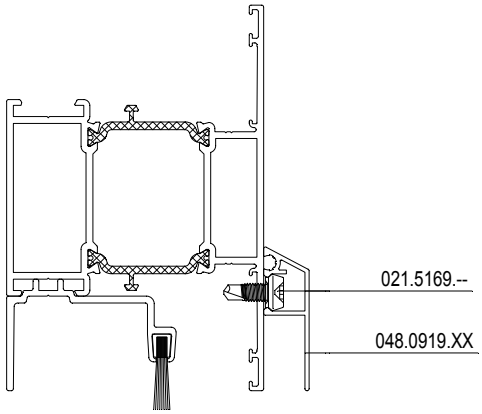

C

D0080940

CS 68-FP
EW 30

BUITENKADER
DORMANT
OUTER FRAME
BLENDRAHMEN

	A dm²/m	P dm²/m	Lm	Ix cm⁴	Wx cm³	ax mm	Iy cm⁴	Wy cm³	ay mm
005.1249.XX	29.97	8.7	7.00	19.404	4.885	28.28	7.359	2.294	18.92
005.1250.XX	32.57	11.3	7.00	24.754	6.449	29.62	15.175	3.930	25.39

X Y Y X 0

005.1249.XX

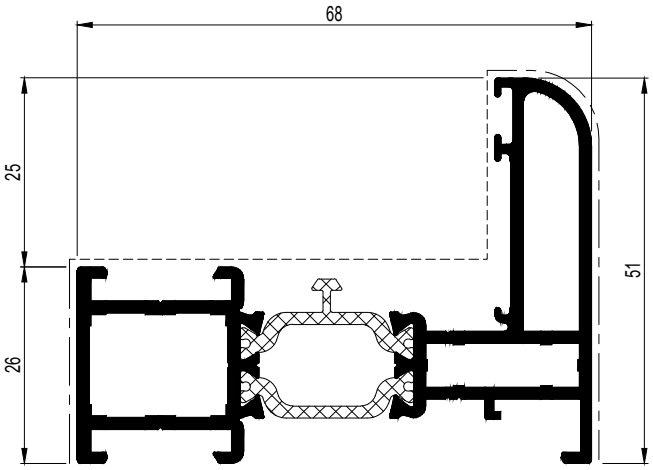

005.1250.XX

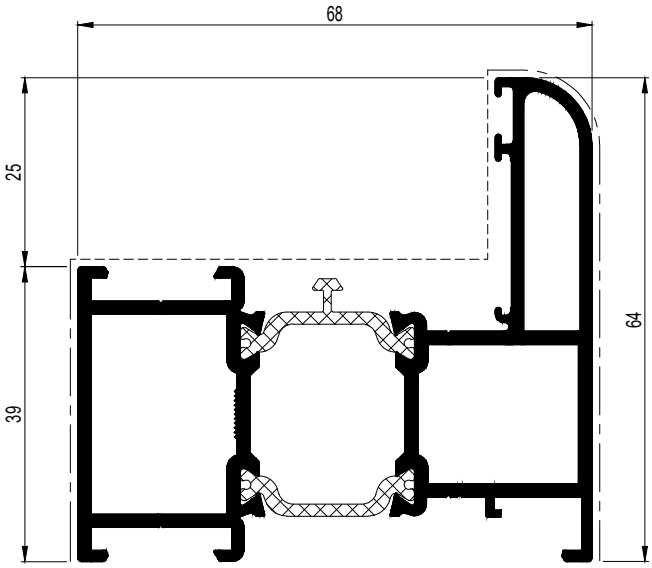

C

005.1249.XX	
068.7738.00	095.H800.00 of-ou-or-oder 095.B500.00
068.8838.00	097.W900.00 097.O900.00 097.P000.00 of-ou-or-oder 097.F800.00 of-ou-or-oder 097.0375.00
068.8730.00+(*) or 068.8740.00+(*) (*) 050.5153.--	097.P800.00 097.O900.00 097.P000.00 of-ou-or-oder 097.F800.00 of-ou-or-oder 097.0374.00
068.8735.00 050.5153.--	097.P800.00 097.O900.00 097.P000.00 of-ou-or-oder 097.F800.00 of-ou-or-oder 097.0374.00
068.8730.00+(*) or 068.8740.00+(*) (*) 068.5920.00	097.P800.00 097.O900.00 097.P000.00 of-ou-or-oder 097.F800.00 of-ou-or-oder 097.0374.00
068.8735.00 068.5920.00	097.P800.00 097.O900.00 097.P000.00 of-ou-or-oder 097.F800.00 of-ou-or-oder 097.0374.00
068.8779.00 060.8715/16.00	097.0009.00
068.8905.00 060.8715/16.00	097.0008.00
069.6565.04	---
060.8723.-- or 060.8746.00 060.8715/16.00	---

005.1250.XX	
068.7739.00	095.H800.00 of-ou-or-oder 095.B500.00
068.8839.00	097.W900.00 097.P100.00 097.P200.00 of-ou-or-oder 097.0375.00
068.8731.00+(*) or 068.8741.00+(*) (*) 050.5153.-- (2x)	097.P800.00 097.P100.00 097.P200.00 of-ou-or-oder 097.0374.00
068.8736.00 050.5153.-- (2x)	097.P800.00 097.P100.00 097.P200.00 of-ou-or-oder 097.0374.00
068.8731.00+(*) or 068.8741.00+(*) (*) 068.5920.00 (2x)	097.P800.00 097.P100.00 097.P200.00 of-ou-or-oder 097.0374.00
068.8736.00 068.5920.00 (2x)	097.P800.00 097.P100.00 097.P200.00 of-ou-or-oder 097.0374.00
068.8779.00 068.8906.04 060.8715/16.00	097.0009.00
068.8905.00 068.8906.04 (2x) 060.8715/16.00	097.0008.00
069.6566.04	---
060.8723.-- or 060.8746.00 060.8715/16.00	---

D0080969

CS 68-FP
EW 30

VLEUGEL
OUVRANT
VENT
FLUEGEL

	A dm²/m	P dm²/m	Lm	Ix cm⁴	Wx cm³	ax mm	Iy cm⁴	Wy cm³	ay mm
005.0203.XX	45.54	14.0	7.00	33.465	8.645	38.29	18.567	4.534	40.95
005.0251.XX	22.59	11.0	7.00	25.031	6.233	40.16	9.413	2.747	34.27

005.0203.XX

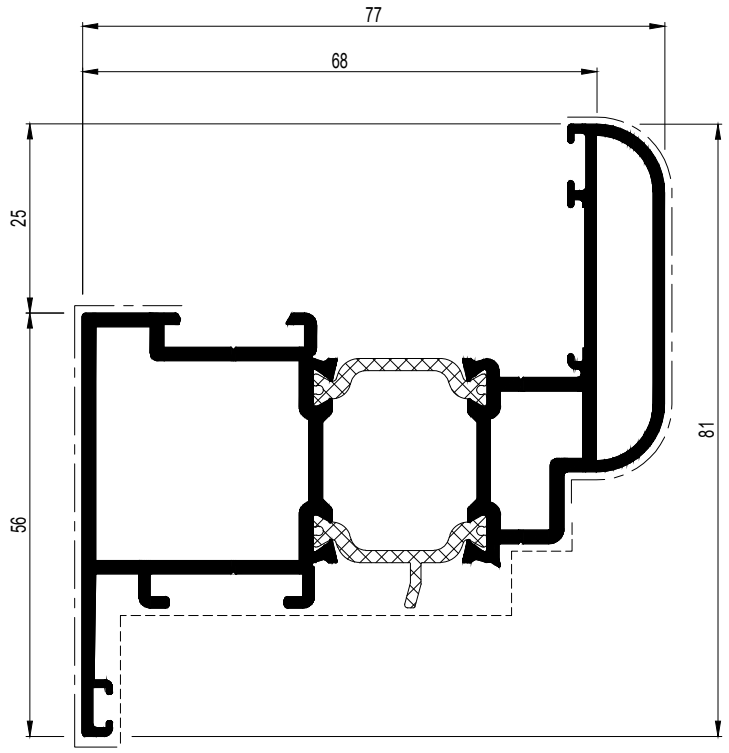

005.0251.XX	
068.7958.00 068.7859.00	095.H800.00 of-ou-or-oder 095.B500.00
068.8844.00	097.W900.00 097.O900.00 097.P000.00 of-ou-or-oder 097.F800.00 of-ou-or-oder 097.0375.00
068.7958.00 068.7859.00 050.5153.-- (2x) 068.5938.-- (2x)	097.W900.00 097.O900.00 097.P000.00 of-ou-or-oder 097.F800.00 of-ou-or-oder 097.0375.00
068.7958.00 068.7859.00 068.5920.-- (2x) 068.5938.-- (2x)	097.W900.00 097.O900.00 097.P000.00 of-ou-or-oder 097.F800.00 of-ou-or-oder 097.0375.00
068.8876.00 060.8715/16.00	097.0008.00
069.6565.04	---
060.8723.-- or 060.8746.00 060.8715/16.00 (*)	---

005.0251.XX

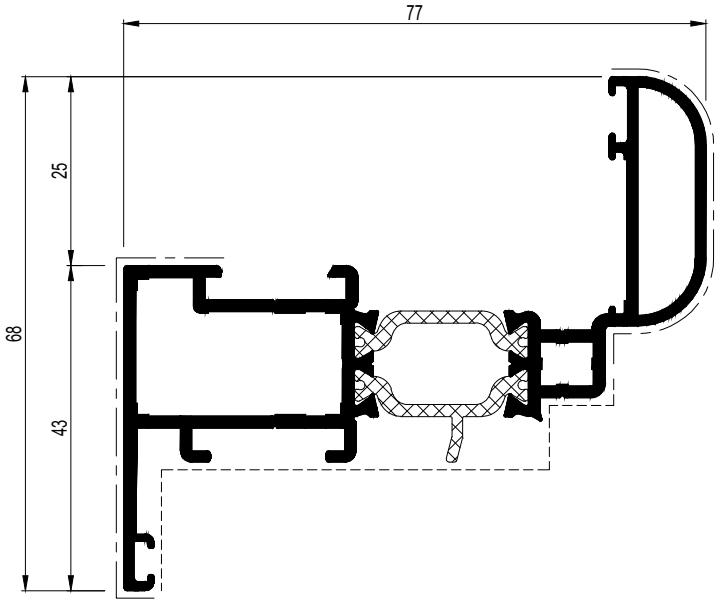

005.0203.XX	
068.7860.00 068.7861.00	095.H800.00 of-ou-or-oder 095.B500.00
068.8845.00	097.W900.00 097.P100.00 097.P200.00 of-ou-or-oder 097.0375.00
068.7860.00 068.7861.00 050.5153.-- (2x) 068.5938.-- (2x)	097.W900.00 097.P100.00 097.P200.00 of-ou-or-oder 097.0375.00
068.7860.00 068.7861.00 068.5920.-- (2x) 068.5938.-- (2x)	097.W900.00 097.P100.00 097.P200.00 of-ou-or-oder 097.0375.00
068.8905.00+(*) 068.8906.04	097.0008.00
069.6566.04	---
060.8723.-- or 060.8746.00 060.8715/16.00 (*)	---

C

D0080975

CS 68-FP
EW 30

VLEUGEL RAAMDEUR NAAR BINNENDRAAIEND
OUVRANT PORTE-FENETRE OUVRANT VERS L'INTERIEUR
VENT WINDOW-DOOR INWARD OPENING
FLUEGEL FENSTERTUER NACH INNEN OEFFNEND

	A dm²/m	P dm²/m	Lm	Ix cm⁴	Wx cm³	ax mm	Iy cm⁴	Wy cm³	ay mm
005.0252.XX	55.94	18.9	7.00	46.217	11.464	36.69	52.613	9.702	54.23

X Y Y X 0

005.0252.XX

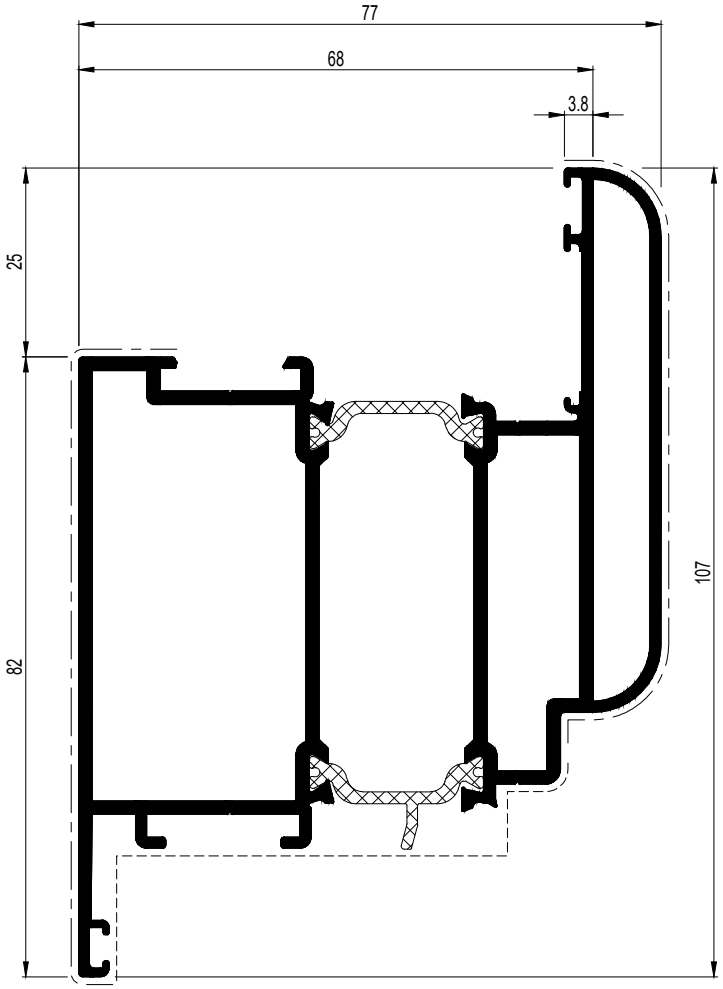

005.0252.XX	
068.7747.00	095.H800.00 of-ou-or-oder 095.B500.00
068.8847.00	097.W900.00 097.P100.00 097.P200.00 of-ou-or-oder 097.0375.00
068.8876.00 068.8906.04 (6x) 060.8715/16.00	097.0008.00
069.6568.04	---
060.8723.-- or 060.8746.00 060.8715/16.00	---

C

D0080976

CS 68-FP
EW 30

STOLPPROFIEL
BATTEE CENTRALE FENETRE DOUBLE OUVRANTE
DOUBLE CASEMENT PROFILE
STULPPROFIL

	A dm²/m	P dm²/m	Lm	Ix cm⁴	Wx cm³	ax mm	Iy cm⁴	Wy cm³	ay mm
001.0255.XX	22.05	7.9	7.00	0.204	0.409	4.03	9.209	2.676	33.56

X Y Y X 0

001.0255.XX

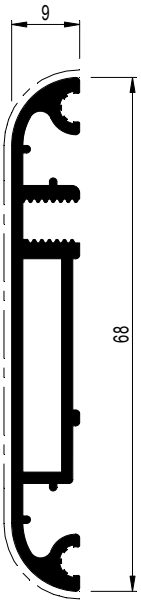

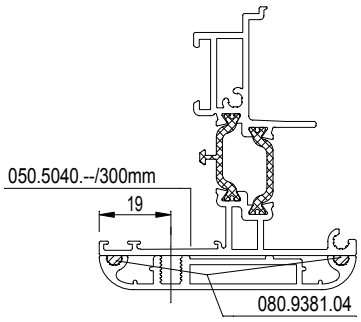

EINDSTUK BOUCHON PIECE FINALE END PART ENDKAPPE	069.6689.04 + 2 x 069.6649.XX

FREES FRAISE MILLING HEAD FRAESE	095.B102.00

C

D0080978

CS 68-FP
EW 30

T-PROFIEL
TRAVERSE
TRANSOM
RIEGEL

	A dm²/m	P dm²/m	Lm	Ix cm⁴	Wx cm³	ax mm	Iy cm⁴	Wy cm³	ay mm
005.1270.XX	35.31	12.1	7.00	22.539	5.134	24.10	16.230	4.271	38.00
005.1271.XX	37.86	14.7	7.00	28.416	6.761	25.97	28.283	6.356	44.50

X Y Y X 0

005.1270.XX

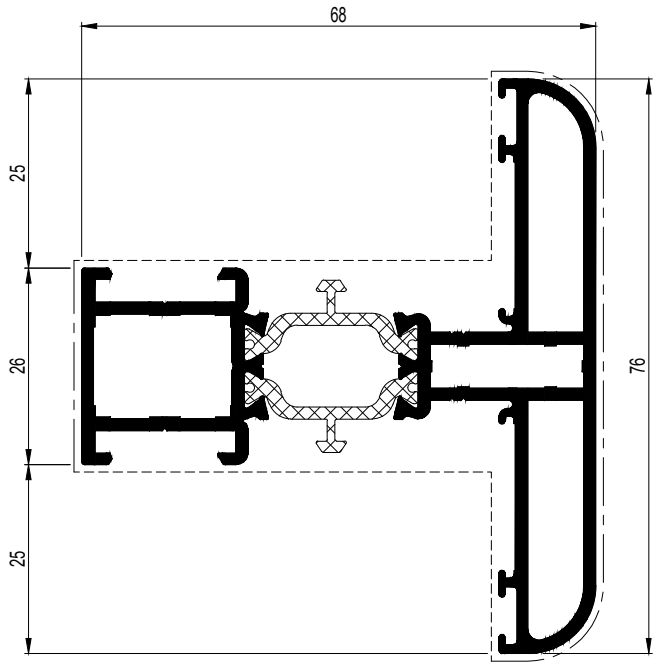

005.1271.XX

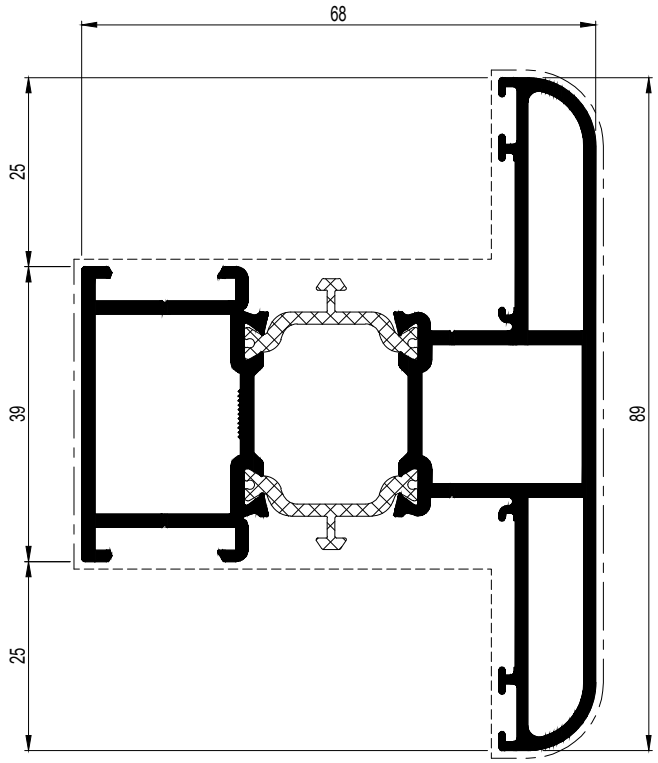

005.1270.XX	
068.7738.00	095.H800.00 of-ou-or-oder 095.B500.00
068.8838.00	097.W900.00 097.O900.00 097.P000.00 of-ou-or-oder 097.F800.00 of-ou-or-oder 097.0375.00
068.8730.00+(*) or 068.8740.00+(*) (*) 050.5153.--	097.P800.00 097.O900.00 097.P000.00 of-ou-or-oder 097.F800.00 of-ou-or-oder 097.0374.00
068.8735.00 050.5153.--	097.P800.00 097.O900.00 097.P000.00 of-ou-or-oder 097.F800.00 of-ou-or-oder 097.0374.00
068.8730.00+(*) or 068.8740.00+(*) (*) 068.5920.00	097.P800.00 097.O900.00 097.P000.00 of-ou-or-oder 097.F800.00 of-ou-or-oder 097.0374.00
068.8735.00 068.5920.00	097.P800.00 097.O900.00 097.P000.00 of-ou-or-oder 097.F800.00 of-ou-or-oder 097.0374.00
068.8779.00 060.8715/16.00 (2x)	097.0009.00
068.8905.00 060.8715/16.00 (2x)	097.0008.00
069.6565.04	---
060.8723.-- (2x) or 060.8746.00 (2x) 060.8715/16.00 (2x)	---

005.1271.XX	
068.7739.00	095.H800.00 of-ou-or-oder 095.B500.00
068.8839.00	097.W900.00 097.P100.00 097.P200.00 of-ou-or-oder 097.0375.00
068.8731.00+(*) or 068.8741.00+(*) (*) 050.5153.-- (2x)	097.P800.00 097.P100.00 097.P200.00 of-ou-or-oder 097.F800.00 of-ou-or-oder 097.0374.00
068.8736.00 050.5153.-- (2x)	097.P800.00 097.P100.00 097.P200.00 of-ou-or-oder 097.F800.00 of-ou-or-oder 097.0374.00
068.8731.00+(*) or 068.8741.00+(*) (*) 068.5920.00 (2x)	097.P800.00 097.P100.00 097.P200.00 of-ou-or-oder 097.0374.00
068.8736.00 068.5920.00 (2x)	097.P800.00 097.P100.00 097.P200.00 of-ou-or-oder 097.0374.00
068.8779.00 068.8906.04 060.8715/16.00 (2x)	097.0009.00
068.8905.00 068.8906.04 (2x) 060.8715/16.00 (2x)	097.0008.00
069.6566.04	---
060.8723.-- (2x) or 060.8746.00 (2x) 060.8715/16.00 (2x)	---

D0080980

CS 68-FP
EW 30

GLASLAT
PARCLOSE
GLAZING BEAD
GLASLEISTE

	A dm²/m	P dm²/m	Lm	Ix cm⁴	Wx cm³	ax mm	Iy cm⁴	Wy cm³	ay mm
001.0248.XX	18.26	4.5	7.00	1.173	0.741	15.83	1.084	0.662	12.42
001.0260.XX	14.66	3.6	7.00	0.843	0.544	15.48	0.378	0.319	7.94
005.0276.XX	16.30	4.3	7.00	1.002	0.585	17.12	0.817	0.673	11.05
005.0277.XX	19.90	5.2	7.00	1.328	0.774	17.16	1.844	1.097	15.39

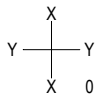

001.0260.XX

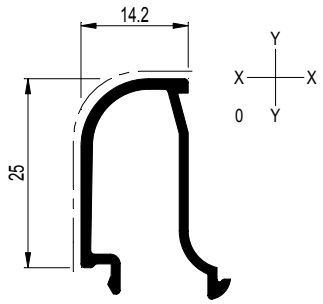

001.0248.XX

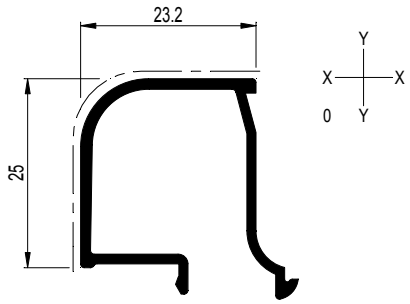

005.0276.XX

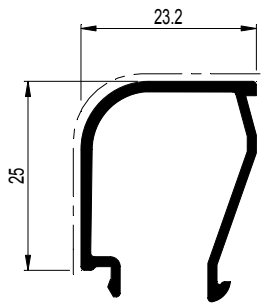

005.0277.XX

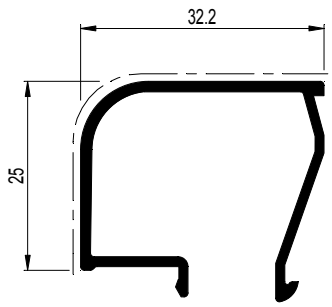

Beglazingstabel zie pagina 12.F....
Tableau de vitrage voir page 12.F....
Glazing table see page 12.F....
Verglasungstabelle Siehe Seite 12.F....

C

D0080981

CS 68-FP
EW 30

BUITENKADER
DORMANT
OUTER FRAME
BLENDRAHMEN

	A dm²/m	P dm²/m	Lm	Ix cm⁴	Wx cm³	ax mm	Iy cm⁴	Wy cm³	ay mm
005.1216.XX	32.65	11.4	7.00	24.492	6.414	29.81	14.444	3.713	25.10
005.1236.XX	30.05	8.8	7.00	19.164	4.854	28.52	6.825	2.106	18.60

X Y — Y X 0

005.1216.XX

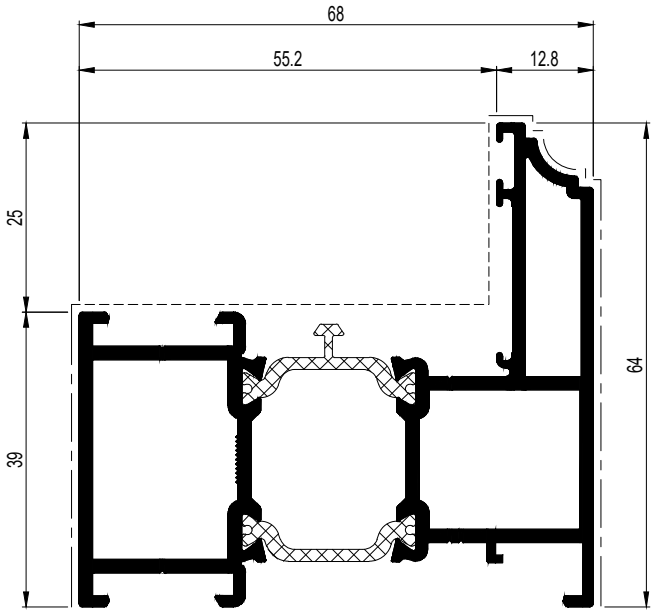

005.1236.XX

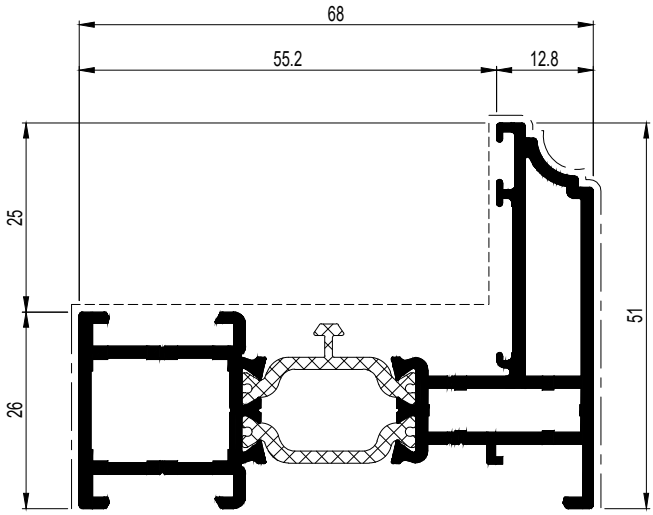

005.1216.XX	
068.7739.00	095.H800.00 of-ou-or-oder 095.B500.00
068.8839.00	097.W900.00 097.P100.00 097.P200.00 of-ou-or-oder 097.0375.00
068.8731.00+(*) or 068.8741.00+(*) (*) 050.5153.-- (2x)	097.P800.00 097.P100.00 097.P200.00 of-ou-or-oder 097.0374.00
068.8736.00 050.5153.-- (2x)	097.P800.00 097.P100.00 097.P200.00 of-ou-or-oder 097.0374.00
068.8731.00+(*) or 068.8741.00+(*) (*) 068.5920.00 (2x)	097.P800.00 097.P100.00 097.P200.00 of-ou-or-oder 097.0374.00
068.8736.00 068.5920.00 (2x)	097.P800.00 097.P100.00 097.P200.00 of-ou-or-oder 097.0374.00
068.8779.00 068.8906.04 060.8715/16.00	097.0009.00
068.8905.00 068.8906.04 (2x) 060.8715/16.00	097.0008.00
069.6566.04	---
060.8723.-- or 060.8746.00 060.8715/16.00	---

005.1236.XX	
068.7738.00	095.H800.00 of-ou-or-oder 095.B500.00
068.8838.00	097.W900.00 097.O900.00 097.P000.00 of-ou-or-oder 097.F800.00 of-ou-or-oder 097.0375.00
068.8730.00+(*) or 068.8740.00+(*) (*) 050.5153.--	097.P800.00 097.O900.00 097.P000.00 of-ou-or-oder 097.F800.00 of-ou-or-oder 097.0374.00
068.8735.00 050.5153.--	097.P800.00 097.O900.00 097.P000.00 of-ou-or-oder 097.F800.00 of-ou-or-oder 097.0374.00
068.8730.00+(*) or 068.8740.00+(*) (*) 068.5920.00	097.P800.00 097.O900.00 097.P000.00 of-ou-or-oder 097.F800.00 of-ou-or-oder 097.0374.00
068.8735.00 068.5920.00	097.P800.00 097.O900.00 097.P000.00 of-ou-or-oder 097.F800.00 of-ou-or-oder 097.0374.00
068.8779.00 060.8715/16.00	097.0009.00
068.8905.00 060.8715/16.00	097.0008.00
069.6565.04	---
060.8723.-- or 060.8746.00 060.8715/16.00	---

C

D0080985

CS 68-FP
EW 30

BUITENKADER
DORMANT
OUTER FRAME
BLENDRAHMEN

	A dm²/m	P dm²/m	Lm	Ix cm⁴	Wx cm³	ax mm	Iy cm⁴	Wy cm³	ay mm	
005.0258.XX	43.86	15.3	7.00	75.023	11.958	62.74	19.887	4.803	22.59	X Y Y X 0

005.0258.XX

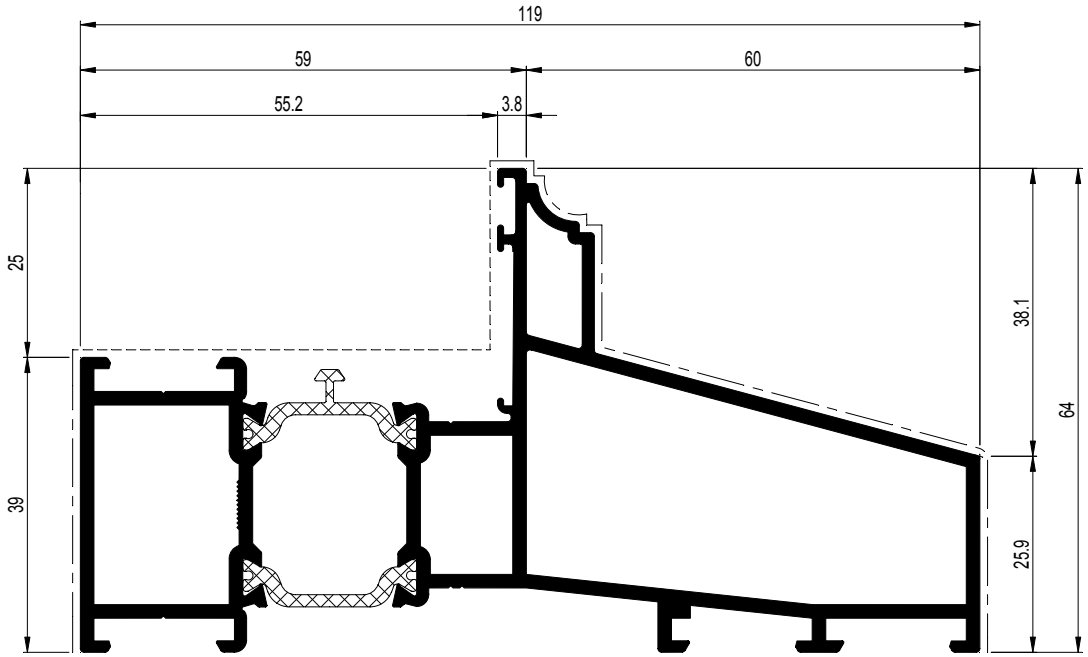

005.0258.XX	
068.7952.00 068.7853.00	095.H800.00 of-ou-or-oder 095.B500.00
068.8841.00	097.0375.00
068.7952.00 068.7853.00 050.5153.-- (2x) 068.5938.-- (2x)	097.0375.00
068.7952.00 068.7853.00 068.5920.-- (2x) 068.5938.-- (2x)	097.0375.00
068.8731.00+(*) or 068.8741.00+(*) (*) 050.5153.-- (2x)	097.0374.00
068.8736.00 050.5153.-- (2x)	097.0374.00
068.8731.00+(*) or 068.8741.00+(*) (*) 068.5920.-- (2x)	097.0374.00
068.8736.00 068.5920.-- (2x)	097.0374.00
068.8779.00 068.8906.04 060.8715/16.00	097.0009.00
068.8905.00 068.8906.04 (2x) 060.8715/16.00	097.0008.00
069.6566.04	---
060.8723.-- or 060.8746.00 060.8715/16.00	---

C

D0080987

CS 68-FP
EW 30

VLEUGEL
OUVRANT
VENT
FLUEGEL

	A dm²/m	P dm²/m	Lm	Ix cm⁴	Wx cm³	ax mm	Iy cm⁴	Wy cm³	ay mm
005.0202.XX	33.91	11.8	7.00	24.476	6.044	40.50	9.064	2.653	34.16
005.0292.XX	36.87	14.4	7.00	32.915	8.536	38.56	17.982	4.400	40.87

005.0202.XX

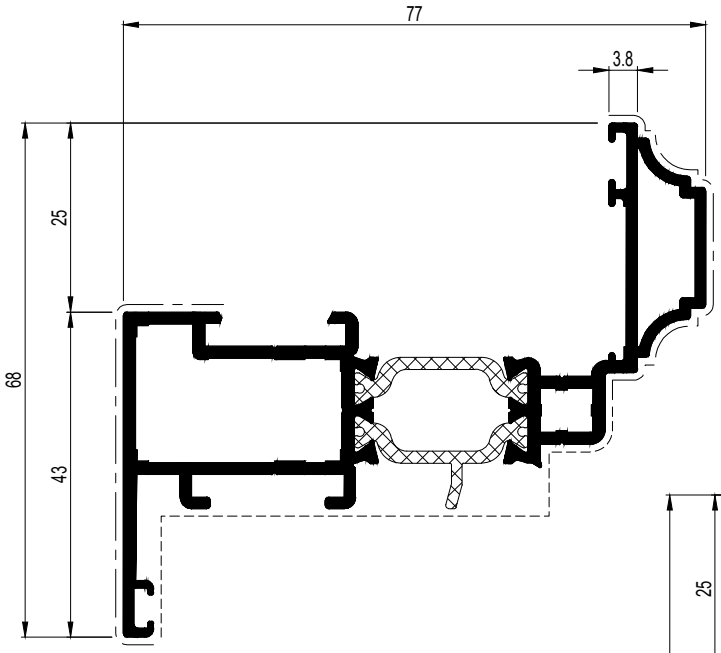

005.0292.XX

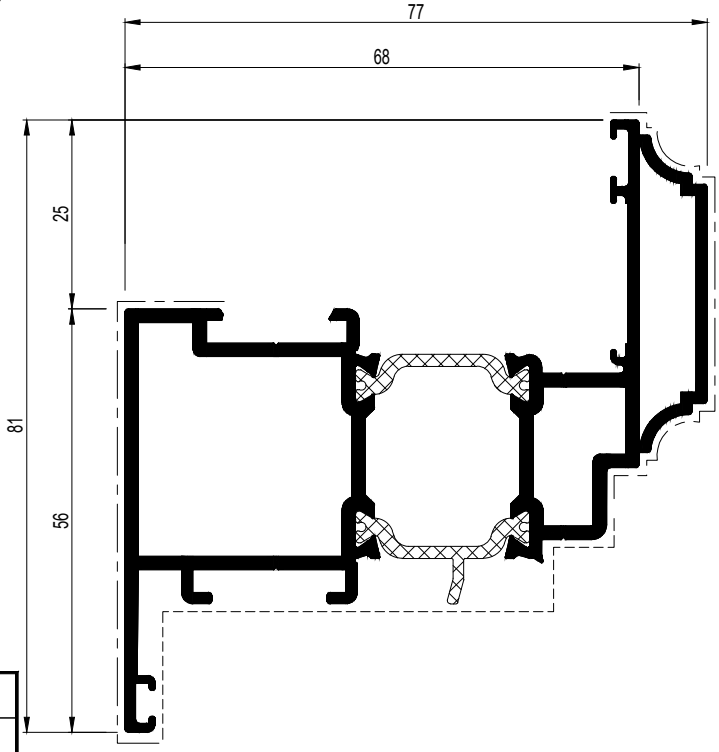

005.0202.XX	
068.7958.00 068.7859.00	095.H800.00 of-ou-or-oder 095.B500.00
068.8844.00	097.W900.00 097.O900.00 097.P000.00 of-ou-or-oder 097.F800.00 of-ou-or-oder 097.0375.00
068.7958.00 068.7859.00 050.5153.-- (2x) 068.5938.-- (2x)	097.W900.00 097.O900.00 097.P000.00 of-ou-or-oder 097.F800.00 of-ou-or-oder 097.0375.00
068.7958.00 068.7859.00 068.5920.-- (2x) 068.5938.-- (2x)	097.W900.00 097.O900.00 097.P000.00 of-ou-or-oder 097.F800.00 of-ou-or-oder 097.0375.00
068.8876.00 060.8715/16.00	097.0008.00
069.6565.04	---
060.8723.-- or 060.8746.00 060.8715/16.00	---

005.0292.XX	
068.7860.00 068.7861.00	095.H800.00 of-ou-or-oder 095.B500.00
068.8845.00	097.W900.00 097.P100.00 097.P200.00 of-ou-or-oder 097.0375.00
068.7860.00 068.7861.00 050.5153.-- (2x) 068.5938.-- (2x)	097.W900.00 097.P100.00 097.P200.00 of-ou-or-oder 097.0375.00
068.7860.00 068.7861.00 068.5920.-- (2x) 068.5938.-- (2x)	097.W900.00 097.P100.00 097.P200.00 of-ou-or-oder 097.0375.00
068.8976.00	---
068.8876.00 068.8906.04 (2x) 060.8715/16.00	097.0008.00
069.6566.04	---
060.8723.-- or 060.8746.00 060.8715/16.00	---

D0080988

C

CS 68-FP
EW 30

	A dm²/m	P dm²/m	Lm	Ix cm⁴	Wx cm³	ax mm	Iy cm⁴	Wy cm³	ay mm	
005.0221.XX	42.07	19.6	7.00	45.708	11.392	36.88	51.539	9.515	54.17	X Y Y X 0

005.0221.XX

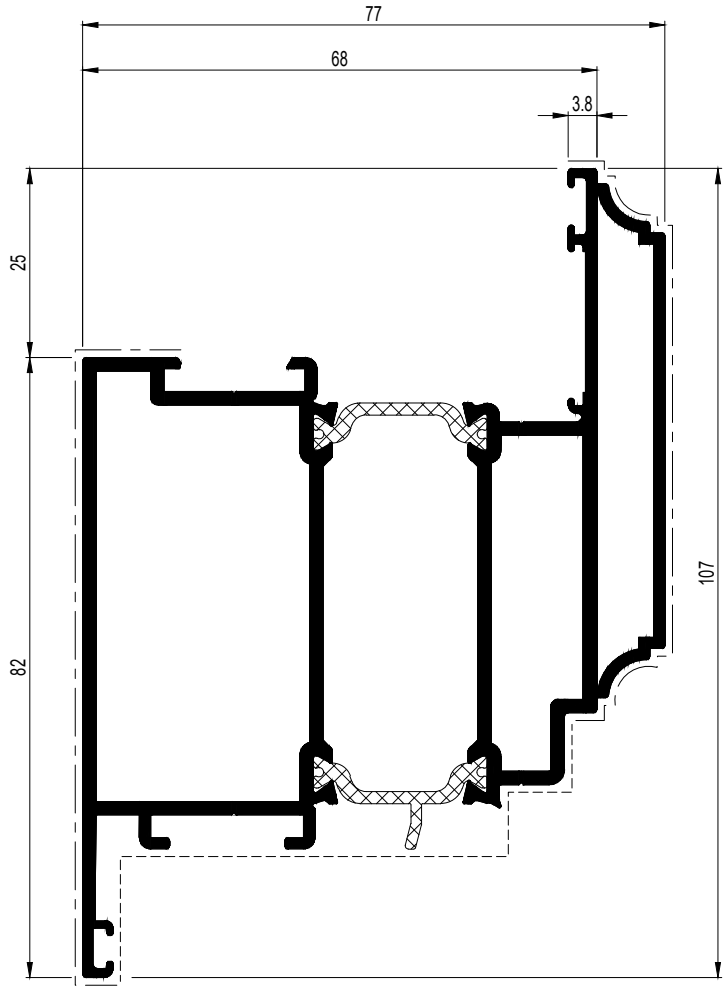

005.0221.XX	
068.7747.00	095.H800.00 of-ou-or-oder 095.B500.00
068.8847.00	097.W900.00 097.P100.00 097.P200.00 of-ou-or-oder 097.0375.00
068.8876.00 068.8906.04 (x6) 060.8715/16.00	097.0008.00
069.6568.04	---
060.8723.-- or 060.8746.00 060.8715/16.00	---

C

D0080990

CS 68-FP
EW 30

VLEUGEL DEUR NAAR BUITENDRAAIEND
OUVRANT PORTE OUVRANT VERS L'EXTERIEUR
VENT DOOR OUTWARD OPENING
FLUEGEL TUER NACH AUSSEN OEFFNEND

	A dm²/m	P dm²/m	Lm	Ix cm⁴	Wx cm³	ax mm	Iy cm⁴	Wy cm³	ay mm
005.0152.XX	40.53	18.1	7.00	45.833	10.613	33.81	54.120	10.386	50.89

X Y Y X 0

005.0152.XX

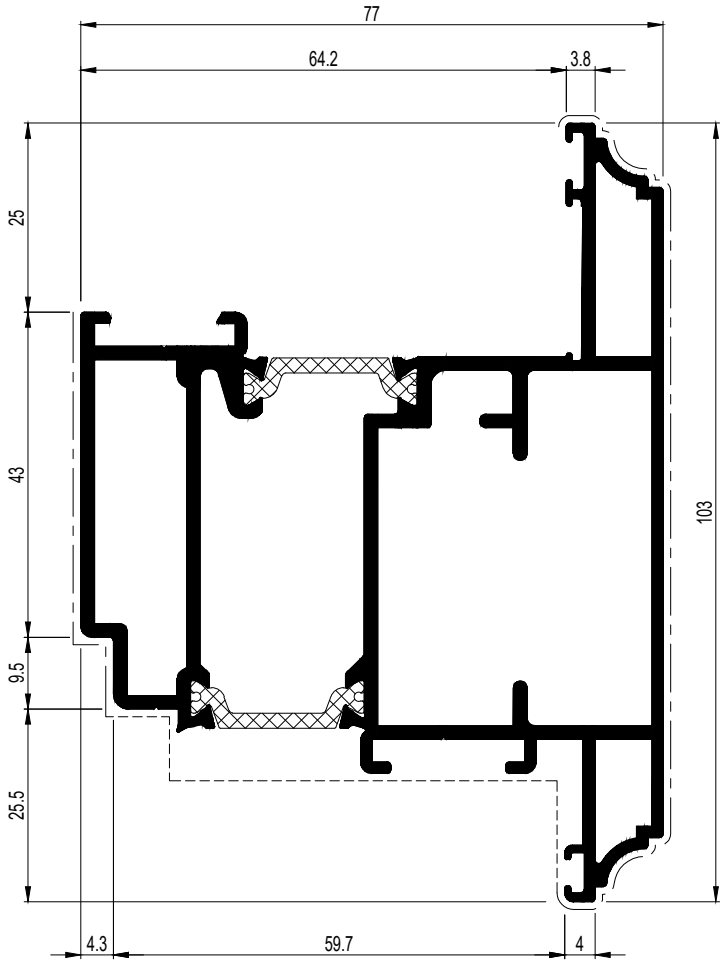

005.0152.XX	
068.7771.00	095.H800.00 of-ou-or-oder 095.B500.00
068.8871.00	097.W900.00 097.P100.00 097.P200.00 of-ou-or-oder 097.0375.00
060.8723.-- or 060.8746.00	---

D0080992

C

CS 68-FP
EW 30

STOLPPROFIEL
BATTEE CENTRALE FENETRE DOUBLE OUVRANTE
DOUBLE CASEMENT PROFILE
STULPPROFIL

	A dm²/m	P dm²/m	Lm	Ix cm⁴	Wx cm³	ax mm	Iy cm⁴	Wy cm³	ay mm
001.0215.XX	21.25	7.7	7.00	0.202	0.427	4.73	7.098	2.188	32.43

X
Y — Y
X 0

001.0215.XX

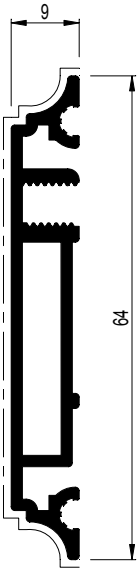

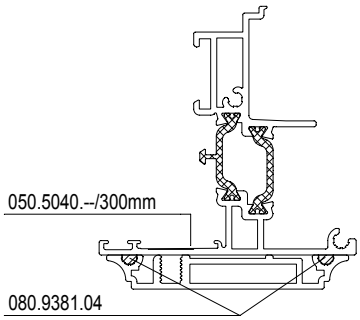

EINDSTUK BOUCHON PIECE FINALE END PART ENDKAPPE	069.6702.04 + 2 x 069.6648.XX

FREES FRAISE MILLING HEAD FRAESE	095.B101.00

C

D0080993

CS 68-FP
EW 30

T-PROFIEL
TRAVERSE
TRANSOM-MULLION
SPROSSE

	A dm²/m	P dm²/m	Lm	Ix cm⁴	Wx cm³	ax mm	Iy cm⁴	Wy cm³	ay mm
005.1213.XX	35.49	12.3	7.00	22.181	5.091	24.43	14.815	3.895	38.00
005.1220.XX	38.04	14.9	7.00	28.005	6.710	26.26	26.425	5.938	44.50

X Y Y X 0

005.1213.XX

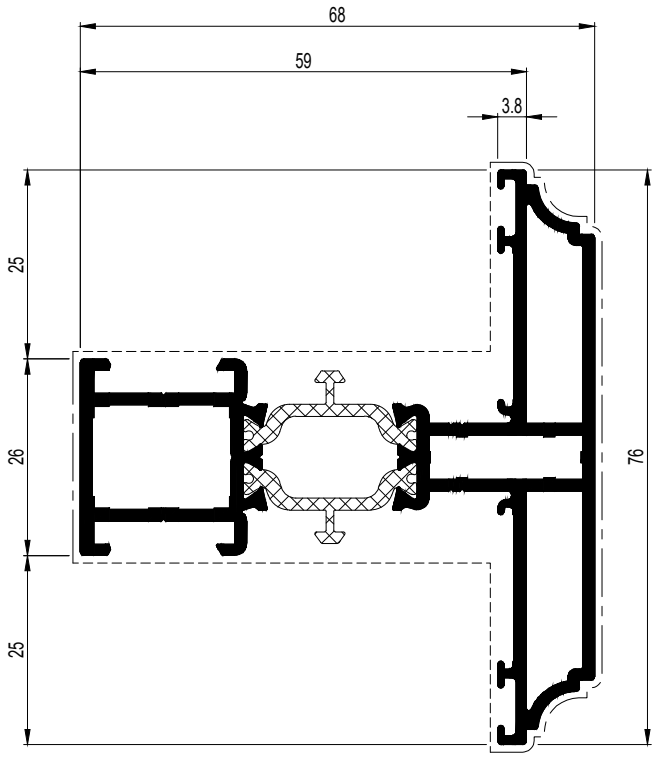

005.1220.XX

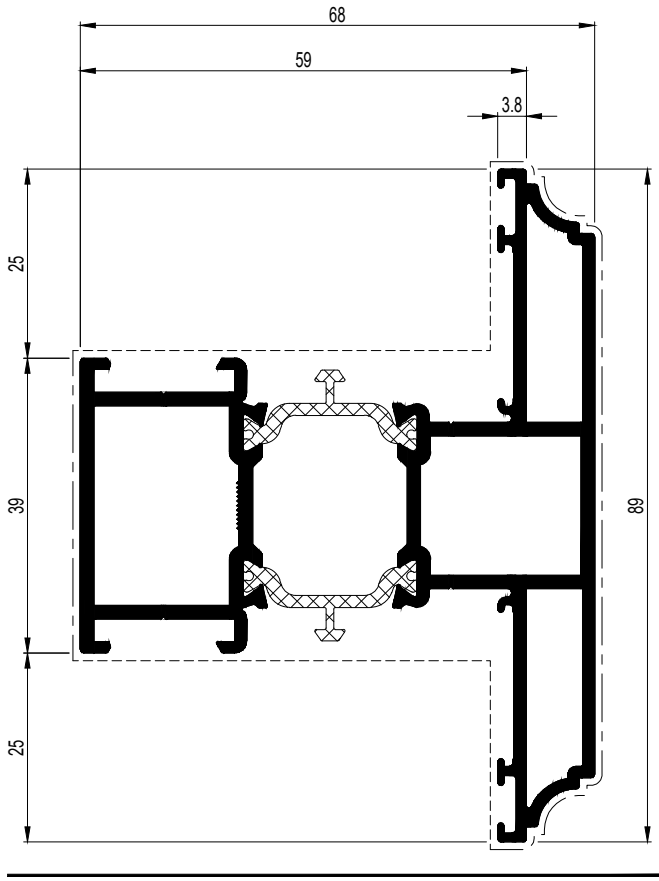

C

005.1213.XX	
068.7738.00	095.H800.00 of-ou-or-oder 095.B500.00
068.8838.00	097.W900.00 097.O900.00 097.P000.00 of-ou-or-oder 097.F800.00 of-ou-or-oder 097.0375.00
068.8730.00+(*) or 068.8740.00+(*) (*) 050.5153.--	097.P800.00 097.O900.00 097.P000.00 of-ou-or-oder 097.F800.00 of-ou-or-oder 097.0374.00
068.8735.00 050.5153.--	097.P800.00 097.O900.00 097.P000.00 of-ou-or-oder 097.F800.00 of-ou-or-oder 097.0374.00
068.8730.00+(*) or 068.8740.00+(*) (*) 068.5920.--	097.P800.00 097.O900.00 097.P000.00 of-ou-or-oder 097.F800.00 of-ou-or-oder 097.0374.00
068.8735.00 068.5920.--	097.P800.00 097.O900.00 097.P000.00 of-ou-or-oder 097.F800.00 of-ou-or-oder 097.0374.00
068.8779.00 060.8715/16.00 (2x)	097.0009.00
068.8905.00 060.8715/16.00 (2x)	097.0008.00
069.6565.04	---
060.8723.-- (2x) or 060.8746.00 (2x) 060.8715/16.00 (2x)	---

005.1220.XX	
068.7739.00	095.H800.00 of-ou-or-oder 095.B500.00
068.8839.00	097.W900.00 097.P100.00 097.P200.00 of-ou-or-oder 097.0375.00
068.8731.00+(*) or 068.8741.00+(*) (*) 050.5153.-- (2x)	097.P800.00 097.P100.00 097.P200.00 of-ou-or-oder 097.0374.00
068.8736.00 050.5153.-- (2x)	097.P800.00 097.P100.00 097.P200.00 of-ou-or-oder 097.0374.00
068.8731.00+(*) or 068.8741.00+(*) (*) 068.5920.-- (2x)	097.P800.00 097.P100.00 097.P200.00 of-ou-or-oder 097.0374.00
068.8736.00 068.5920.-- (2x)	097.P800.00 097.P100.00 097.P200.00 of-ou-or-oder 097.0374.00
068.8779.00 068.8906.04 060.8715/16.00 (2x)	097.0009.00
068.8905.00 068.8906.04 (2x) 060.8715/16.00 (2x)	097.0008.00
069.6566.04	---
060.8723.-- (2x) or 060.8746.00 (2x) 060.8715/16.00 (2x)	---

D0080996

CS 68-FP
EW 30

GLASLAT
PARCLOSE
GLAZING BEAD
GLASLEISTE

	A dm²/m	P dm²/m	Lm	Ix cm⁴	Wx cm³	ax mm	Iy cm⁴	Wy cm³	ay mm
001.0200.XX	14.74	3.7	7.00	0.356	0.310	11.49	0.778	0.512	15.20
001.0201.XX	18.34	4.6	7.00	1.105	0.710	15.56	1.034	0.640	12.64
005.0226.XX	16.37	4.4	7.00	0.950	0.563	16.87	0.775	0.652	11.31
005.0227.XX	19.97	5.3	7.00	1.276	0.753	16.95	1.782	1.069	15.53
008.0226.XX	19.62	5.5	7.00	1.288	0.690	18.68	1.112	0.606	18.36
008.0227.XX	23.22	6.4	7.00	2.584	1.114	23.20	1.438	0.791	18.18

001.0200.XX

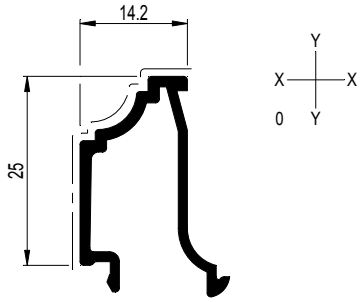

001.0201.XX

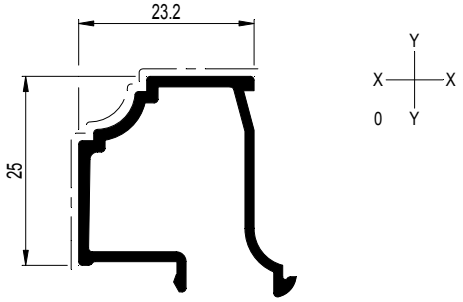

005.0226.XX

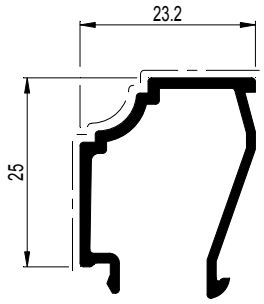

005.0227.XX

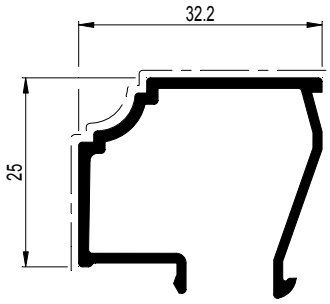

008.0226.XX

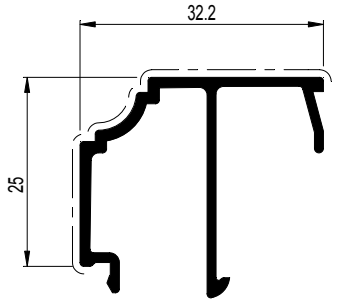

008.0227.XX

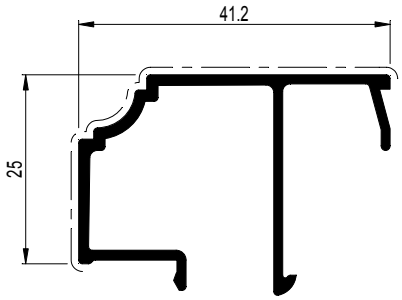

Beglazingstabel zie pagina 12.F....
Tableau de vitrage voir page 12.F....
Glazing table see page 12.F....
Verglasungstabelle Siehe Seite 12.F....

D0080998

C

CS 68-FP
EW 30

BUITENKADER DEUR
DORMANT PORTE
OUTER FRAME DOOR
BLENDRAHMEN TUER

	A dm²/m	P dm²/m	Lm	Ix cm⁴	Wx cm³	ax mm	Iy cm⁴	Wy cm³	ay mm
005.0569.XX	30.93	15.4	7.00	23.380	7.709	28.67	23.862	5.299	32.97
005.0598.XX	30.76	13.6	7.00	29.618	8.604	24.58	31.012	7.018	32.82
005.1869.XX	28.93	14.3	7.00	20.459	6.875	29.24	15.231	3.804	27.96
005.1898.XX	28.92	13.3	7.00	19.704	5.733	24.63	20.534	5.170	28.28

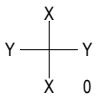

005.1869.XX

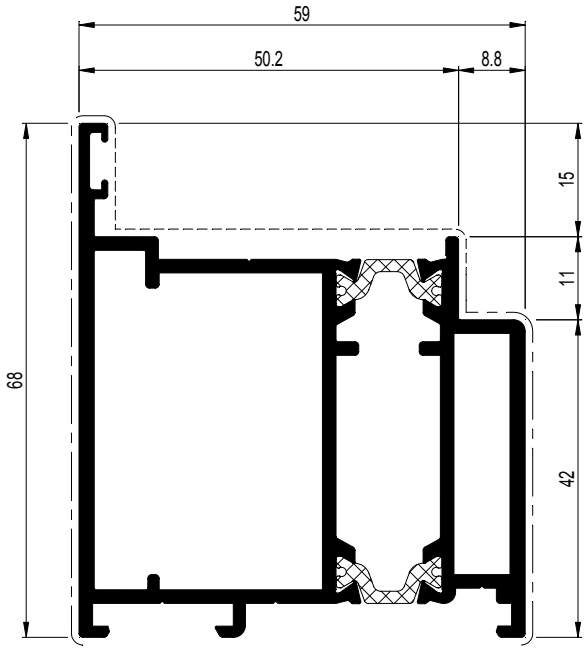

005.1898.XX

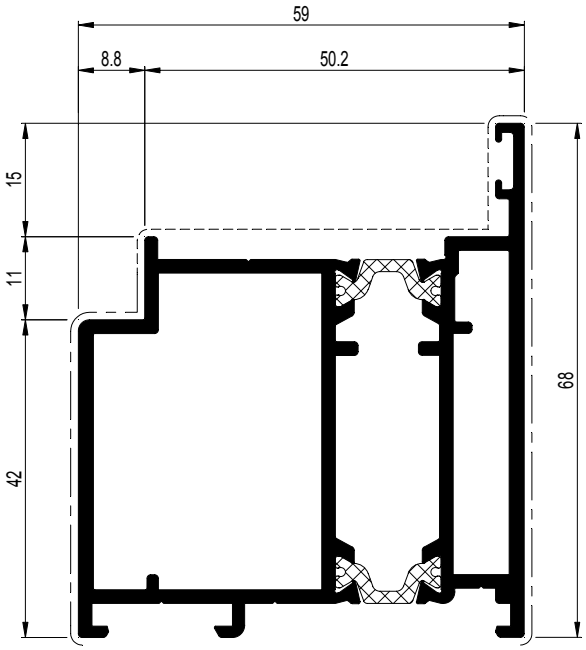

005.0569.XX

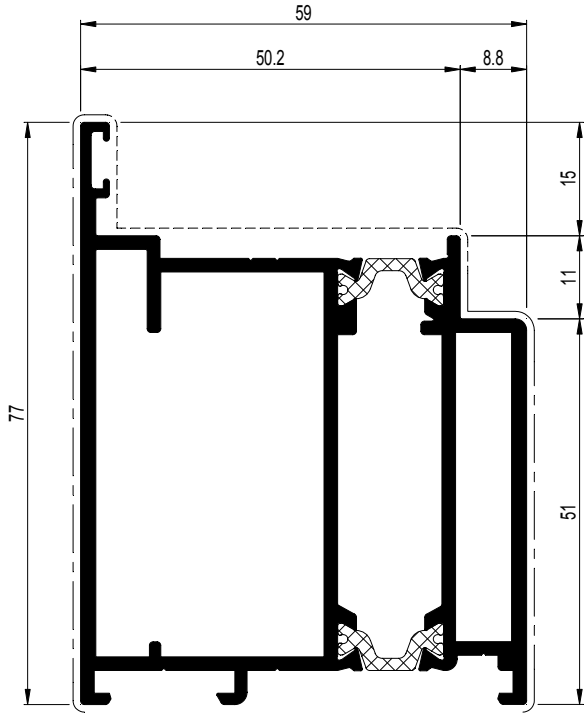

005.0598.XX

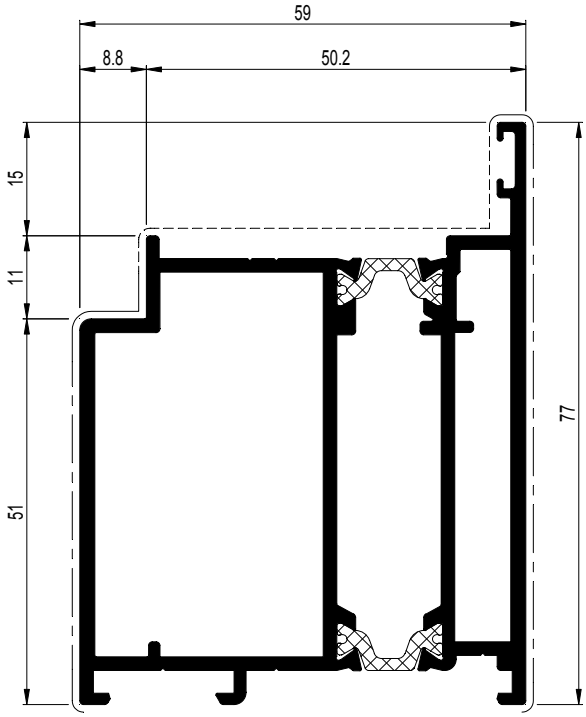

005.0569.XX	
068.7797.00	095.H800.00 of-ou-or-oder 095.B500.00
068.8807.00	097.P500.00 097.T400.00
068.8817.00	097.P300.00 097.P500.00

005.0598.XX	
068.7797.00	095.H800.00 of-ou-or-oder 095.B500.00
068.8807.00	097.P500.00 097.T400.00
068.8817.00	097.P300.00 097.P500.00

005.1869.XX	
068.7794.00	095.H800.00 of-ou-or-oder 095.B500.00
068.8805.00	097.P300.00 097.P500.00

005.1898.XX	
068.7794.00	095.H800.00 of-ou-or-oder 095.B500.00
068.8805.00	097.P300.00 097.P500.00

D0081004

CS 68-FP
EW 30

VLEUGEL DEUR
OUVRANT PORTE
VENT DOOR
FLUEGEL TUER

	A dm²/m	P dm²/m	Lm	Ix cm⁴	Wx cm³	ax mm	Iy cm⁴	Wy cm³	ay mm
005.3014.XX	39.18	15.4	7.00	23.865	6.672	23.23	39.685	7.237	54.84
005.3026.XX	37.00	17.5	7.00	25.785	8.166	27.42	40.378	7.339	46.98

X Y Y X 0

005.3014.XX

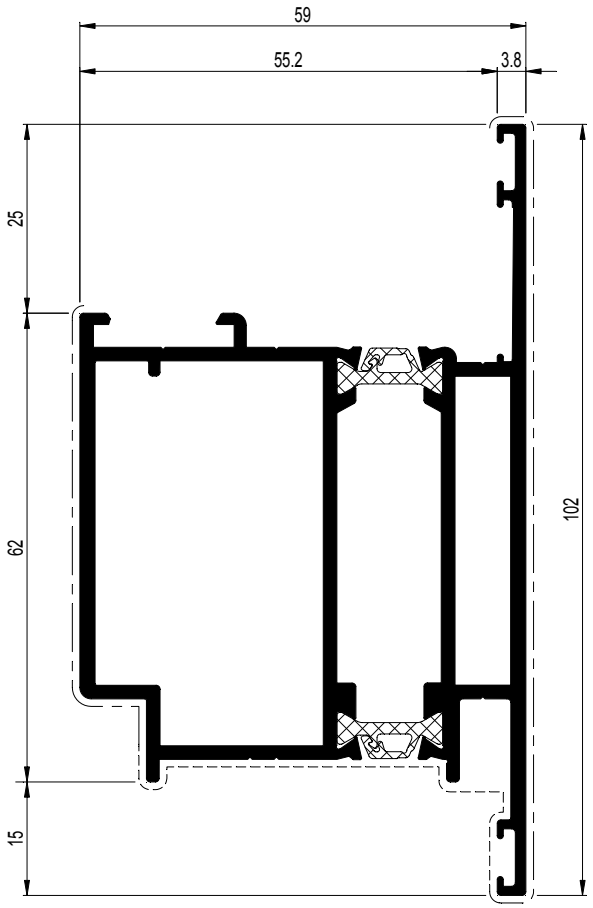

005.3026.XX

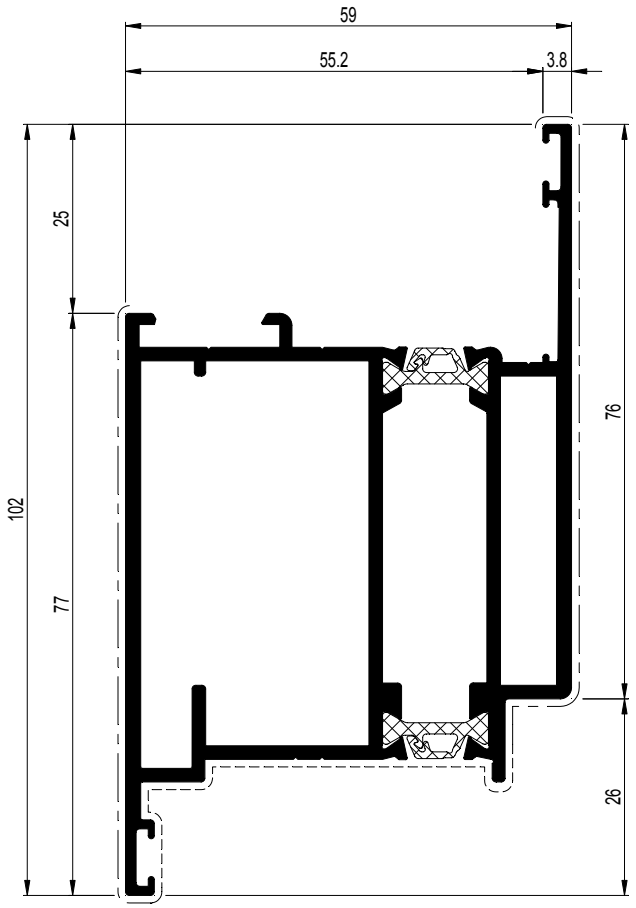

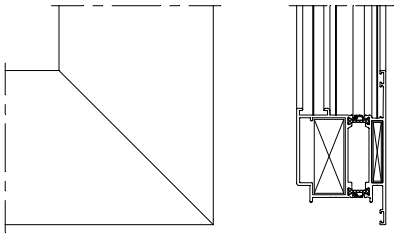

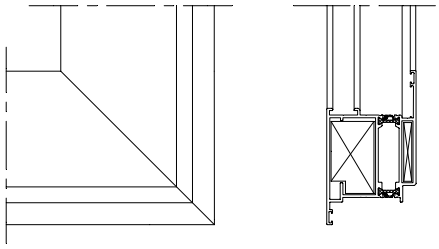

005.3014.XX	
068.7797.00 or 068.8807.00	095.H800.00 of-ou-or-oder 095.B500.00
068.8807.00	097.P500.00 097.T400.00
068.8817.00	097.P300.00 097.P500.00
060.8723.-- or 060.8746.00	---

005.3026.XX	
068.7797.00 or 068.8807.00	095.H800.00 of-ou-or-oder 095.B500.00
068.8807.00	097.P500.00 097.T400.00
068.8817.00	097.P300.00 097.P500.00
060.8723.-- or 060.8746.00	---

C

D0081005

CS 68-FP
EW 30

STOLPPROFIEL DEUR
BATTEE CENTRALE DOUBLE OUVRANT PORTE
DOUBLE CASEMENT PROFILE DOOR
STULPPROFIL TUER

	A dm²/m	P dm²/m	Lm	Ix cm⁴	Wx cm³	ax mm	Iy cm⁴	Wy cm³	ay mm
005.1815.XX	22.89	4.7	7.00	10.875	3.434	31.67	4.490	1.605	18.02
005.2015.XX	26.14	7.7	7.00	7.917	2.147	19.92	3.928	1.479	19.43

X Y Y X 0

005.2015.XX

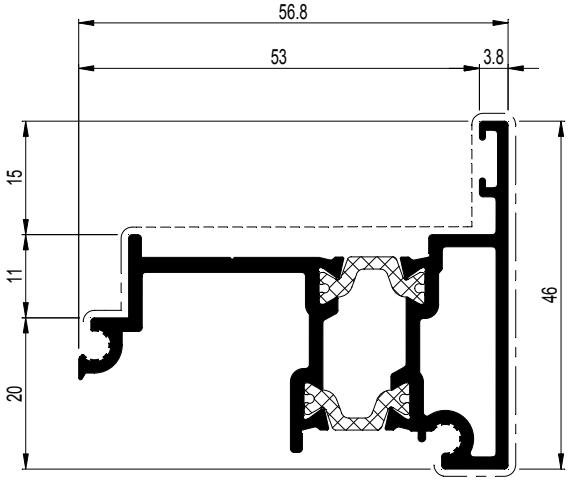

005.1815.XX

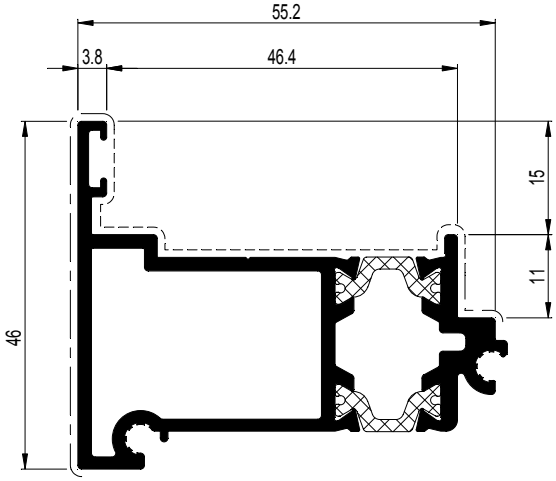

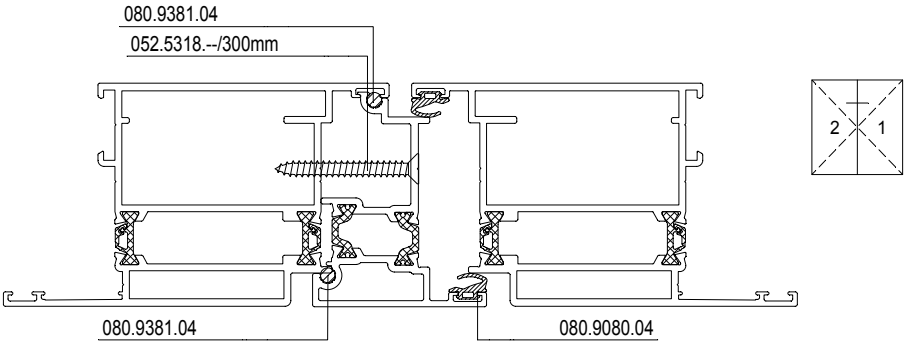

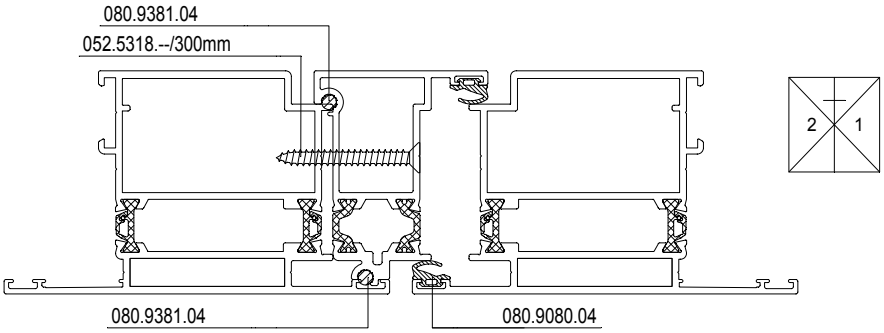

C

D0081007

STOLPPROFIEL DEUR
BATTEE CENTRALE DOUBLE OUVRANT PORTE
DOUBLE CASEMENT PROFILE DOOR
STULPPROFIL TUER

	A dm²/m	P dm²/m	Lm	Ix cm⁴	Wx cm³	ax mm	Iy cm⁴	Wy cm³	ay mm
005.2015.XX	26,14	7,7	6,00	7,917	2,147	19,92	3,928	1,479	19,43

X Y Y X 0

005.2015.XX

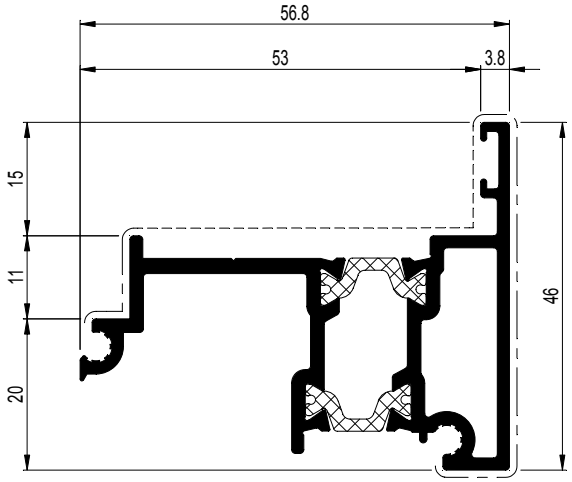

C

D0092068

CS 68-FP
EW 30

OMKEERPROFIEL
PROFILE INVERSION
CHANGEOVER PROFILE
WECHSELPROFIL

	A dm²/m	P dm²/m	Lm	Ix cm⁴	Wx cm³	ax mm	Iy cm⁴	Wy cm³	ay mm
005.1028.XX	24.06	6.3	7.00	16.023	5.206	30.78	7.428	2.386	22.87

X Y Y X 0

005.1028.XX

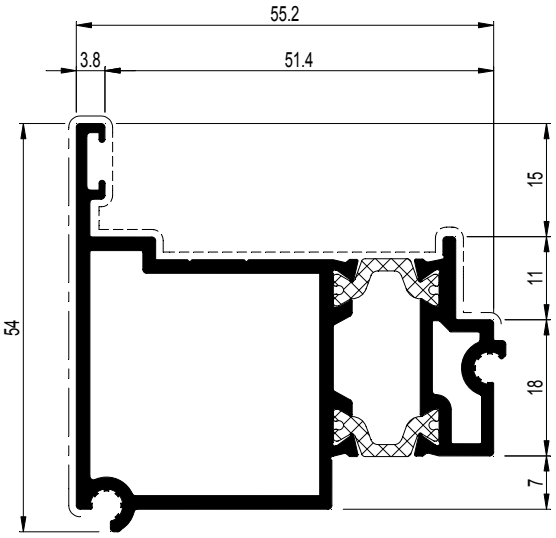

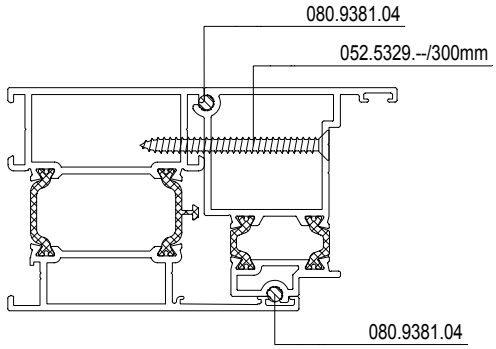

C

D0081008

CS 68-FP
EW 30

AANSLAGPROFIEL DEUR
PROFILE DE BUTEE PORTE
CONNECTION PROFILE DOOR
ANSCHLAGPROFIL TUER

	A dm²/m	P dm²/m	Lm	Ix cm⁴	Wx cm³	ax mm	Iy cm⁴	Wy cm³	ay mm
005.2027.XX	25.02	7.5	7.00	13.283	4.044	26.15	8.280	2.613	23.81
005.2029.XX	15.47	5.7	7.00	1.679	0.768	21.87	0.207	0.249	8.31

005.2027.XX

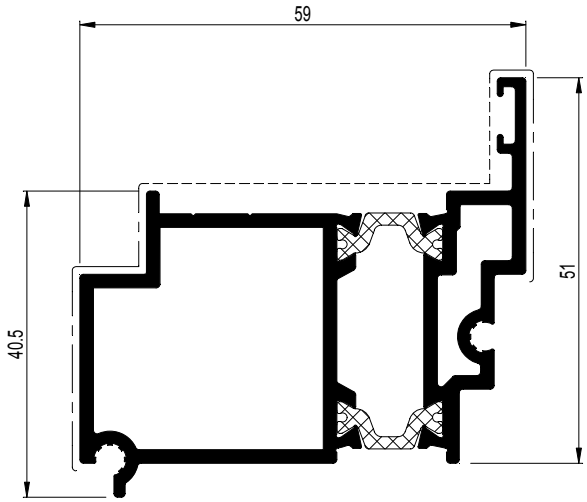

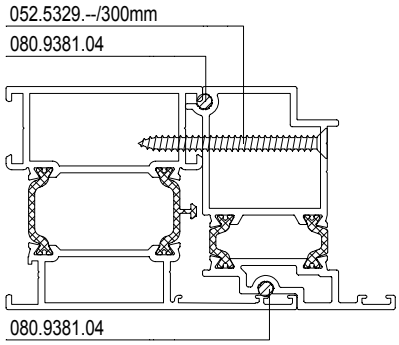

005.2029.XX

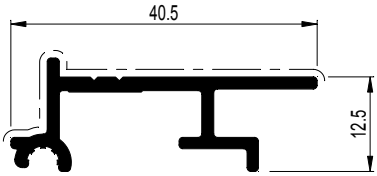

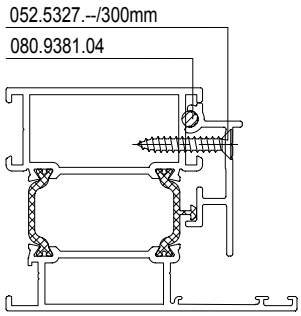

C

D0081010

CS 68-FP
EW 30

BODEMPROFIEL
PROFILE DE SEUIL
FLOOR PROFILE
ZUSATZPROFIL

	A dm²/m	P dm²/m	Lm	Ix cm⁴	Wx cm³	ax mm	Iy cm⁴	Wy cm³	ay mm
005.0071.XX	9.60	4.9	6.00	1.390	0.645	21.46	0.012	0.050	2.32
005.0873.XX	18.76	4.8	7.00	0.858	0.756	6.65	7.926	2.363	33.54
005.0874.XX	19.06	3.9	7.00	0.822	0.720	6.58	7.665	2.529	28.70
108.0080.XX	14.01	2.6	6.00	1.255	0.651	18.24	0.170	0.231	7.19
108.0081.XX	8.37	1.4	6.00	0.283	0.221	12.81	0.061	0.072	4.49
108.0082.XX	8.19	2.7	6.00	0.090	0.100	3.04	0.294	0.213	13.83

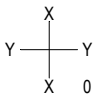

005.0071.XX

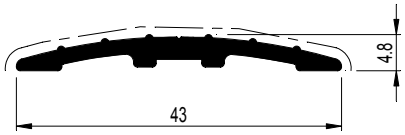

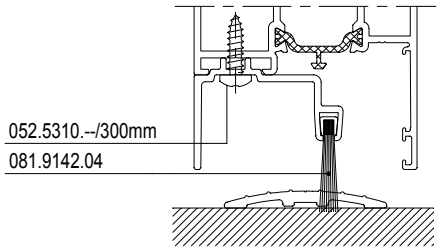

005.0873.XX

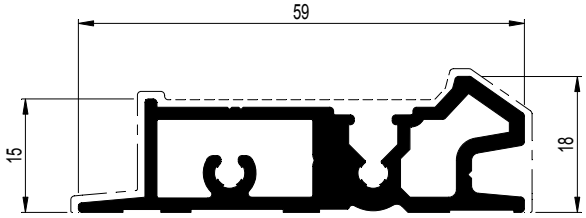

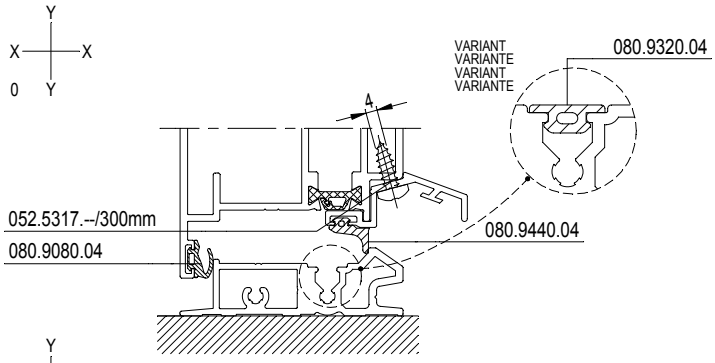

005.0874.XX

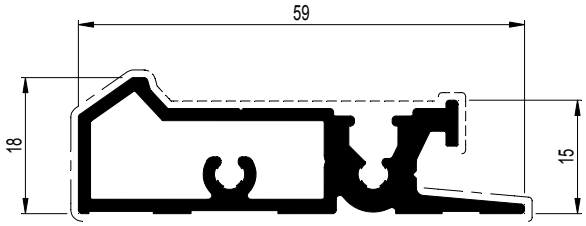

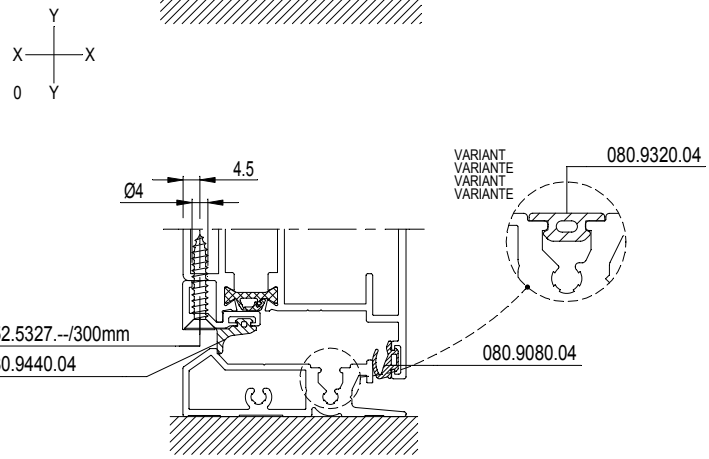

108.0080.XX

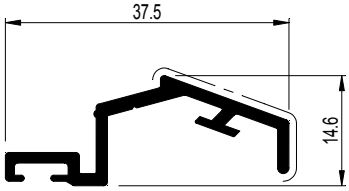

108.0081.XX

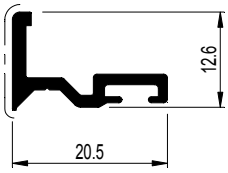

108.0082.XX

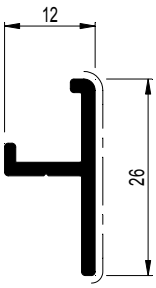

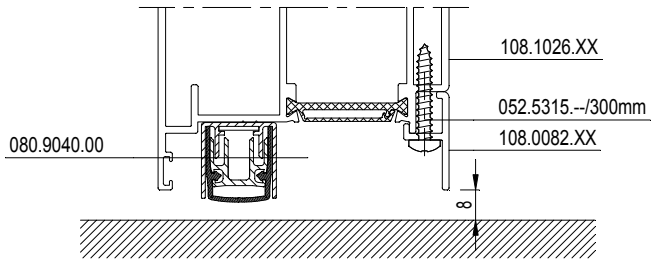

D0081014

CS 68-FP
EW 30

BODEMPROFIEL
PROFILE DE SEUIL
FLOOR PROFILE
ZUSATZPROFIL

	A dm²/m	P dm²/m	Lm	Ix cm⁴	Wx cm³	ax mm	Iy cm⁴	Wy cm³	ay mm
005.0875.XX	25.78	9.4	7.00	12.140	3.178	25.38	2.728	0.948	28.76
005.0876.XX	25.21	6.9	7.00	11.627	3.571	26.45	2.683	0.936	28.68

X Y Y X 0

005.0875.XX

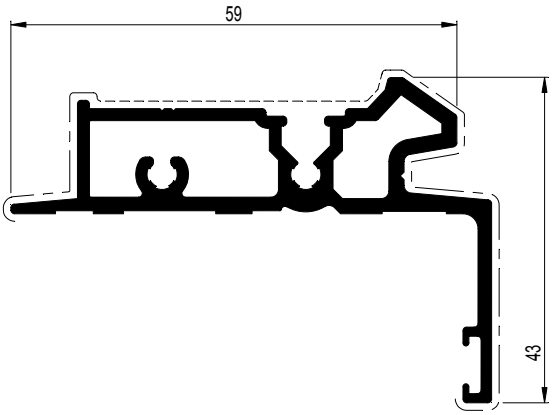

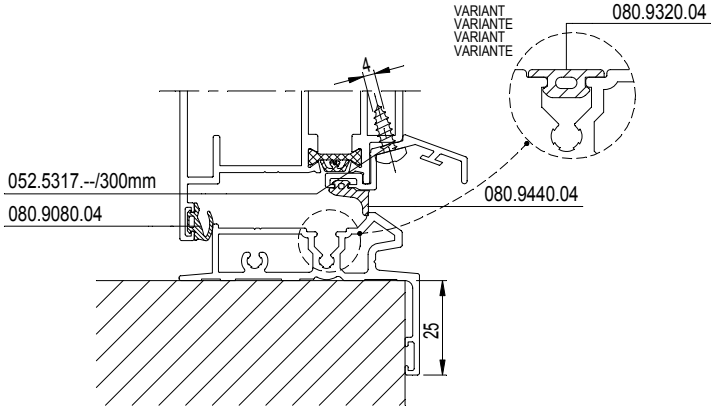

005.0876.XX

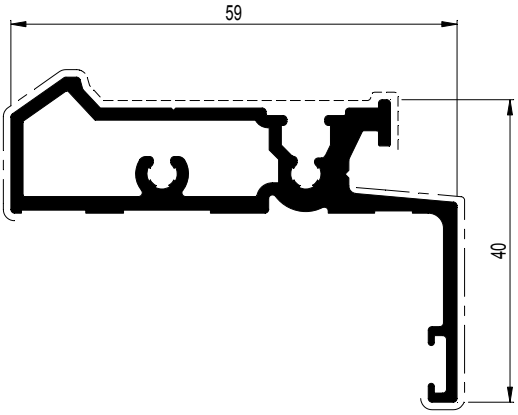

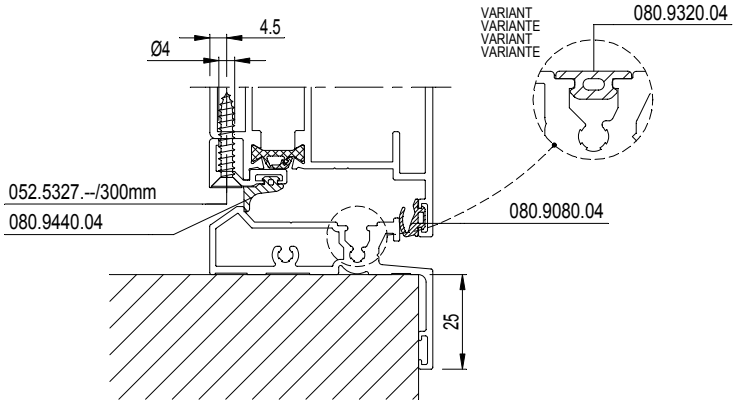

C

D0081017

CS 68-FP
EW 30

BORSTELPROFIEL
PROFILE SUPPORT JOINT-BROSSE
SUPPORTING PROFILE BRUSH
ZUSATZPROFIL BUERSTENDICHTUNG

	A dm²/m	P dm²/m	Lm	Ix cm⁴	Wx cm³	ax mm	Iy cm⁴	Wy cm³	ay mm
005.0033.XX	16.52	2.6	6.00	0.702	0.403	17.42	2.057	1.092	18.77
005.0049.XX	17.41	4.1	6.00	0.958	0.669	14.32	0.853	0.480	17.79
005.0177.XX	18.26	2.7	7.00	3.378	1.344	17.16	0.394	0.299	13.18
005.1175.XX	14.63	2.7	7.00	1.019	0.600	16.98	0.378	0.273	12.16
005.2034.XX	19.60	2.6	6.00	4.064	1.666	18.96	0.856	0.458	10.79
016.1534.XX	20.97	2.6	6.00	3.625	1.575	23.01	1.237	0.791	15.64

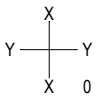

005.2034.XX

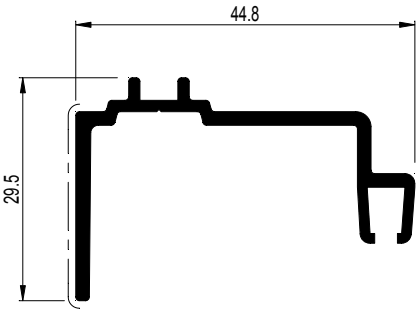

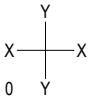

005.0033.XX

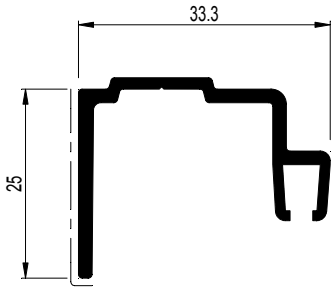

005.1175.XX

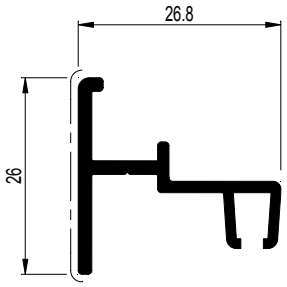

016.1534.XX

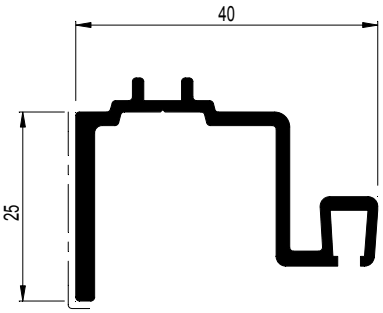

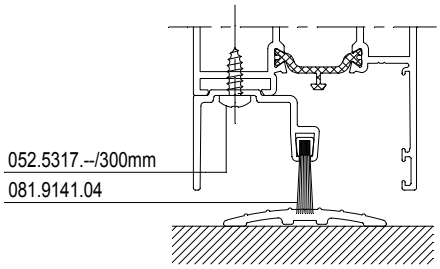

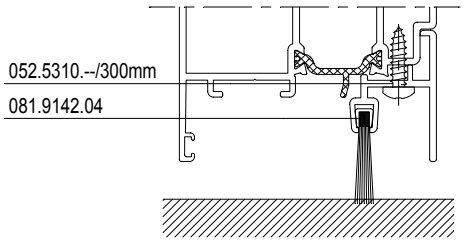

005.0177.XX

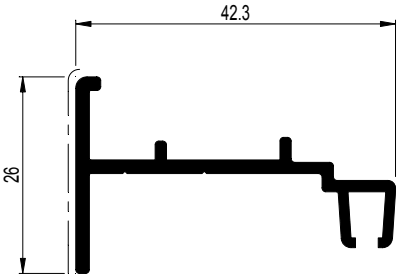

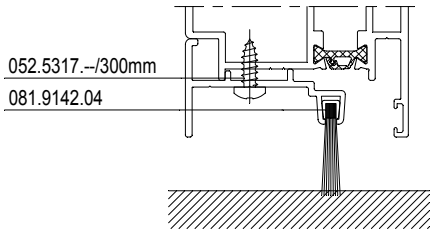

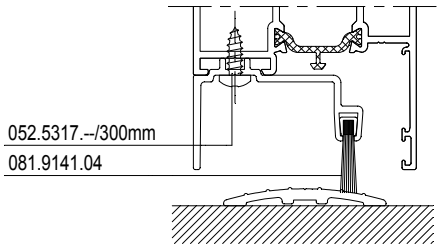

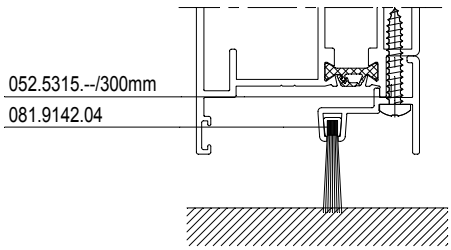

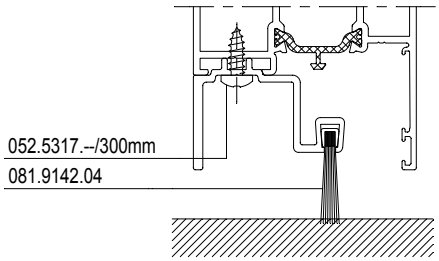

005.0049.XX

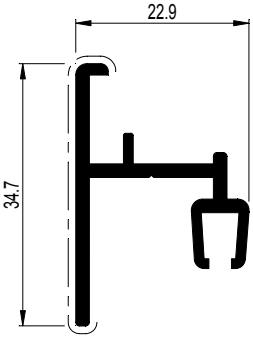

D0081018

C

CS 68-FP
EW 30

GLASLATTEN INBRAAKWEREND
PARCLOSES PROTECTION ANTI-VOL
GLAZING BEADS BURGLAR PROTECTION
GLASLEISTEN EINBRUCHHEMMEND

	A dm²/m	P dm²/m	Lm	Ix cm⁴	Wx cm³	ax mm	Iy cm⁴	Wy cm³	ay mm
030.3647.XX	9.74	3.7	7.00	0.376	0.315	11.94	1.072	0.699	12.86
030.3648.XX	9.83	4.0	7.00	0.447	0.398	11.23	1.148	0.780	13.48
030.3649.XX	9.94	4.3	7.00	0.548	0.520	10.55	1.211	0.857	14.13
030.3650.XX	10.37	4.6	7.00	0.736	0.703	10.47	1.297	0.898	14.44
030.3651.XX	10.87	4.9	7.00	0.983	0.800	10.92	1.390	0.949	13.55
030.3652.XX	11.34	5.2	7.00	1.262	0.890	12.03	1.467	0.983	13.27
030.3653.XX	11.84	5.5	7.00	1.595	0.996	13.18	1.544	1.018	13.04
030.3654.XX	12.50	5.8	7.00	1.745	0.940	13.63	1.543	0.964	12.19
030.3655.XX	13.05	6.1	7.00	2.162	1.058	14.77	1.598	0.982	11.92
030.3667.XX	11.54	4.6	7.00	1.137	0.707	16.08	1.433	0.964	13.35
030.3668.XX	11.69	4.9	7.00	1.304	0.849	15.36	1.503	1.046	13.84
030.3669.XX	11.81	5.2	7.00	1.471	0.997	14.76	1.569	1.096	14.31
030.3670.XX	12.17	5.5	7.00	1.768	1.196	14.78	1.645	1.125	14.63

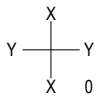

030.3647.XX

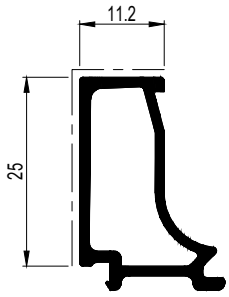

030.3648.XX

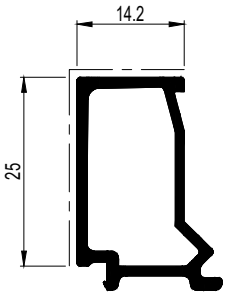

030.3649.XX

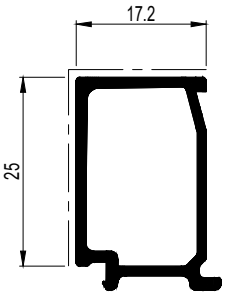

030.3650.XX

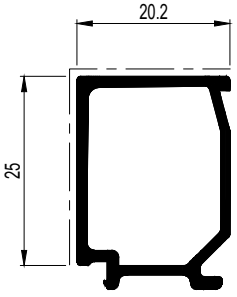

030.3651.XX

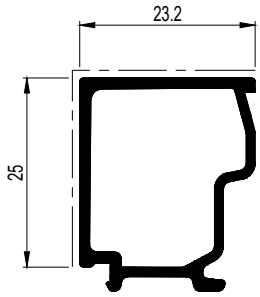

030.3652.XX

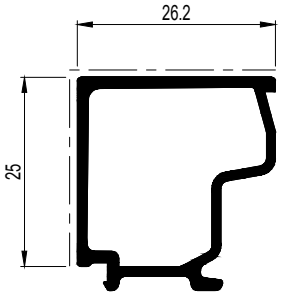

030.3653.XX

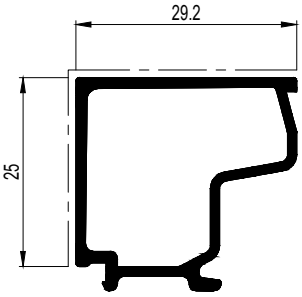

030.3654.XX

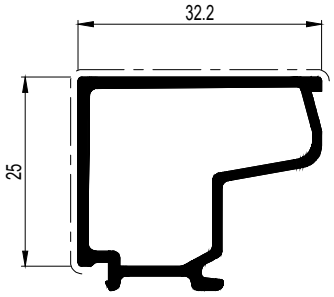

030.3655.XX

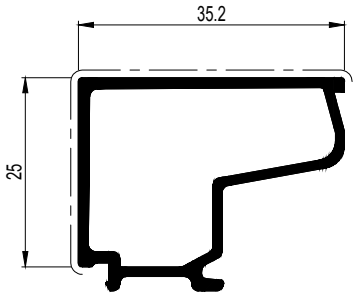

030.3667.XX

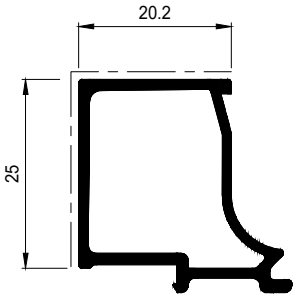

030.3668.XX

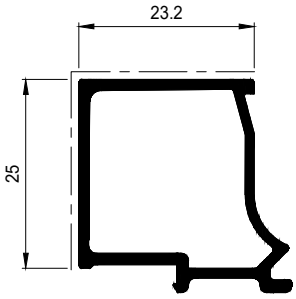

030.3669.XX

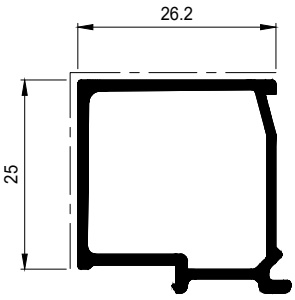

030.3670.XX

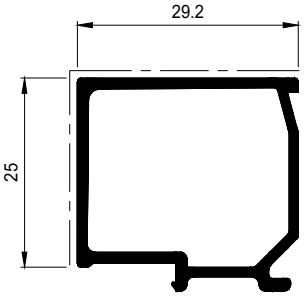

D0082869

C

CS 68-FP
EW 30

BORSTELPROFIEL PIVOTDEUR
PROFILE SUPPORT JOINT-BROSSE PORTE PIVOTANTE
SUPPORTING PROFILE BRUSH PIVOT DEUR
ZUSATZPROFIL BUERSTENDICHTUNG PIVOTTEUR

	A dm²/m	P dm²/m	Lm	Ix cm⁴	Wx cm³	ax mm	Iy cm⁴	Wy cm³	ay mm
005.1174.XX	20.28	2.7	7.00	5.748	1.866	30.81	0.397	0.304	12.94

X
Y Y
X 0

005.1174.XX

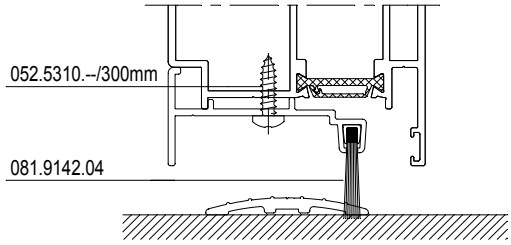

C

D0082110

E

Reynaers Aluminium

Werktekeningen

Coupes et débits

Work drawings

Werkzeichnungen

CS 68-FP

SAMENGESTELD RAAM NAAR BINNENDRAAIEND
CHASSIS COMPOSEE OUVRANT VERS L'INTERIEUR
COMBINED WINDOW INWARD OPENING
FENSTER MIT FESTEN PFOSTEN NACH INNEN OEFFNEND

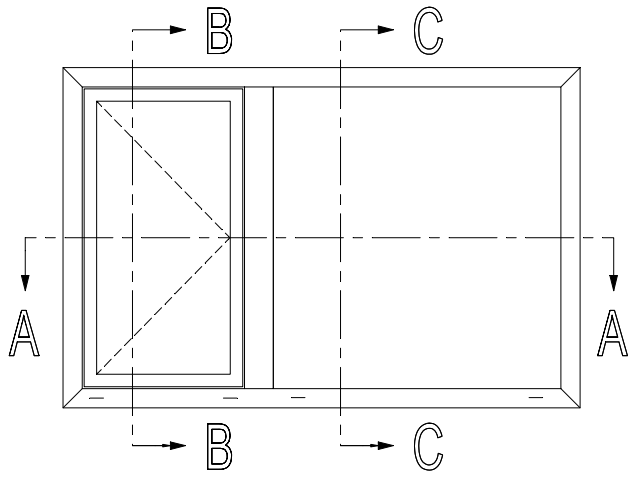

b1 = B1 - 132
h1 = H - 140
b2 = B2 - 51
h2 = H - 64

A - A

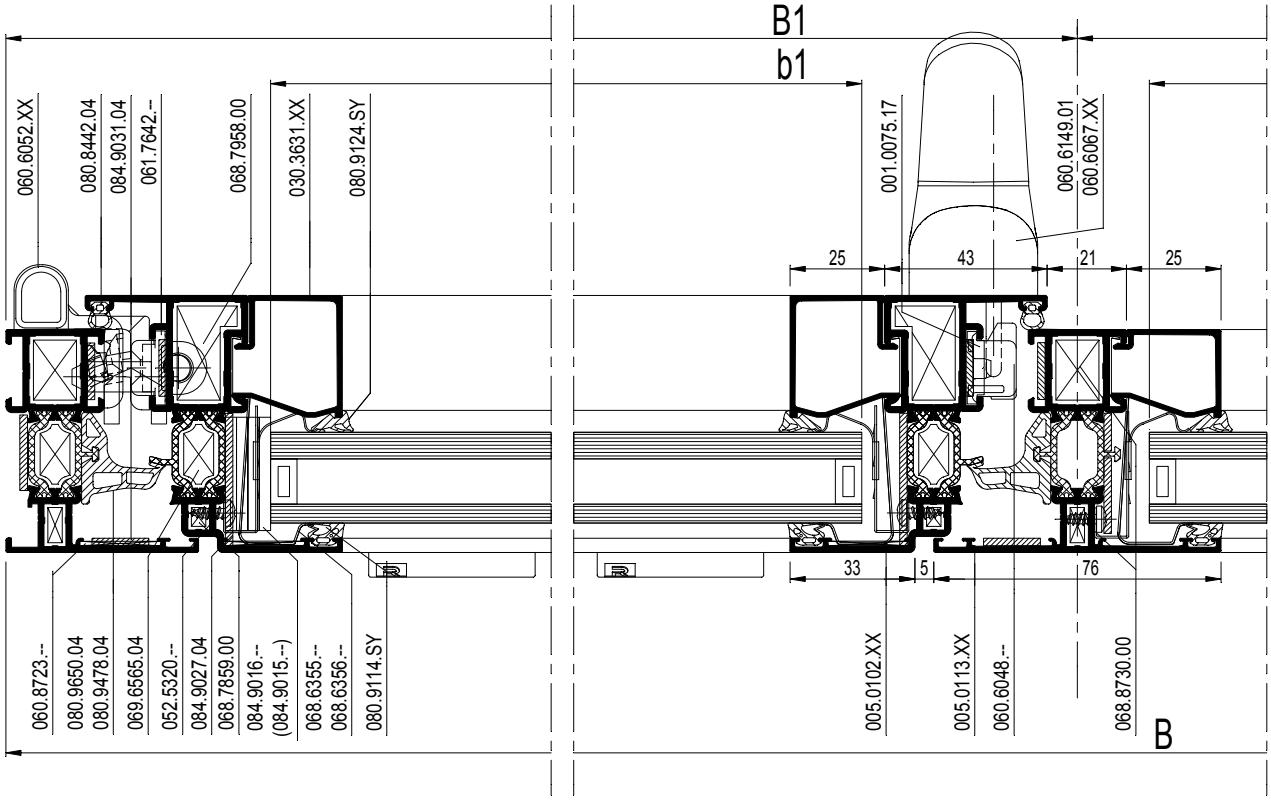

schaal - échelle
scale - Maßstab
1/2

D0093495

E

CS 68-FP

SAMENGESTELD RAAM NAAR BINNENDRAAIEND
CHASSIS COMPOSEE OUVRANT VERS L'INTERIEUR
COMBINED WINDOW INWARD OPENING
FENSTER MIT FESTEN PFOSTEN NACH INNEN OEFFNEND

		#	Lm
005.0136.XX		2	B
		2	H
005.0102.XX		2	B1 - 29
		2	H - 42
005.0113.XX		1	H - 52
030.3611.XX		2	B2 - 39
		2	H - 102
030.3631.XX		2	B1 - 120
		2	H - 178
001.0075.17		-	15E.F....

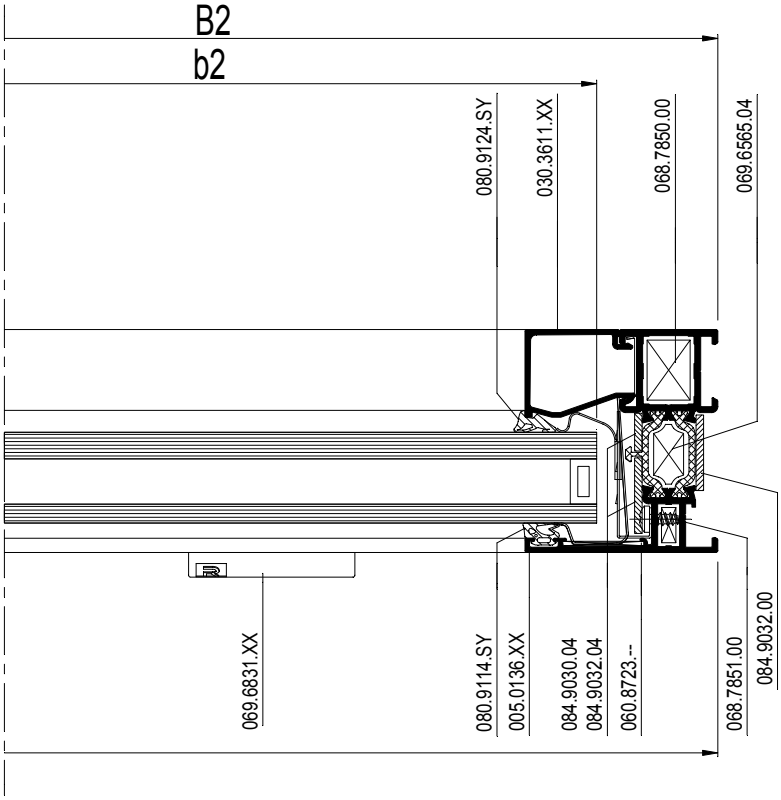

schaal - échelle
scale - Maßstab
1/2

D0093495

E

CS 68-FP
EW 30

SAMENGESTELD RAAM NAAR BINNENDRAAIEND
CHASSIS COMPOSEE OUVRANT VERS L'INTERIEUR
COMBINED WINDOW INWARD OPENING
FENSTER MIT FESTEN PFOSTEN NACH INNEN OEFFNEND

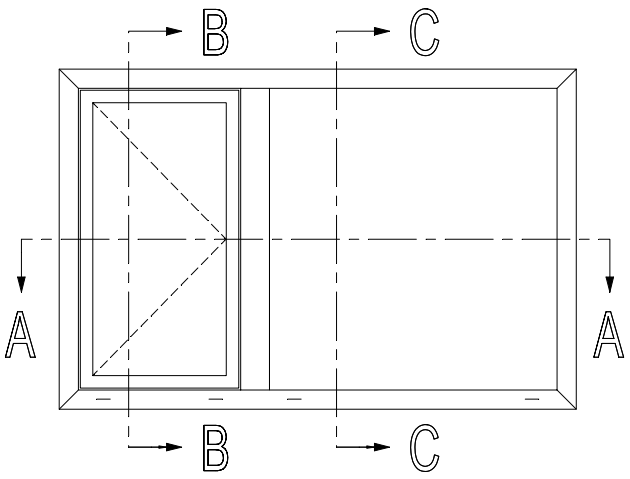

		#
060.8723.--		8
068.7850.00		4
068.7851.00		4
069.6565.04		8
068.7958.00		4
068.7859.00		4
068.8730.00		2
060.9118.--		15D.G....
060.9052.XX		15E.F....
060.6067.XX		1
060.6149.01		1
061.7642.--		3
069.6831.XX		089.M12A.F...
080.8442.04		(2xB1) + (2xH)
080.9650.04		(2xB1) + (2xH)
080.9478.04		4
080.9114.SY		(2xb1) + (2xh1)
		(2xb2) + (2xh2)
080.9124.SY		(2xb1) + (2xh1)
		(2xb2) + (2xh2)
068.6355.--		089.M12A.F...
068.6356.--		089.M12A.F...
052.5320.--		089.M12A.F...
084.9027.04		(2xB1)+(2xH)
084.9030.04		(2xB2)+(2xH)
084.9031.04		(6xB1)+(6xH)
084.9032.04		(2xB2)+(2xH)
084.9016.--		089.M12A.F...
084.9015.--		089.M12A.F...

b1 = B1 - 132
h1 = H - 140
b2 = B2 - 51
h2 = H - 64

E

schaal - échelle
scale - Maßstab
1/2

D0080793

CS 68-FP
EW 30

SAMENGESTELD RAAM NAAR BINNENDRAAIEND
CHASSIS COMPOSEE OUVRANT VERS L'INTERIEUR
COMBINED WINDOW INWARD OPENING
FENSTER MIT FESTEN PFOSTEN NACH INNEN OEFFNEND

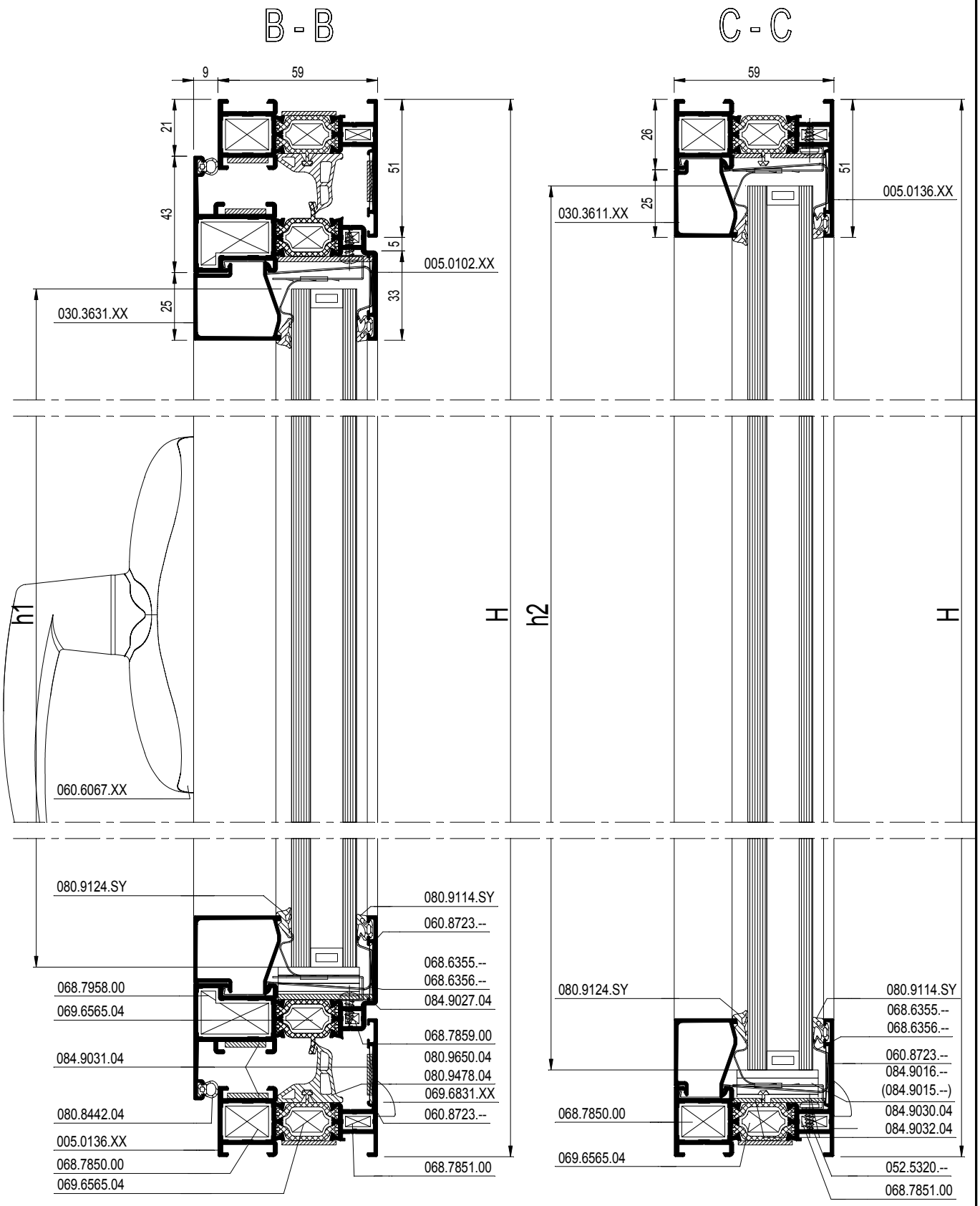

schaal - échelle
scale - Maßstab
1/2

D0080793

E

SAMENGESTELD RAAM TOP HUNG BINNENBEGLAZING
FENETRE COMPOSEE TOP HUNG VITRAGE INTERIEUR
COMPOSITE WINDOW TOP HUNG INSIDE GLAZED
FENSTER MIT FESTEM PFOSTEN TOP HUNG INNENVERGLASUNG

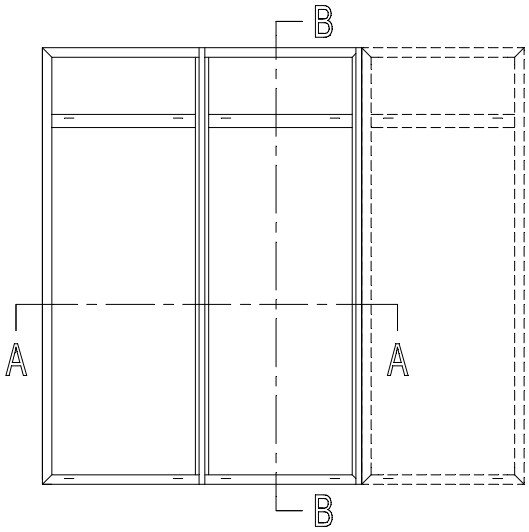

			#	Lm
005.0183.XX			2	B
			2	H
005.1100.XX			1	H
005.0120.XX			1	B1 - 58,5
			1	B2 - 58,5
030.1096.XX			1	H
030.3097.XX			1	H
030.0138.XX			1	H
030.0139.XX			1	H
030.3648.XX			4	B1 - 58,5
			4	H1 - 108,5
			4	B2 - 58,5
			4	H2 - 108,5

b1 = B1 - 70,5
h1 = H1 - 70,5
b2 = B2 - 70,5
h2 = H2 - 70,5

A - A

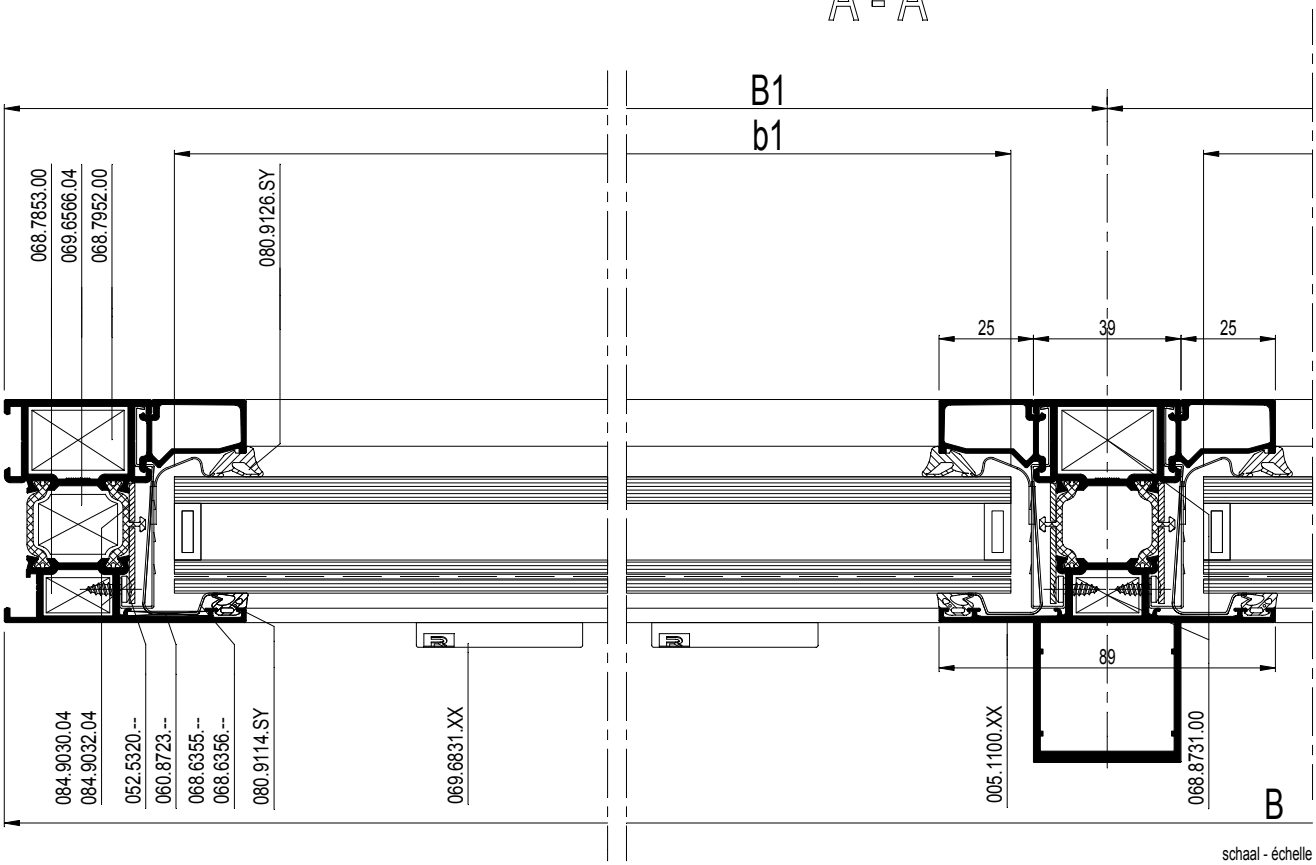

schaal - échelle
scale - Maßstab
1/2

D0081023

E

CS 68-FP
EW 30

SAMENGESTELD RAAM TOP HUNG BINNENBEGLAZING
FENETRE COMPOSEE TOP HUNG VITRAGE INTERIEUR
COMPOSITE WINDOW TOP HUNG INSIDE GLAZED
FENSTER MIT FESTEM PFOSTEN TOP HUNG INNENVERGLASUNG

		#
060.8723.--		4
068.7952.00		4
068.7853.00		4
069.6566.04		4
068.8731.00		6
069.6831.XX		089.M12A.F...
080.9114.SY		(2xb1) + (2xh1)
		(2xb2) + (2xh1)
		(2xb1) + (2xh2)
		(2xb2) + (2xh2)
080.9126.SY		(2xb1) + (2xh1)
		(2xb2) + (2xh1)
		(2xb1) + (2xh2)
		(2xb2) + (2xh2)
080.9381.04		(2xH)
068.6355.--		089.M12A.F...
068.6356.--		089.M12A.F...
052.5320.--		089.M12A.F...
052.5360.--		1/300mm
084.9030.04		(4xB)+(4xH)
084.9032.04		(4xB)+(4xH)
084.9016.--		089.M12A.F...
084.9015.--		089.M12A.F...

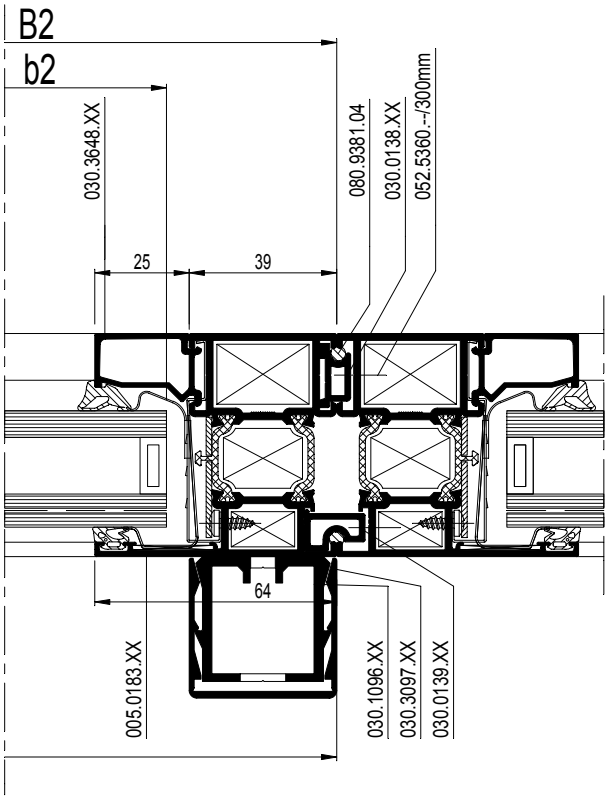

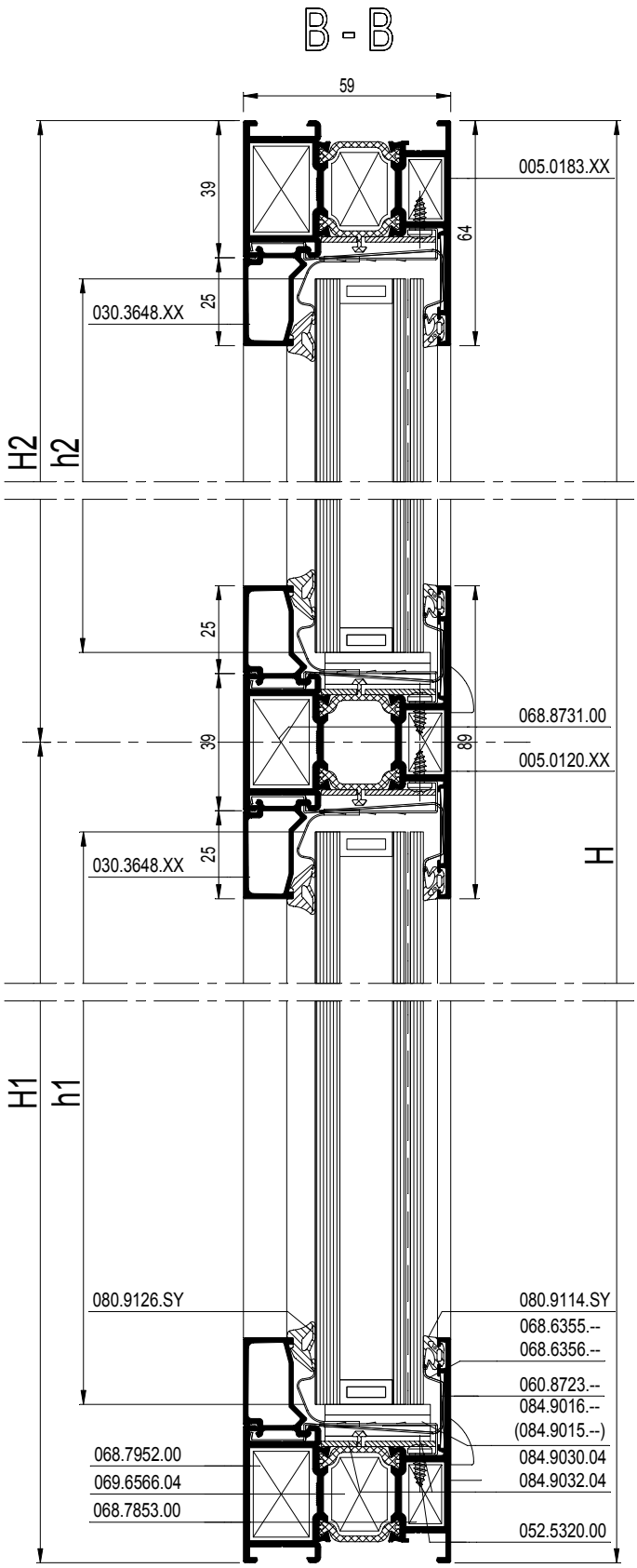

schaal - échelle
scale - Maßstab
1/2

D0081023

E

CS 68-FP
EW 30

SAMENGESTELDE DEUR BUITENDRAAIEND MET DUB. AANSLAGD.
PORTE COMPOSEE AVEC D. JOINT DE BUTTEE OUVR. V. L'INT.
COMBINED DOOR OUTWARD OPENING WITH DOUB. WEATHER ST.
KOMBINIERTE TUER AUSSEN OEFFN. MIT DOPPELANSCHLAGD.

Reynaers Aluminium

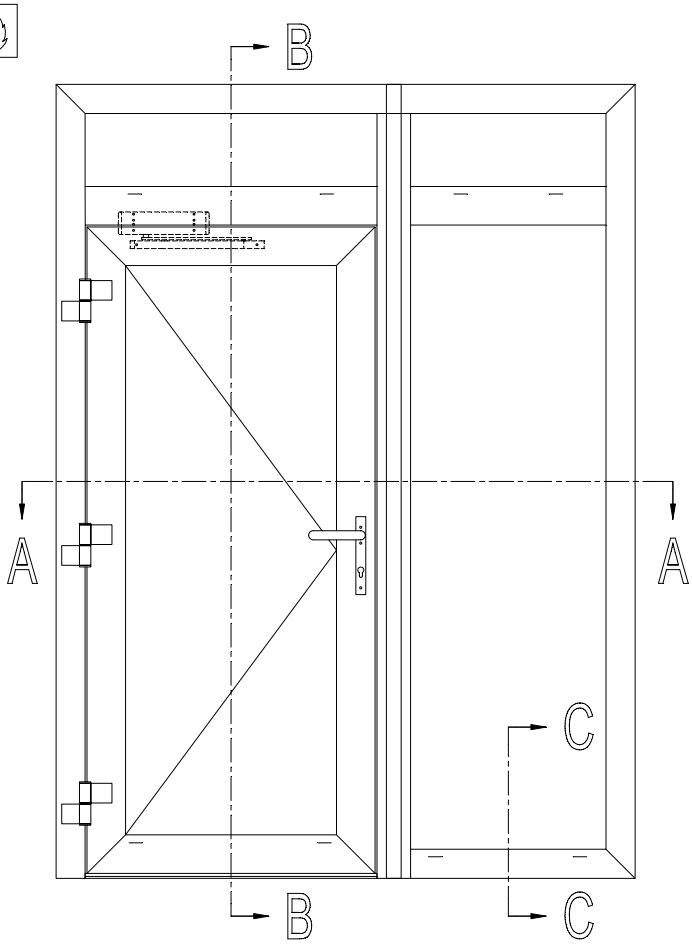

b1 = B1 - 286,5
h1 = H1 - 226,5
b2 = B2 - 70,5
h2 = H1 - 70,5
b3 = B1 - 70,5
h3 = H3 - 70,5

A - A

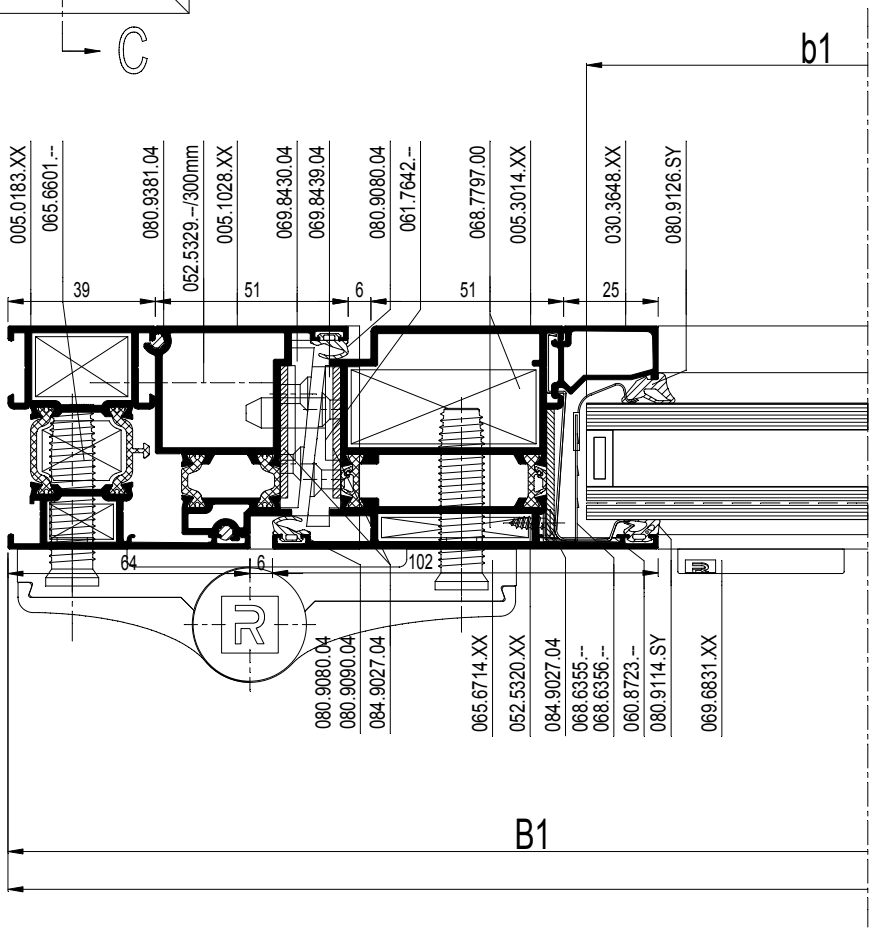

schaal - échelle
scale - Maßstab
1/2

D0081154

E

CS 68-FP
EW 30

SAMENGESTELDE DEUR BUITENDRAAIEND MET DUB. AANSLAGD.
PORTE COMPOSEE AVEC D. JOINT DE BUTTEE OUVR. V. L'INT.
COMBINED DOOR OUTWARD OPENING WITH DOUB. WEATHER ST.
KOMBINIERTE TUER AUSSEN OEFFN. MIT DOPPELANSCHLAGD.

Reynaers Aluminium

	#	Lm
005.0183.XX	1	H
	1	H
	1	B
	1	B2 - 19,5
005.3014.XX	2	B1 - 120,5
	2	H1 - 60,5
005.1028.XX	1	H1 - 16,5
	1	H1 - 16,5
	1	B1 - 52,5
005.0120.XX	1	B1 - 58,5
	1	B2 - 58,5
005.1100.XX	1	H
108.0081.XX	1	B1 - 162,5
005.0874.XX	1	B1 - 166,5

	#	Lm
030.3648.XX	2	B1 - 274,5
	2	H1 - 264,5
	2	B1 - 58,5
	4	H2 - 108,5
	4	B2 - 58,5
	2	H1 - 108,5

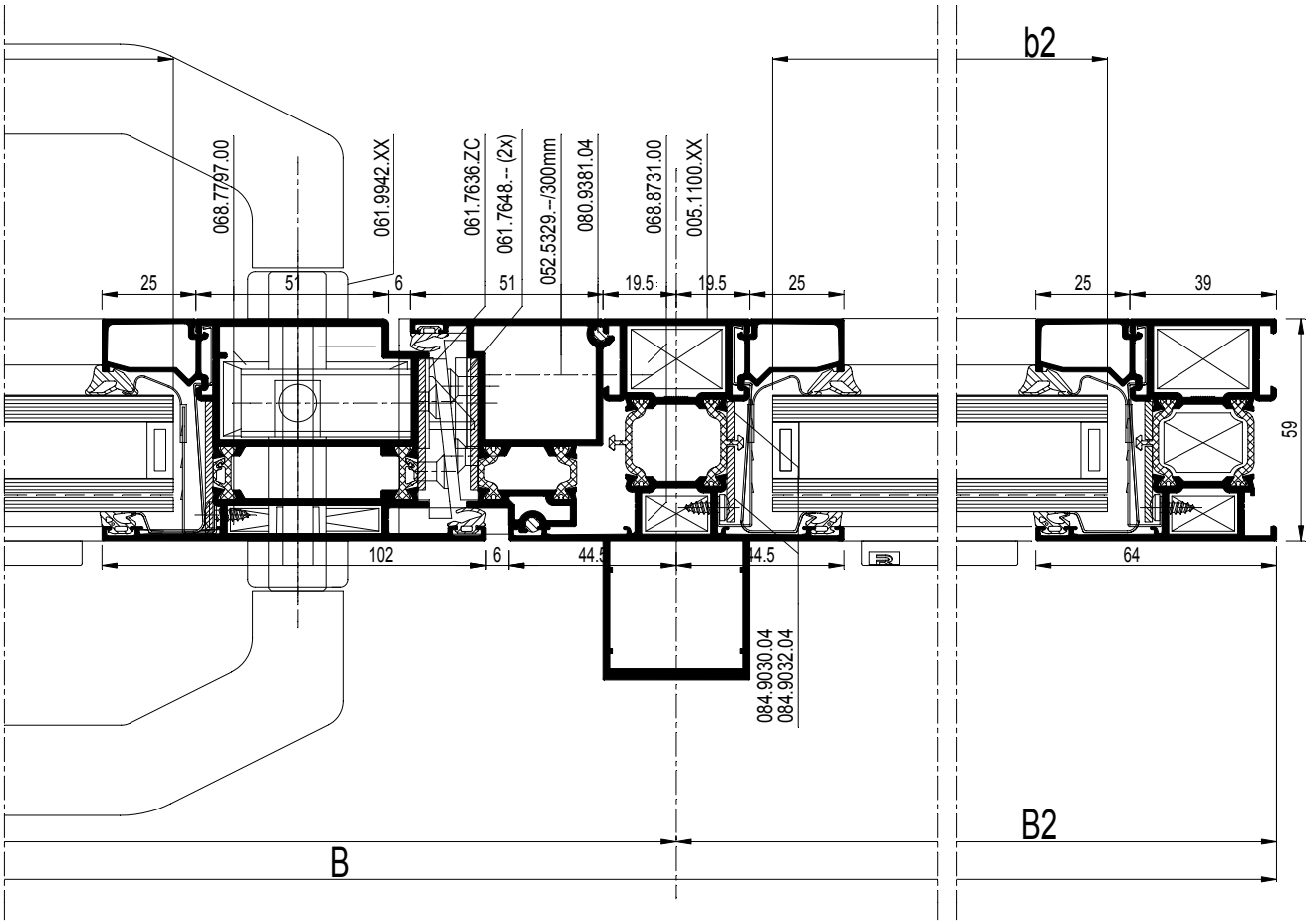

schaal - échelle
scale - Maßstab
1/2

D0081154

E

CS 68-FP
EW 30

SAMENGESTELDE DEUR BUITENDRAAIEND MET DUB. AANSLAGD.
PORTE COMPOSEE AVEC D. JOINT DE BUTTEE OUVR. V. L'INT.
COMBINED DOOR OUTWARD OPENING WITH DOUB. WEATHER ST.
KOMBINIERTE TUER AUSSEN OEFFN. MIT DOPPELANSCHLAGD.

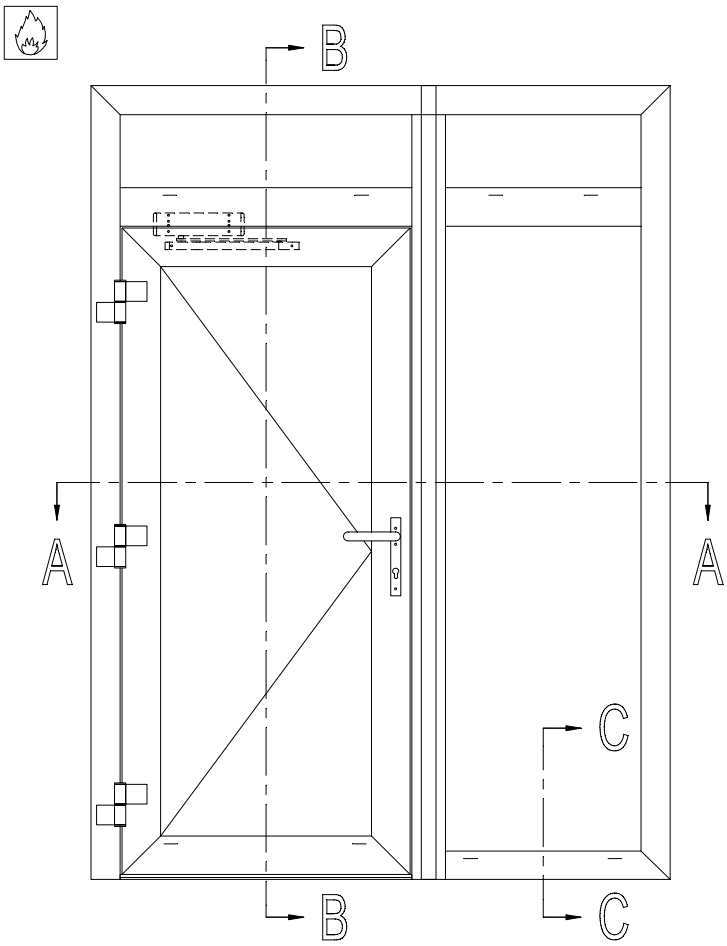

		#
068.6355.--		089.M12A.F...
068.6356.--		089.M12A.F...
052.5320.--		089.M12A.F...
052.5327.--		1/300mm
052.5329.--		1/300mm
084.9025.04		(1xB1)
084.9027.04		(4xB1)+(6xH1)
084.9030.04		(2xB1)+(4xH3)
		(4xB2)+(2xH1)
084.9032.04		(4xB1)+(4xH3)
		(4xB2)+(4xH1)
084.9016.--		089.M12A.F...

		#
068.7952.00		3
068.7853.00		3
068.7797.00		3
068.8807.00		1
060.8723.--		7
068.8731.00		6
065.6714.XX		15E.F...
065.6601.--		15E.F...
061.7636.ZC		1
052.5316.--		2
061.7648.--		2
052.5316.--		2
061.6416.--		1
052.5316.--		4
061.7642.--		3
052.5316.--		12
061.7643.--		1
061.9942.XX		1
061.8753.--		1
065.7581.14		1
069.6831.XX		089.M12A.F...
069.8430.04		1
052.5311.--		4
069.8439.04		1
052.5311.--		4
080.9381.04		2x B1
		4x H1
080.9080.04		3B1 + 4H1
080.9090.04		4
080.9440.04		1x B1
080.9320.04		1x B1
080.9114.SY		(2xb1)+(2xh1)
		(2xb2)+(2xh1)
		(2xb3)+(2xh2)
		(2xb2)+(2xh2)
080.9126.SY		(2xb1)+(2xh1)
		(2xb2)+(2xh1)
		(2xb3)+(2xh2)
		(2xb2)+(2xh2)

E

schaal - échelle
scale - Maßstab
1/2

D0081169

CS 68-FP
EW 30

SAMENGESTELDE DEUR BUITENDRAAIEND MET DUB. AANSLAGD.
PORTE COMPOSEE AVEC D. JOINT DE BUTTEE OUVR. V. L'INT.
COMBINED DOOR OUTWARD OPENING WITH DOUB. WEATHER ST.
KOMBINIERTE TUER AUSSEN OEFFN. MIT DOPPELANSCHLAGD.

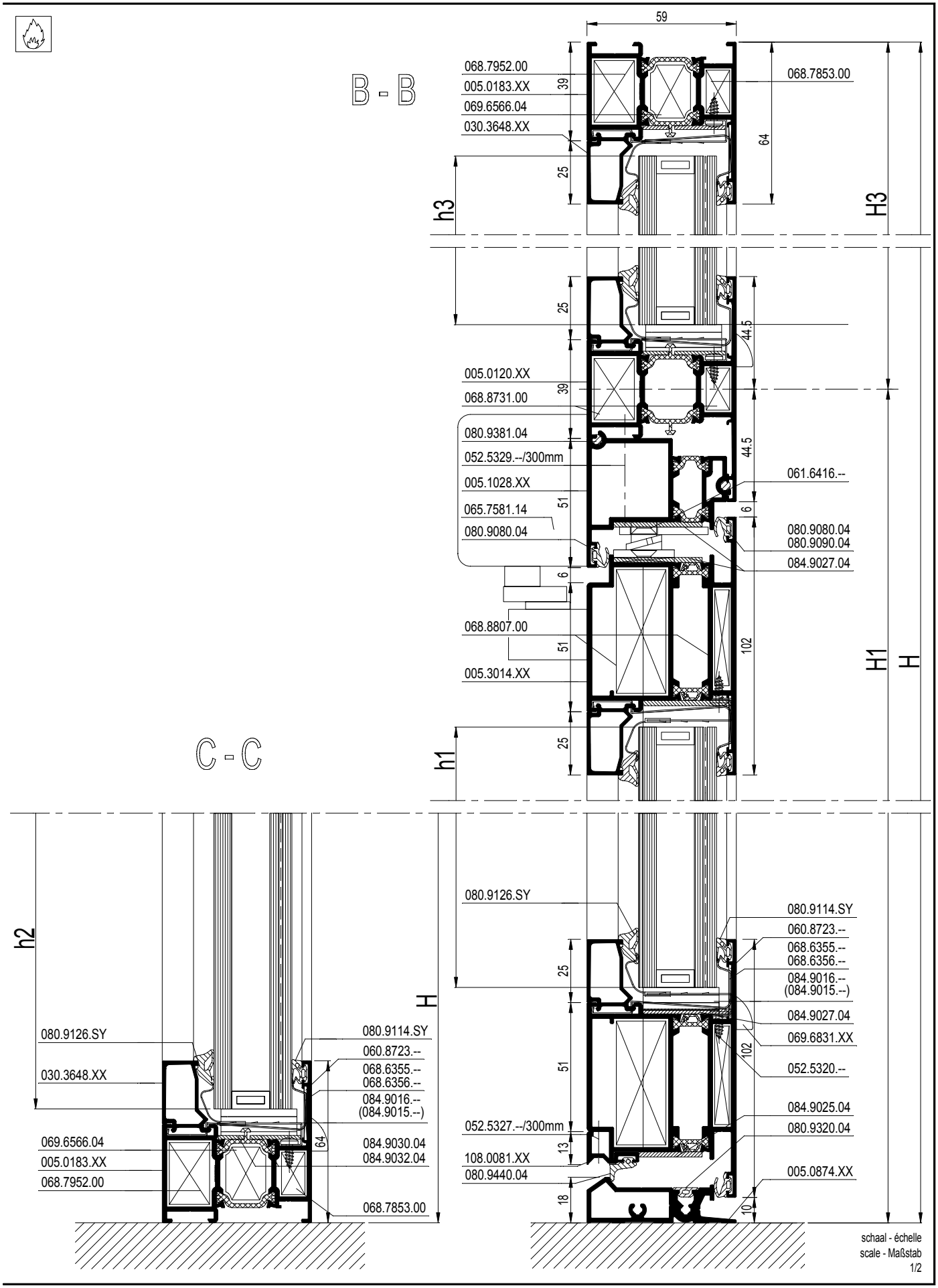

E

CS 68-FP
EW 30

DEUR BUITENDRAAIEND MET AUTOMATISCHE DEURDICHTING
PORTE OUVR. VERS L'EXT. AVEC FERM. DE PORTE AUTOM.
DOOR OUTWARD OPENING WITH AUTOMATIC DRAUGHT EXCLUDER
TUER NACH AUSS. OEFFNEND MIT AUTOM. DICHTUNG

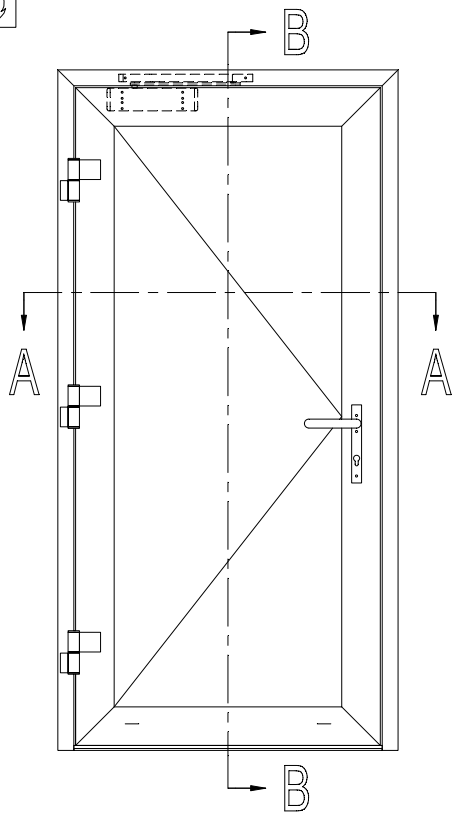

		#	Lm
005.1869.XX		1	B
		1	H
		1	H
005.3014.XX		2	B - 96
		2	H - 61
030.3648.XX		2	B - 250
		2	H - 265
108.0082.XX		1	B - 138
005.0071.XX		1	B - 118

b = B - 262
h = H - 227

A - A

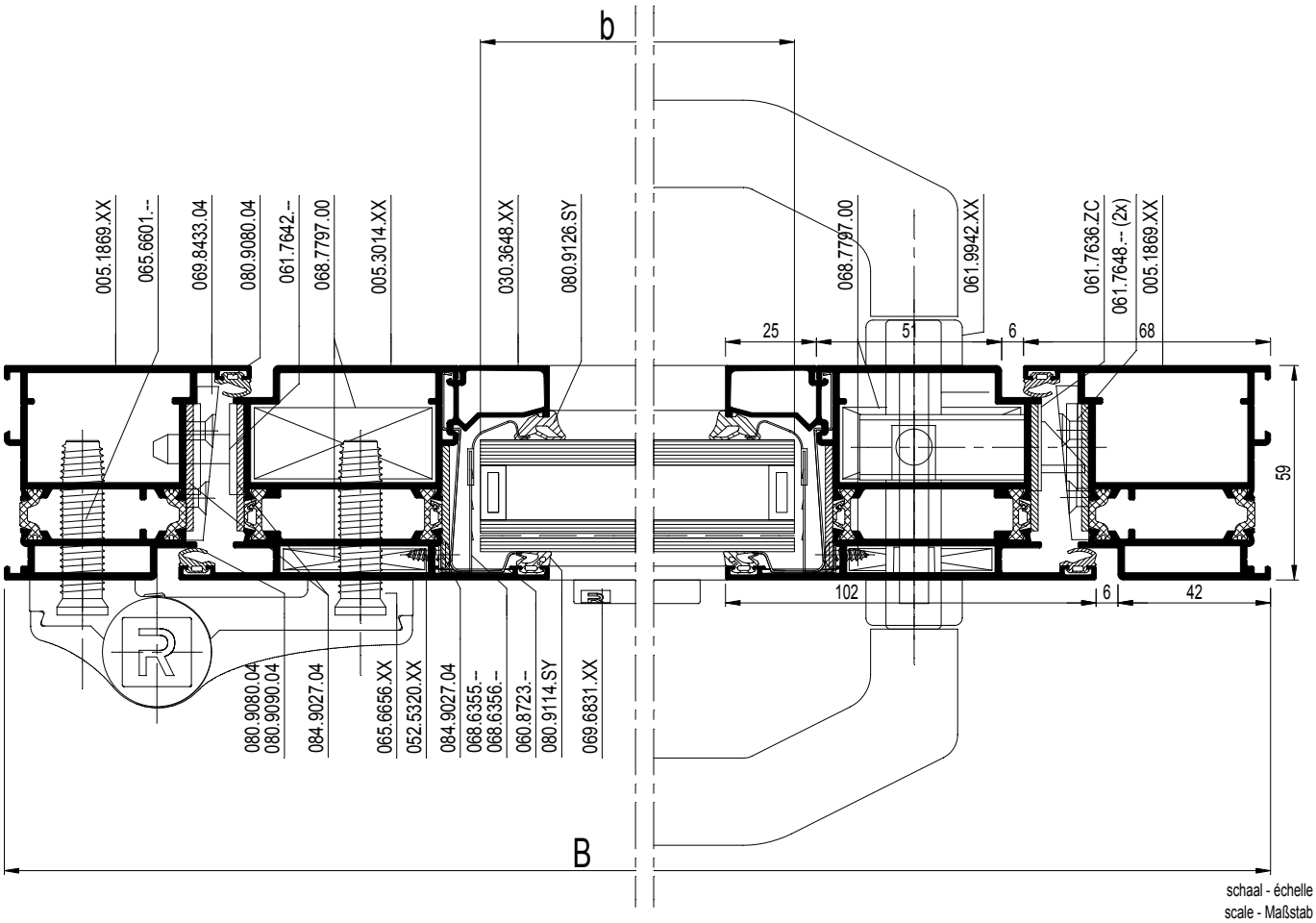

schaal - échelle
scale - Maßstab
1/2

D0081186

E

CS 68-FP
EW 30

DEUR BUITENDRAAIEND MET AUTOMATISCHE DEURDICHTING
PORTE OUVR. VERS L'EXT. AVEC FERM. DE PORTE AUTOM.
DOOR OUTWARD OPENING WITH AUTOMATIC DRAUGHT EXCLUDER
TUER NACH AUSS. OEFFNEND MIT AUTOM. DICHTUNG

		#
068.7794.00		2
068.7797.00		3
068.8807.00		1
060.8723.--		4
065.6656.XX		15E.F...
065.6601.--		15E.F...
061.7636.ZC		1
052.5316.--		2
061.----.--		1
061.7648.--		2
052.5316.--		2
061.6416.--		1
052.5316.--		4
061.7642.--		3
052.5316.--		12
061.7643.--		1
061.9942.XX		1
061.8753.--		1
065.7581.14		1
069.6831.XX		089.M12A.F...
069.8433.04		1
052.5311.--		4
081.9040.--		089.M12A.F...
080.9080.04		(2xB)+(4xH)
080.9090.04		2
080.9114.SY		(2xb)+(2xh)
080.9126.SY		(2xb)+(2xh)
081.9092.04		12 x 47.5
052.5315.--		1/300mm
068.6355.--		089.M12A.F...
068.6356.--		089.M12A.F...
052.5320.--		089.M12A.F...
084.9027.04		(4xB)+(6xH)
084.9016.--		089.M12A.F...

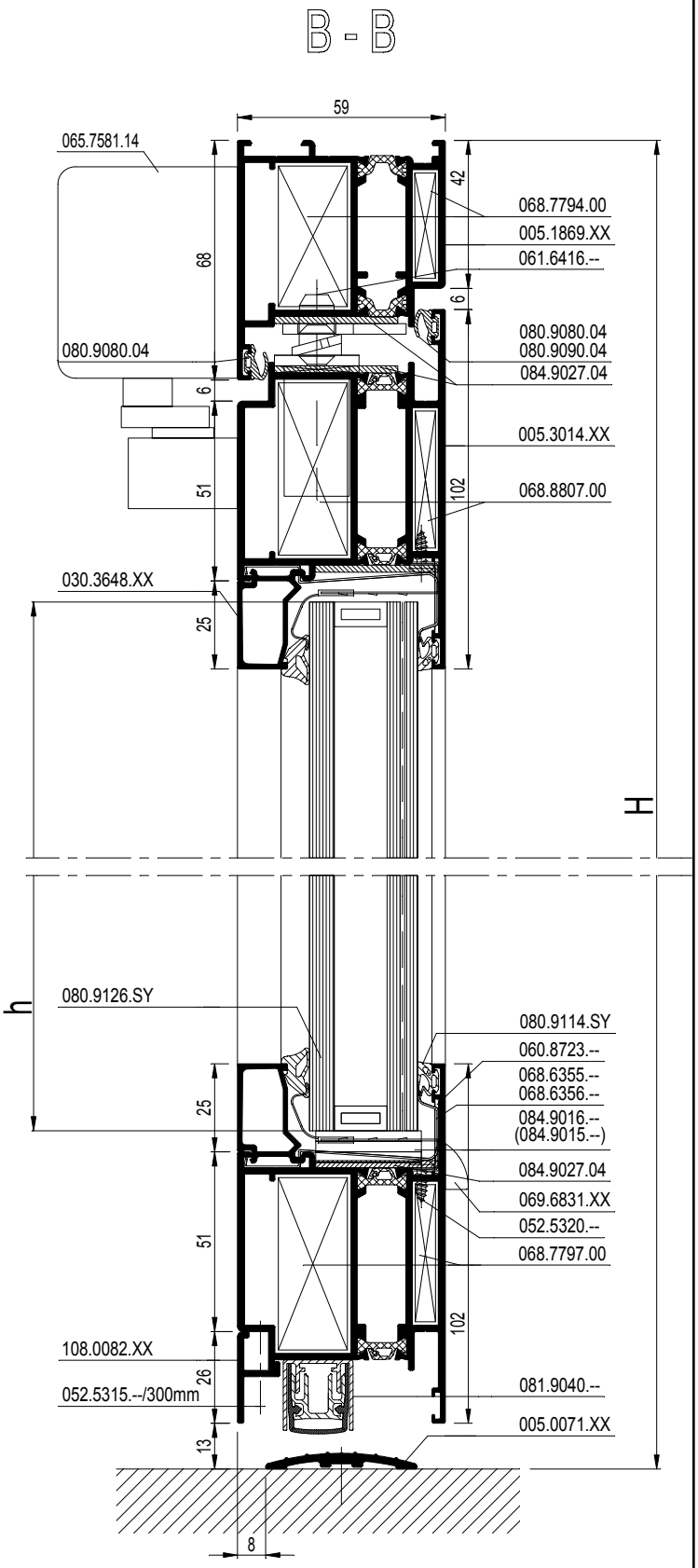

schaal - échelle
scale - Maßstab
1/2

D0081186

E

CS 68-FP
EW 30

RAAMDEUR NAAR BINNENDRAAIEND MET BORSTEL
PORTE-FENETRE OUVRANT VERS L'INT. AVEC BROSSE
WINDOW-DOOR INWARD OPENING WITH BRUSH
FENSTERTUER NACH INNEN OEFFNEND MIT BUERSTEN

Reynaers Aluminium

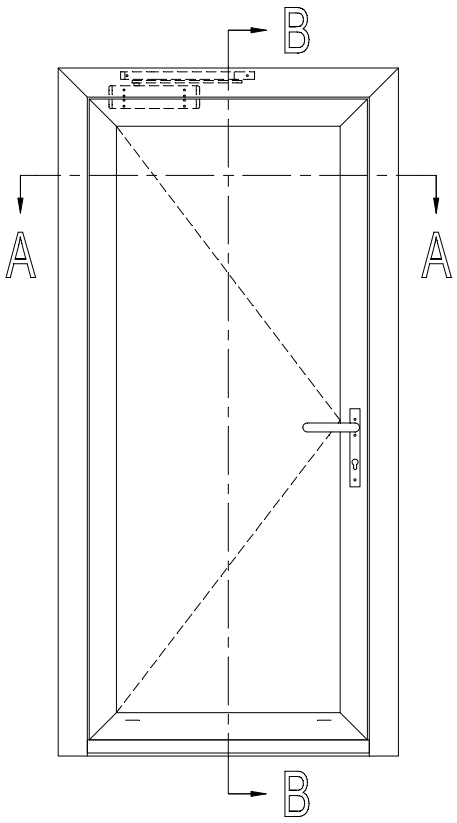

			#	Lm
005.0125.XX			1	B
			1	H
			1	H
005.0121.XX			2	B - 94
			2	H - 55
030.3668.XX			2	B - 258
			2	H - 269
005.0049.XX			1	B - 156

b = B - 270
h = H - 231

A - A

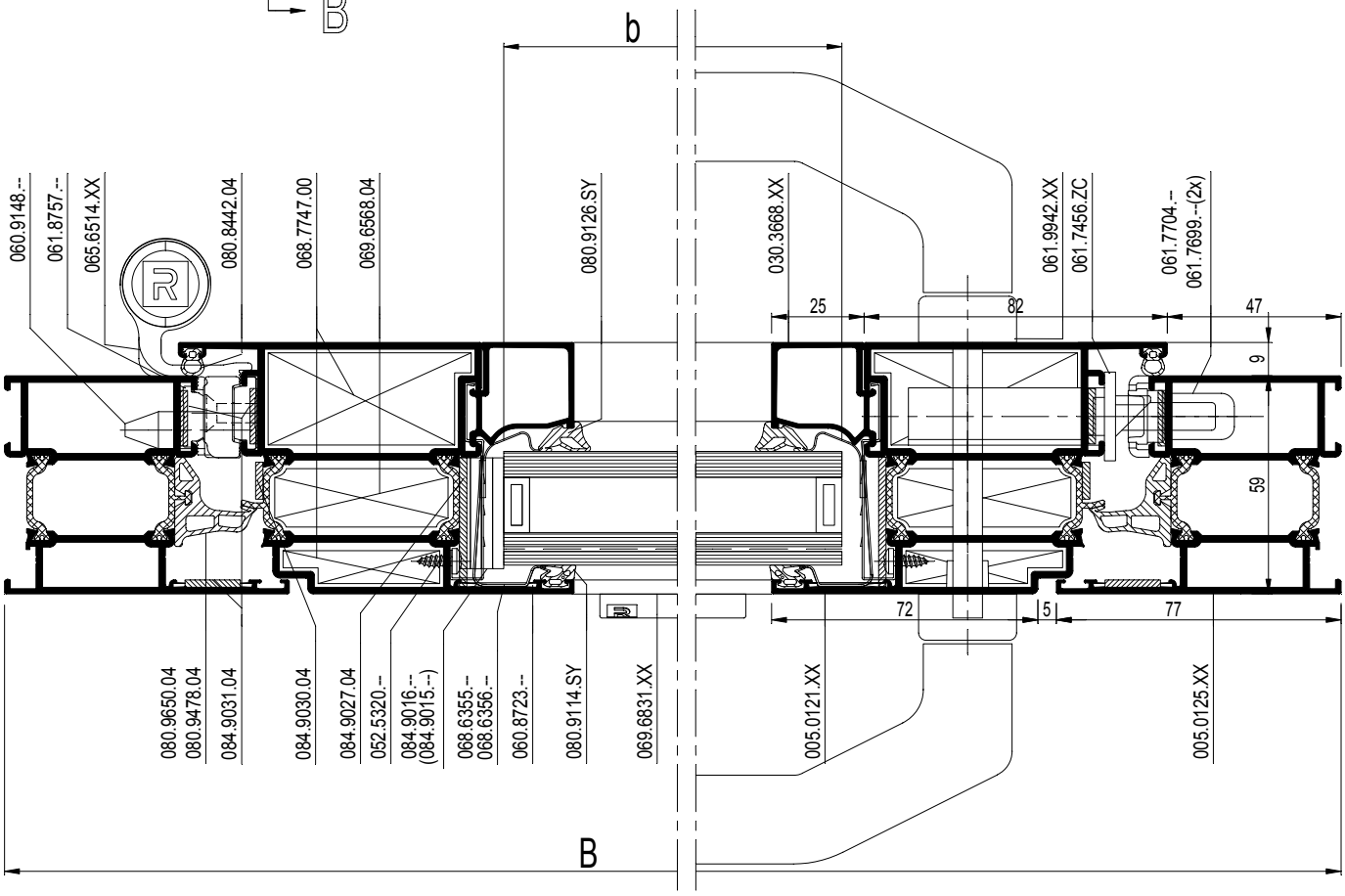

schaal - échelle
scale - Maßstab
1/2

D0081195

E

CS 68-FP
EW 30

RAAMDEUR NAAR BINNENDRAAIEND MET BORSTEL
PORTE-FENETRE OUVRANT VERS L'INT. AVEC BROSSE
WINDOW-DOOR INWARD OPENING WITH BRUSH
FENSTERTUER NACH INNEN OEFFNEND MIT BUERSTEN

		#
060.8723.--		6
068.7854.00		2
068.7855.00		2
069.6567.04		2
068.7747.00		4
069.6568.04		4
065.6514.XX		15E.F...
061.9942.XX		1
061.8754.--		1
061.7456.ZC		1
050.5011.--		9
057.5711.--		9
061.7704.--		1
050.5011.--		3
057.5711.--		3
061.7699.--		2
050.5011.--		4
057.5711.--		4
061.----.--		1
060.9148.--		3
061.8757.--		3
060.6147.--		6
053.5412.--		6
061.6455.--		2
052.5336.--		4
052.5331.--		4
052.5310.--		1/300mm
065.7581.14		1
069.6831.XX		089.M12A.F...
081.9142.04		B - 136
080.8442.04		(1xB) + (2xH)
080.9650.04		(1xB) + (2xH)
080.9478.04		2
080.9114.SY		(2xb)+(2xh)
080.9126.SY		(2xb)+(2xh)
068.6355.--		089.M12A.F...
068.6356.--		089.M12A.F...
052.5320.--		089.M12A.F...
084.9010.04		1xB
084.9027.04		(2xB)+(2xH)
084.9030.04		(1xB)+(2xH)
084.9031.04		(3xB)+(6xH)
084.9016.--		089.M12A.F...

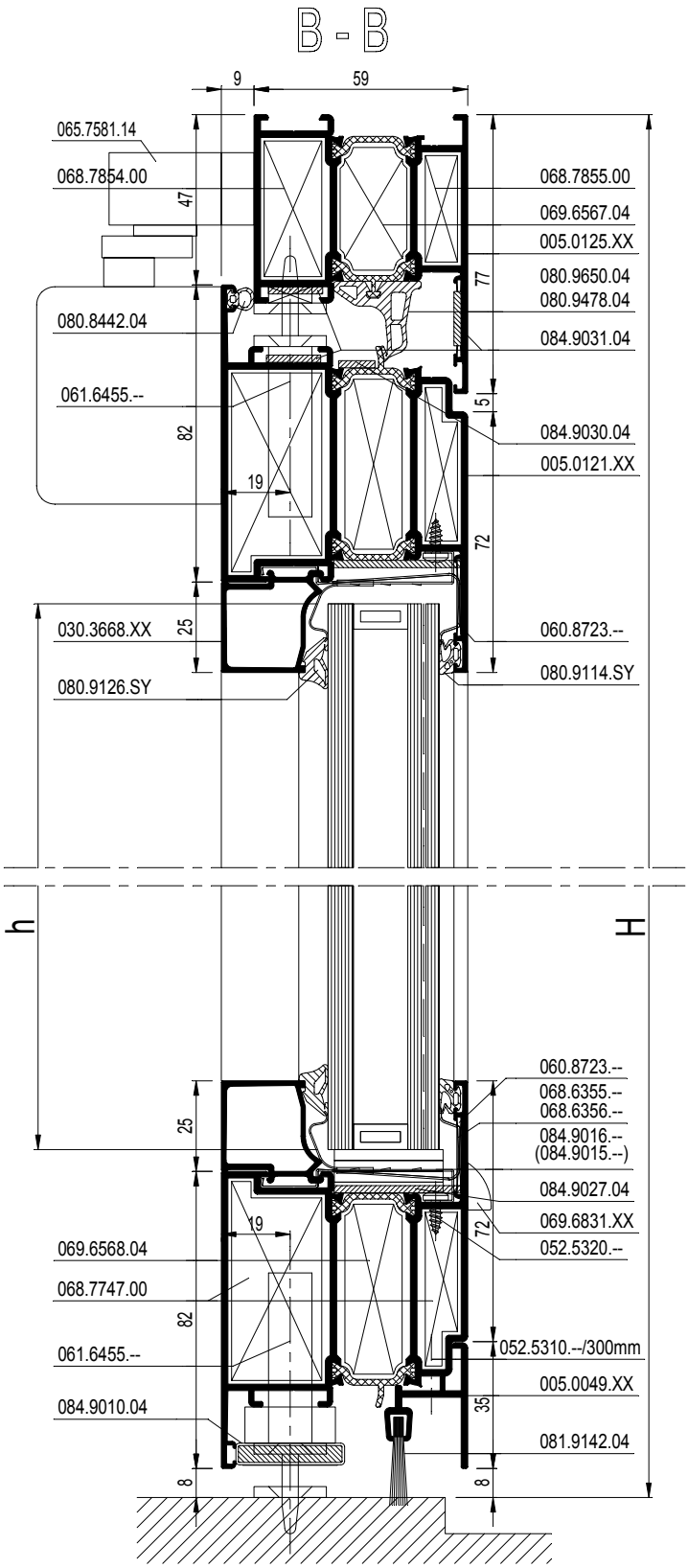

schaal - échelle
scale - Maßstab
1/2

D0081195

E

CS 68-FP
EW 30

AUTOMATISCHE DEURDICHTING
PLINTHE AUTOMATIQUE
AUTOMATIC DRAUGHT EXCLUDER
AUTOMATISCHER TUERDICHTUNG

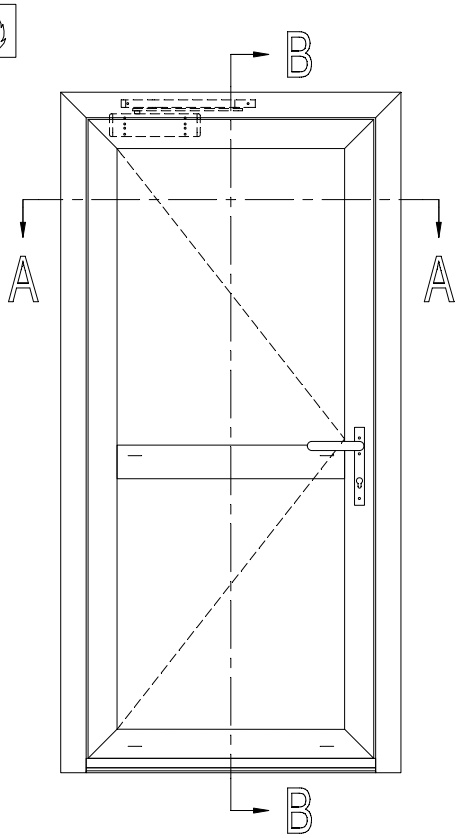

			#	Lm
005.1898.XX			1	B
			1	H
			1	H
005.3026.XX			2	B - 96
			2	H - 61
005.0120.XX			1	B - 250
030.3648.XX			4	B-250
			2	H1 - 159,5
			2	H2 - 194,5
108.0082.XX			1	B - 138
005.0071.XX			1	B - 118

b = B - 262
h1 = H1 - 121,5
h2 = H2 - 156,5

A - A

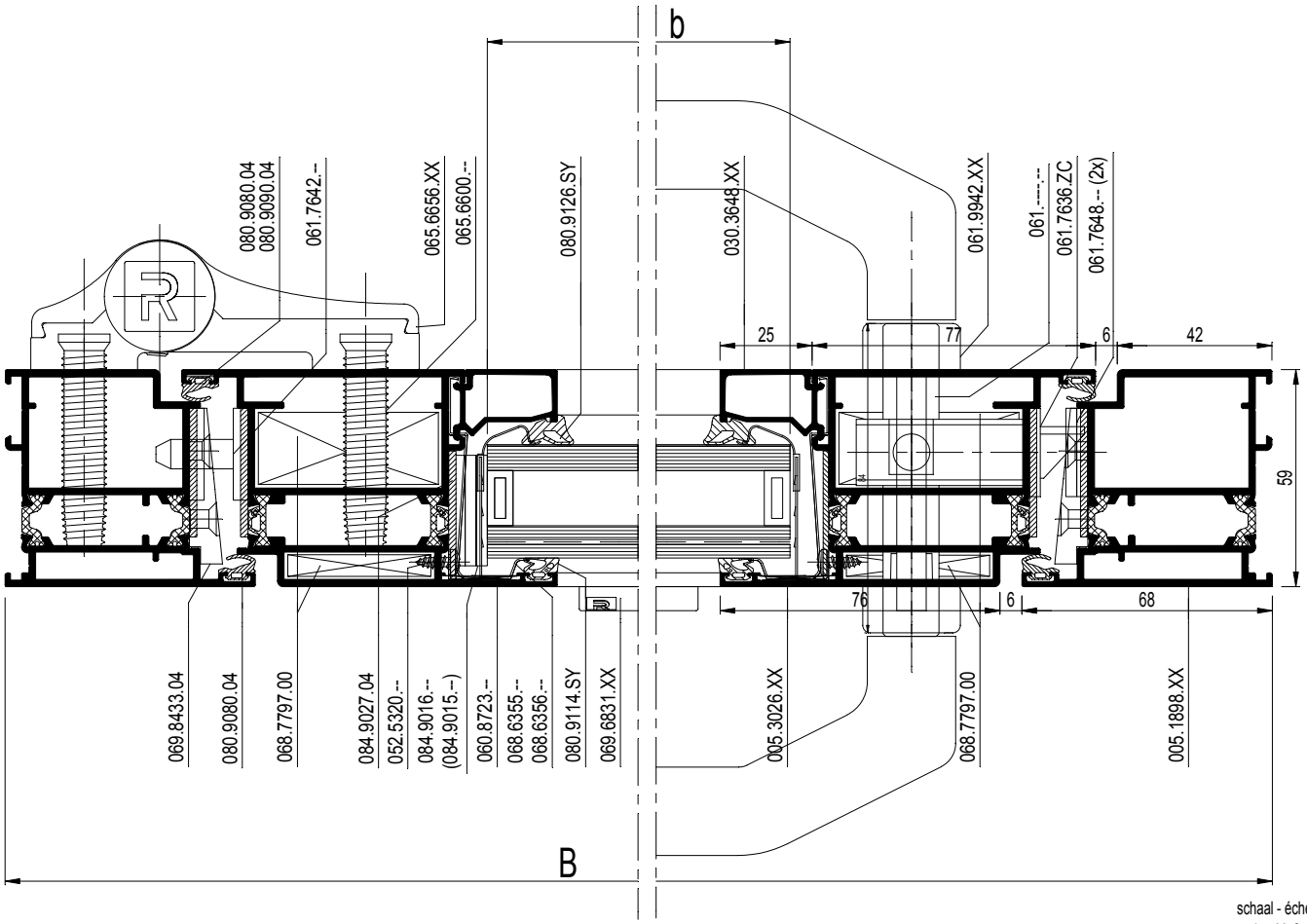

schaal - échelle
scale - Maßstab
1/2

D0081199

E

CS 68-FP
EW 30

AUTOMATISCHE DEURDICHTING
PLINTHE AUTOMATIQUE
AUTOMATIC DRAUGHT EXCLUDER
AUTOMATISCHER TUERDICHTUNG

		#
068.7794.00		2
068.7797.00		4
060.8723.--		4
068.8731.00		2
065.6656.XX		15E.F...
065.6600.--		15E.F...
061.7636.ZC	1	1
052.5316.--		2
061.7075.--		1
061.7648.--		2
052.5316.--		2
061.6416.--		1
052.5316.--		4
061.7642.--		3
052.5316.--		12
061.7643.--		1
061.9942.XX		1
061.8753.--		1
065.7581.14		1
069.6831.XX		089.M12A.F...
069.8433.04		1
052.5311.--		4
081.9040.--		089.M12A.F...
080.9080.04		(2xb)+(4xh)
080.9090.04		2
080.9114.SY		(2xb)+(2xh1)
		(2xb)+(2xh2)
080.9126.SY		(2xb)+(2xh1)
		(2xb)+(2xh2)
081.9092.04		8x47.5
052.5315.--		1/300mm
068.6355.--		089.M12A.F...
068.6356.--		089.M12A.F...
052.5320.--		089.M12A.F...
084.9027.04	F	(4xB)+(6xH)
084.9030.04	F	(2xB)
084.9032.04	F	(2xB)
084.9016.--	F	089.M12A.F...

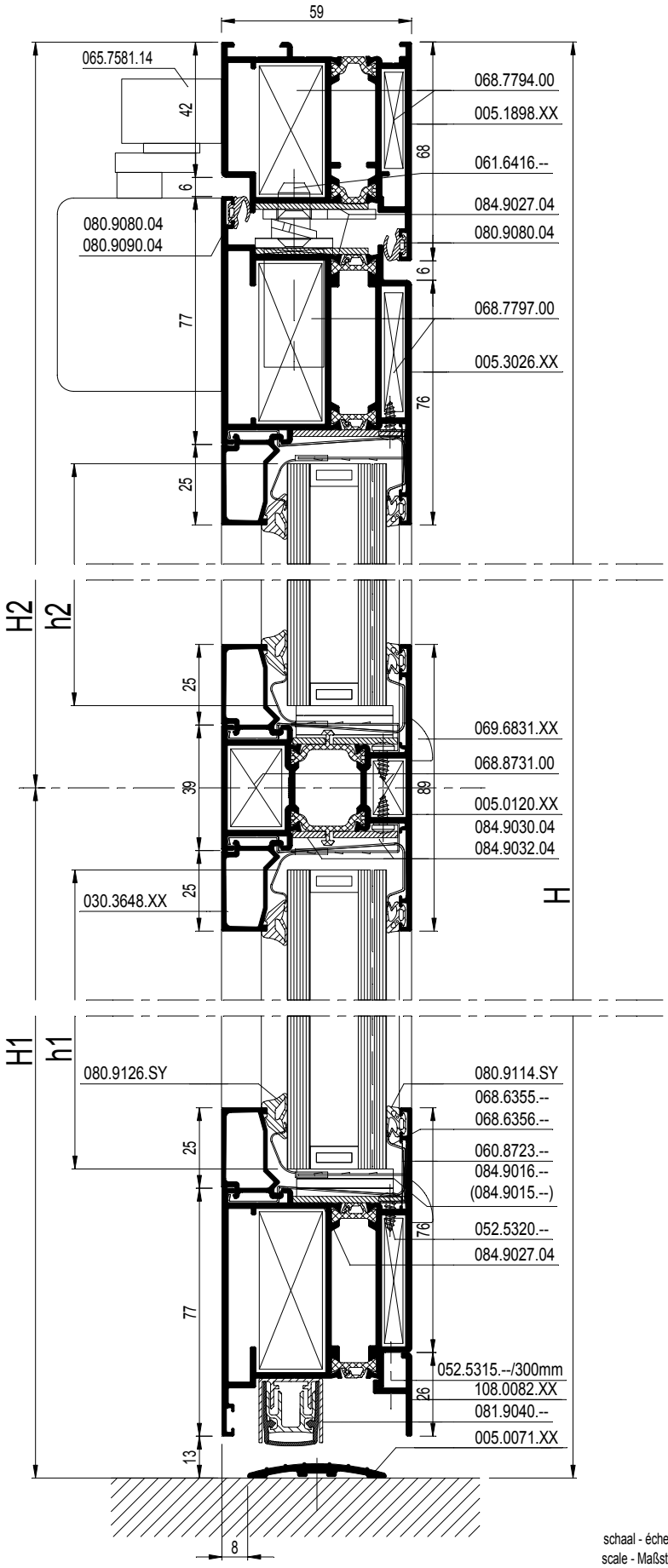

B - B

schaal - échelle
scale - Maßstab
1/2

D0081199

E

CS 68-FP
EW 30

RAAMDEUR NAAR BUITENDRAAIEND MET BORSTEL
PORTE-FENETRE OUVRANT VERS L'EXT. AVEC BROSSE
WINDOW-DOOR OUTWARD OPENING WITH BRUSH
FENSTERTUER NACH AUSSEN OEFFNEND MIT BUERSTEN

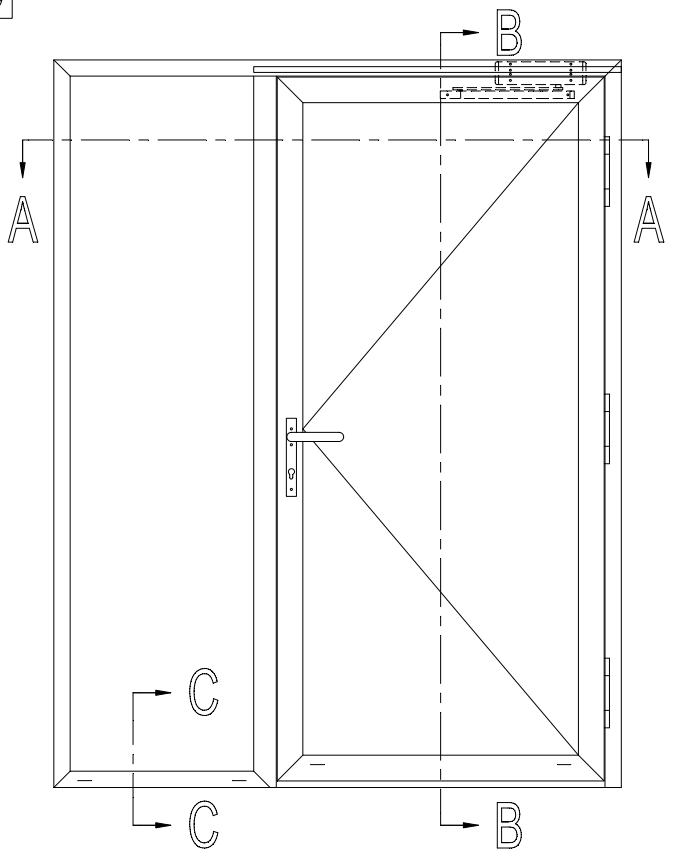

		#
060.8723.--		8
068.7952.00		4
068.7853.00		4
069.6566.04		4
068.7771.00		4
065.6515.XX		15E.F....
061.9942.XX		1
061.8754.--		1
061.7456.ZC		1
050.5011.--		9
057.5711.--		9
061.7704.--		1
050.5011.--		3
057.5711.--		3
061.7699.--		2
050.5011.--		4
057.5711.--		4
061.7025.--		1
061.6455.--		2
052.5336.--		4
052.5331.--		4
060.6148.--		3
061.8757.--		3
060.6147.--		6
053.5412.--		6
065.7581.14		1
052.5310.--		1/300mm
052.5312.--		1/300mm
052.5329.--		1/300mm
069.6831.XX		089.M12A.F...
081.9142.04		B - 140
080.8442.04		B2 + (2xH)
080.9445.04		B2 + (2xH)
080.9114.SY		(2xb1+2xh1)
		(2xb2+2xh2)
080.9128.SY		(2xb1+2xh1)
		(2xb2+2xh2)

		#
068.6365.--		089.M12A.F...
068.6361.--		089.M12A.F...
052.5309.--		089.M12A.F...
052.5320.--		089.M12A.F...
084.9010.04		B2
084.9027.04		(2xB2)+(2xH)
084.9030.04		(2xB1)+(2xH)
084.9031.04		(3xB2)+(6xH)
084.9032.04		(2xB1)+(1xB2)+(4xH)
084.9016.--		089.M12A.F...

E

schaal - échelle
scale - Maßstab
1/2

D0081210

CS 68-FP
EW 30

RAAMDEUR NAAR BUITENDRAAIEND MET BORSTEL
PORTE-FENETRE OUVRANT VERS L'EXT. AVEC BROSSE
WINDOW-DOOR OUTWARD OPENING WITH BRUSH
FENSTERTUER NACH AUSSEN OEFFNEND MIT BUERSTEN

Reynaers Aluminium

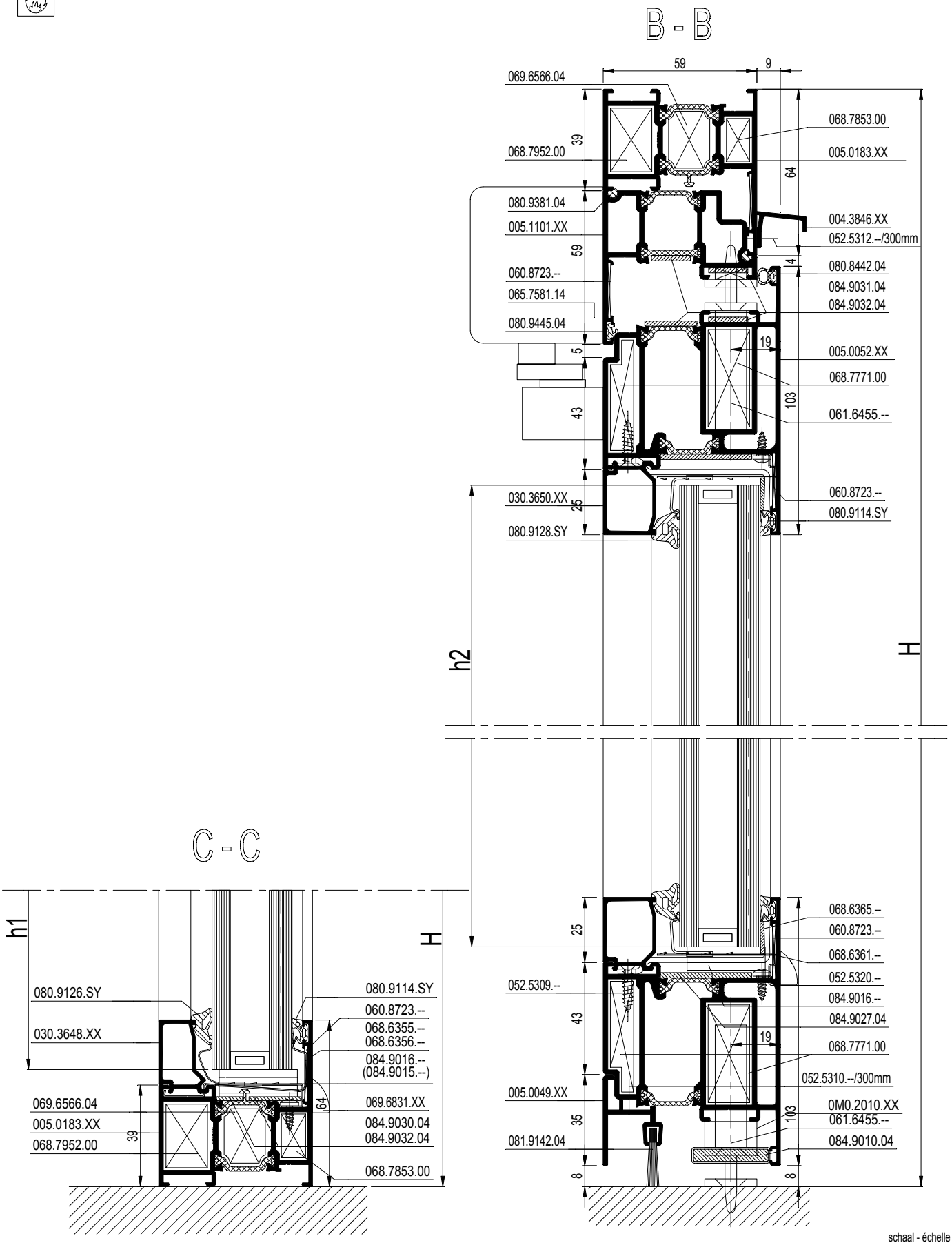

schaal - échelle
scale - Maßstab
1/2

D0081210

E

CS 68-FP
EW 30

RAAMDEUR NAAR BUITENDRAAIEND MET BORSTEL
PORTE-FENETRE OUVRANT VERS L'EXT. AVEC BROSSE
WINDOW-DOOR OUTWARD OPENING WITH BRUSH
FENSTERTUER NACH AUSSEN OEFFNEND MIT BUERSTEN

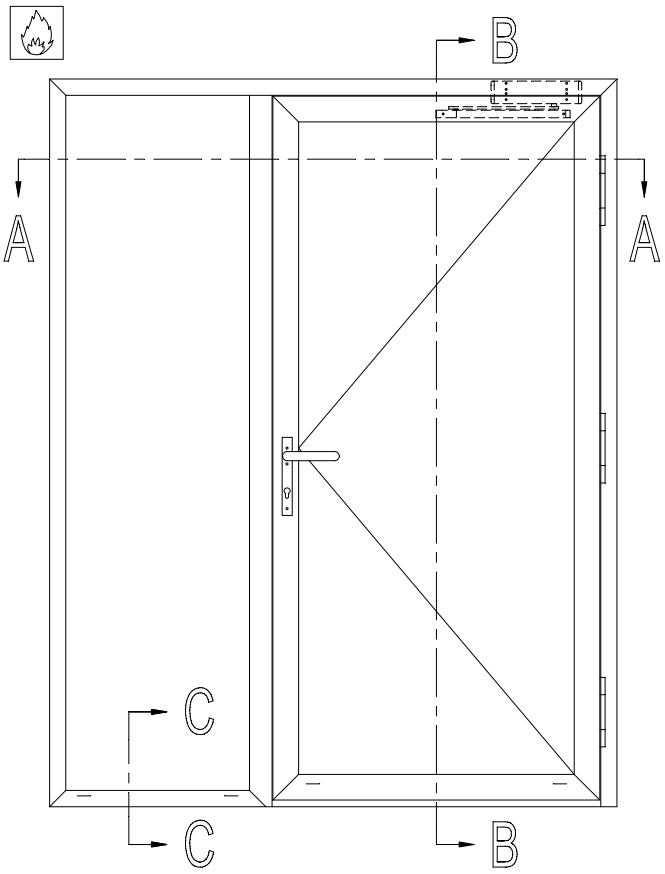

			#	Lm
005.0183.XX			1	B
			1	H
			1	H
			1	B1 + 19,5
005.1101.XX			1	B2 - 58,5
			1	H - 39
			1	H - 39
005.0052.XX			2	B2 - 116,5
			2	H - 76
005.0120.XX			1	H - 14
005.0049.XX			1	B - 178,5
030.3648.XX			2	B1 - 58,5
			2	H - 128
030.3650.XX			2	B2 - 272,5
			2	H - 282
004.3846.XX			1	B2 + 44,5

A - A

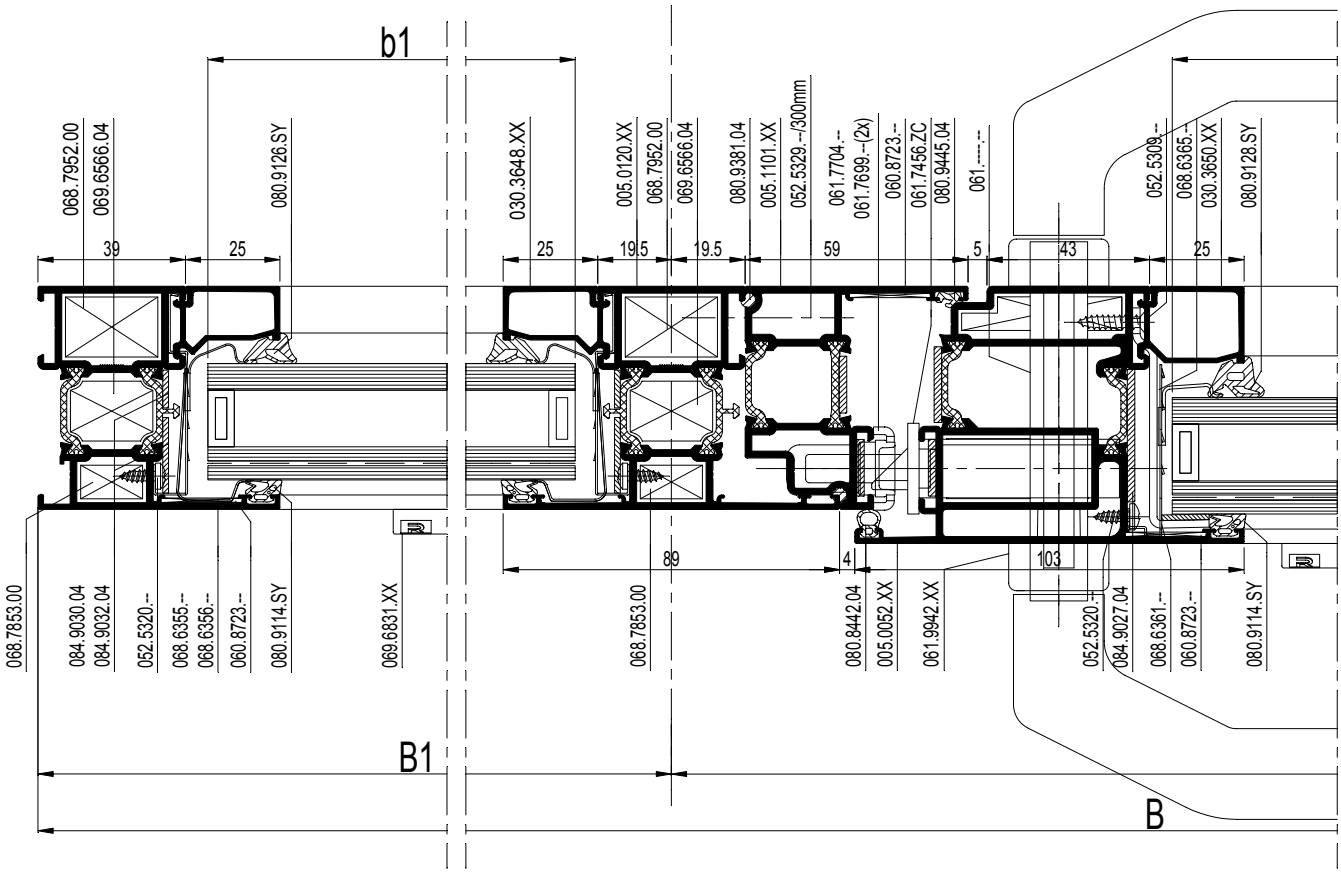

schaal - échelle
scale - Maßstab
1/2

D0081204

E

CS 68-FP
EW 30

RAAMDEUR NAAR BUITENDRAAIEND MET BORSTEL
PORTE-FENETRE OUVRANT VERS L'EXT. AVEC BROSSE
WINDOW-DOOR OUTWARD OPENING WITH BRUSH
FENSTERTUER NACH AUSSEN OEFFNEND MIT BUERSTEN

b1 = B1 - 70,5
h1 = H - 90
b2 = B2 - 284,5
h2 = H - 244

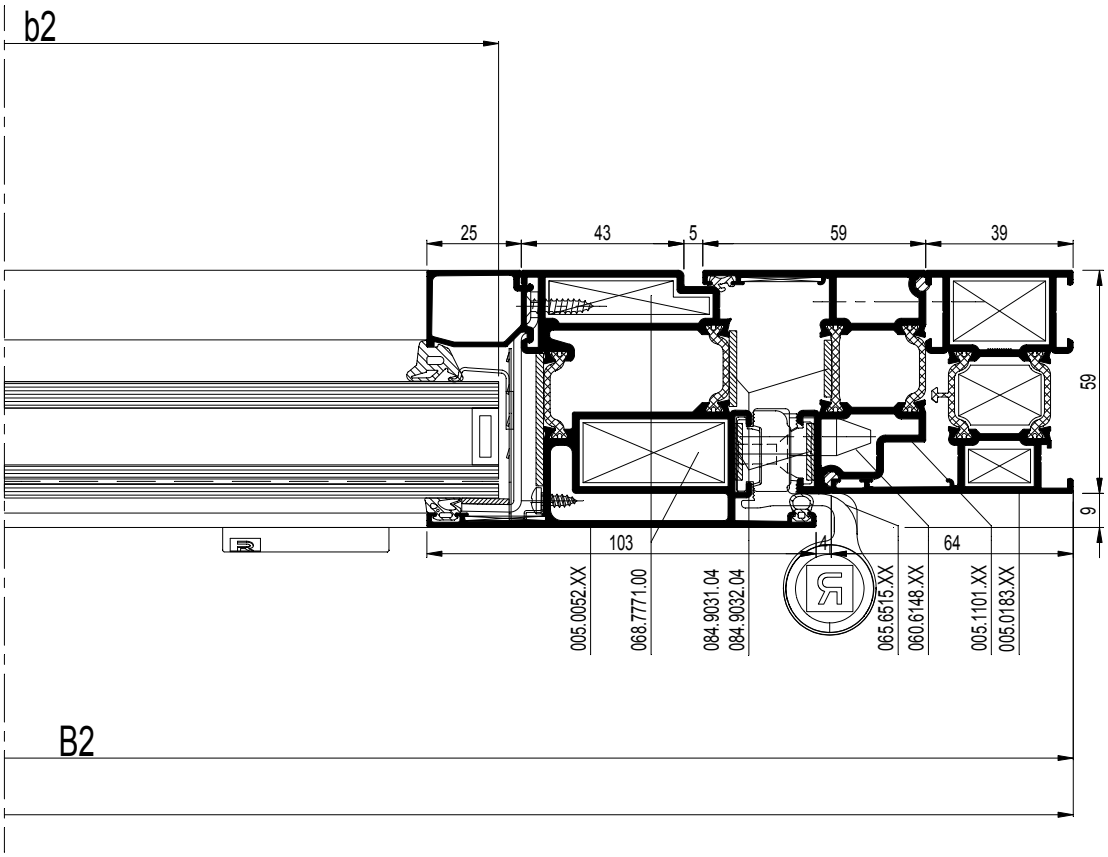

schaal - échelle
scale - Maßstab
1/2

D0081204

E

CS 68-FP
EW 30

Z-T DEUR BINNENDR. MET DUBBELE AANSLAGDICHTING
PORTE Z-T DOUBLE JOINT DE BUTEE OUVR. VERS L'INT.
Z-T DOOR INW. OPEN. WITH DOUBLE WEATHER STRIP
Z-T TUER IN. OEFFN. MIT DOPPELANSCHLAGDICHTUNG

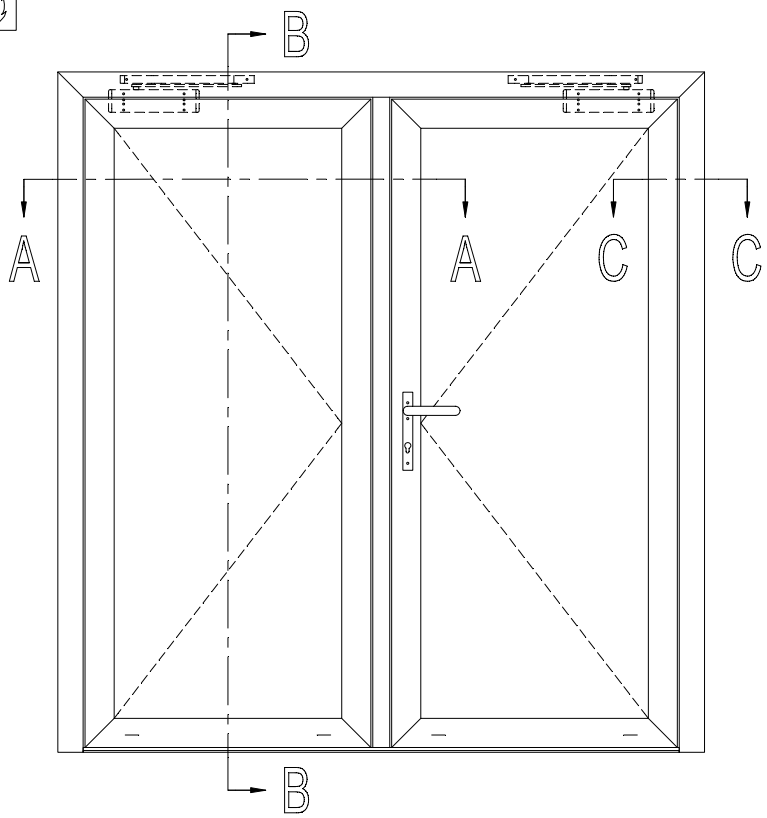

b1 = B1 - 217
b2 = B2 - 217
h = H - 224

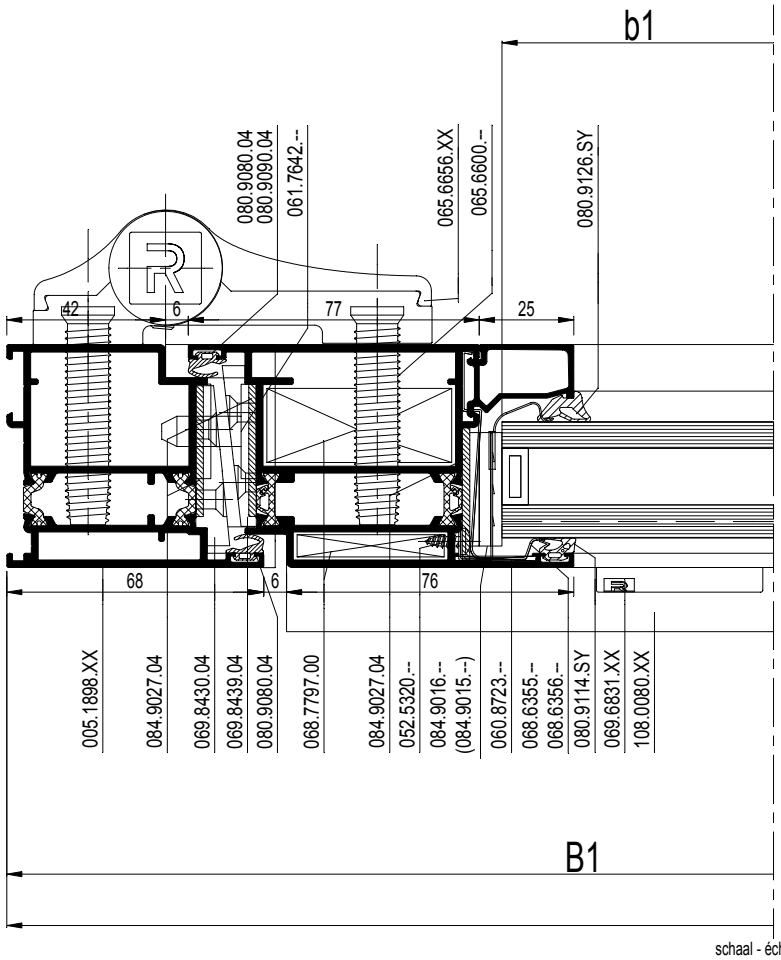

schaal - échelle
scale - Maßstab
1/2

D008/211

E

CS 68-FP
EW 30

Z-T DEUR BINNENDR. MET DUBBELE AANSLAGDICHTING
PORTE Z-T DOUBLE JOINT DE BUTEE OUVR. VERS L'INT.
Z-T DOOR INW. OPEN. WITH DOUBLE WEATHER STRIP
Z-T TUER IN. OEFFN. MIT DOPPELANSCHLAGDICHTUNG

		#	Lm
005.1898.XX		1	B
		1	H
		1	H
005.3026.XX		2	B1 - 51
		2	B2 - 51
		4	H - 58
005.2015.XX		1	H - 100
108.0080.XX		1	B1 - 51
		1	B2 - 103
005.0873.XX		1	B - 142
030.3648.XX		2	B1 - 205
		2	B2 - 205
		4	H - 262

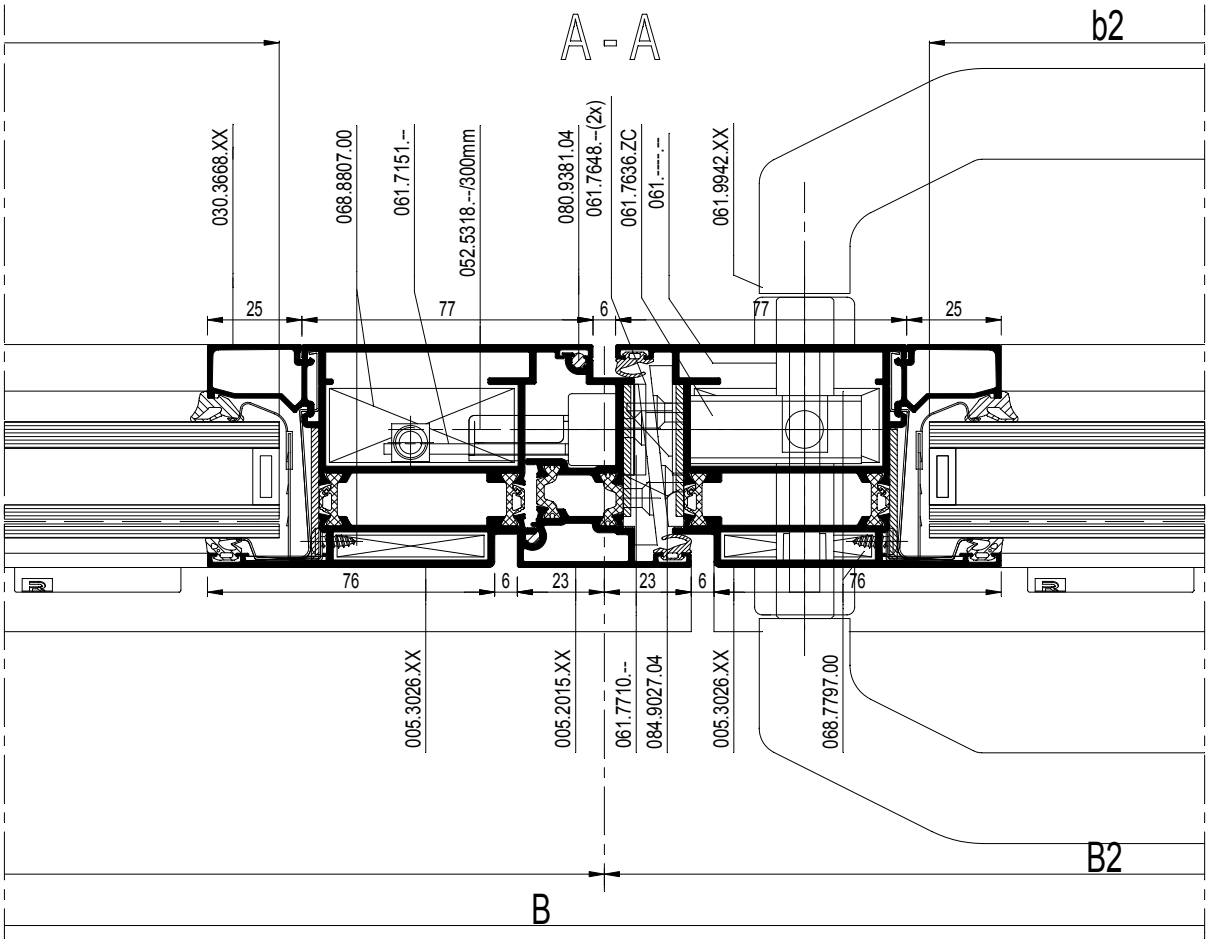

schaal - échelle
scale - Maßstab
1/2

D0081211

E

CS 68-FP
EW 30

Z-T DEUR BINNENDR. MET DUBBELE AANSLAGDICHTING
PORTE Z-T DOUBLE JOINT DE BUTEE OUVR. VERS L'INT.
Z-T DOOR INW. OPEN. WITH DOUBLE WEATHER STRIP
Z-T TUER IN. OEFFN. MIT DOPPELANSCHLAGDICHTUNG

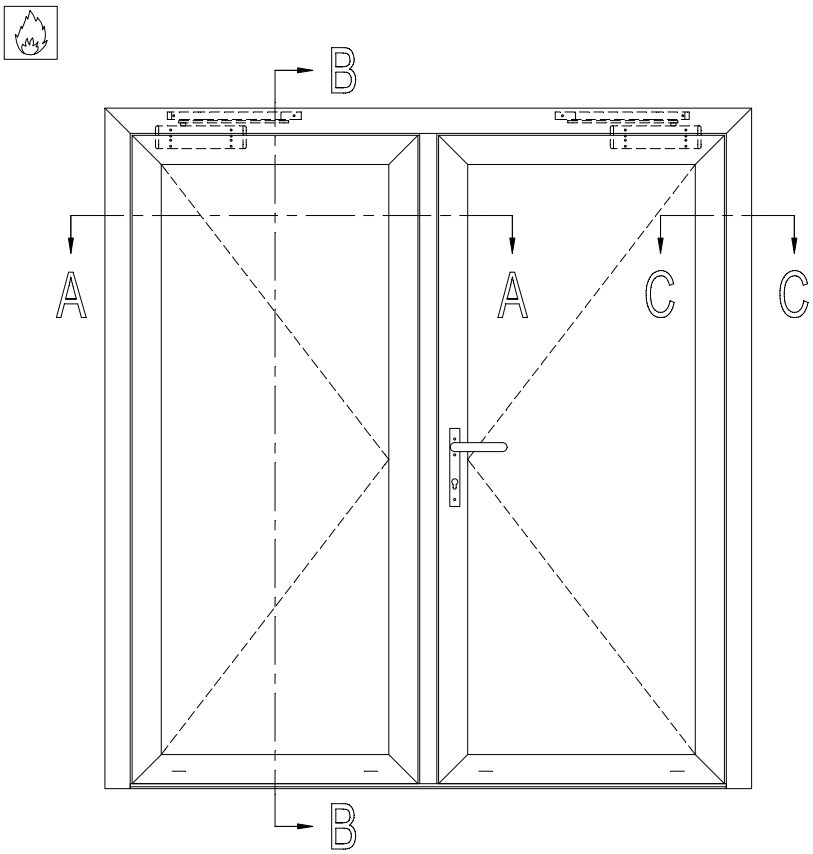

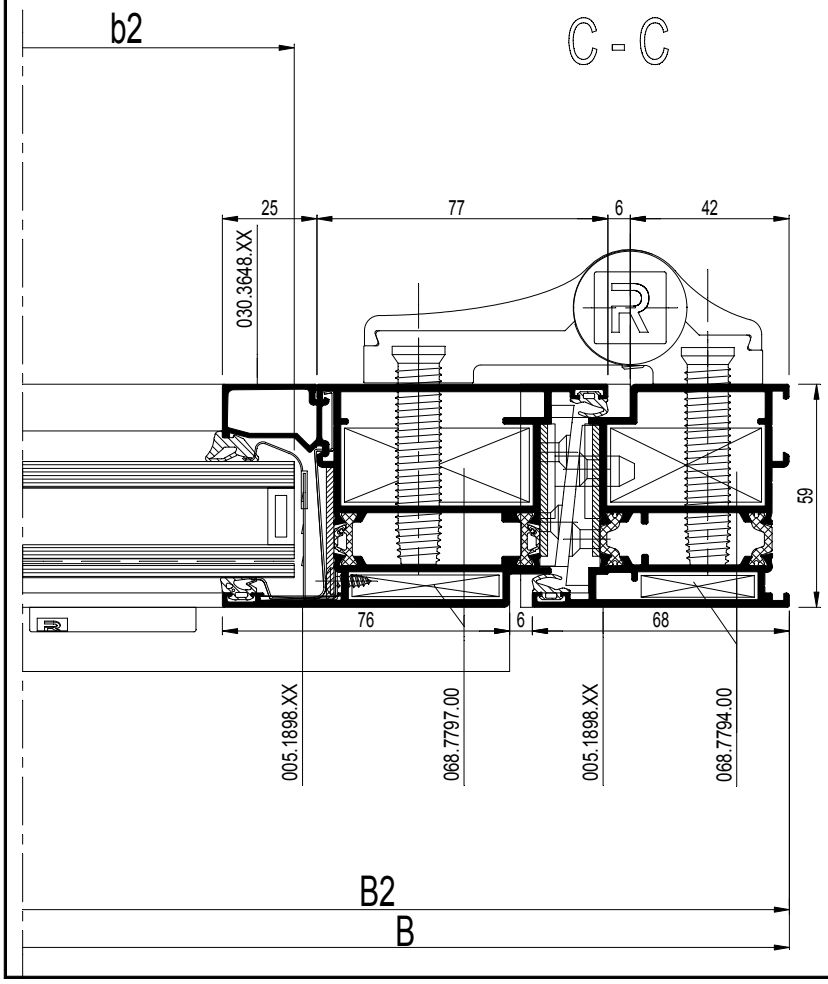

* Variant / Variante / Variant / Variante
Winddruk - Pression de vent
Windpressure - Windlast 150 Pa

		#
061.7302.ZC (din L)		1
of - ou - or - oder		
061.7303.ZC (din R)		1
052.5316.--		12
061.7722.-- (din L)		1
of - ou - or - oder		
061.7724.-- (din R)		1
052.5316.--		3
061.7721.--		2
052.5316.--		4
061.7725.-- (din L)		1
of - ou - or - oder		
061.7723.-- (din R)		1
052.5316.--		2
061.7726.--		1

Espagnoletslot - Fermeture Espagnolette (*)
Espagnolette lock - Falztreibriegel

		#
061.7151.--		1
052.5331.--		2
061.7155.--		1
061.7154.--		2
061.7156.--		1
061.7152.--		4
052.5308.--		8

of - ou - or - oder

Stangenslot - Serrure a Tige (*)
Bar Lock - Tuertreibriegel

		#
061.7199.--		1
of - ou - or - oder		
061.7198.--		1
050.5011.--		2
061.7183.--		2
061.7154.--		2
061.7192.--		1
061.7191.17		3
052.5317.--		6

* inbouw zie 089.M12A.F... / Encastrement voire 089.M12A.F..
* Embedding see 089.M12A.F... / Einbau siehe 089.M12A.F...

schaal - échelle
scale - Maßstab
1/2

D0081212

E

CS 68-FP
EW 30

Z-T DEUR BINNENDR. MET DUBBELE AANSLAGDICHTING
PORTE Z-T DOUBLE JOINT DE BUTEE OUVR. VERS L'INT.
Z-T DOOR INW. OPEN. WITH DOUBLE WEATHER STRIP
Z-T TUER IN. OEFFN. MIT DOPPELANSCHLAGDICHTUNG

		#
068.7794.00		2
068.7797.00		5
068.8807.00		3
060.8723.--		8
065.6656.XX		15.E.F...
065.6600.--		15.E.F...
061.7636.ZC	1	1
052.5316.--		2
061.7075.--		1
061.7648.--		2
052.5316.--		2
061.7642.--		6
052.5316.--		24
061.6416.--		1
052.5316.--		4
061.7643.--		1
061.9942.XX		1
061.8753.--		1
Op aanvraag		1
069.6831.XX		089.M12A.F...
069.8547.04		1
052.5318.--		2
069.8430.04		1
052.5311.--		4
069.8439.04		2
052.5311.--		8
080.9381.04		2x H
080.9080.04		(3xB)+(6xH)
080.9090.04		6
080.9440.04		12.F....
080.9320.04		12.F....
080.9114.SY		(2xb1)+(2xb2)
		+(4xh)
080.9126.SY		(2xb1)+(2xb2)
		+(4xh)
081.9092.04		12x47.5
052.5313.--		4
052.5318.--		1/300mm
052.5317.--		1/300mm
068.6355.--		089.M12A.F...
068.6356.--		089.M12A.F...
052.5320.--		089.M12A.F...
084.9025.04	F	--
084.9027.04	F	--
084.9016.--	F	089.M12A.F...

B - B

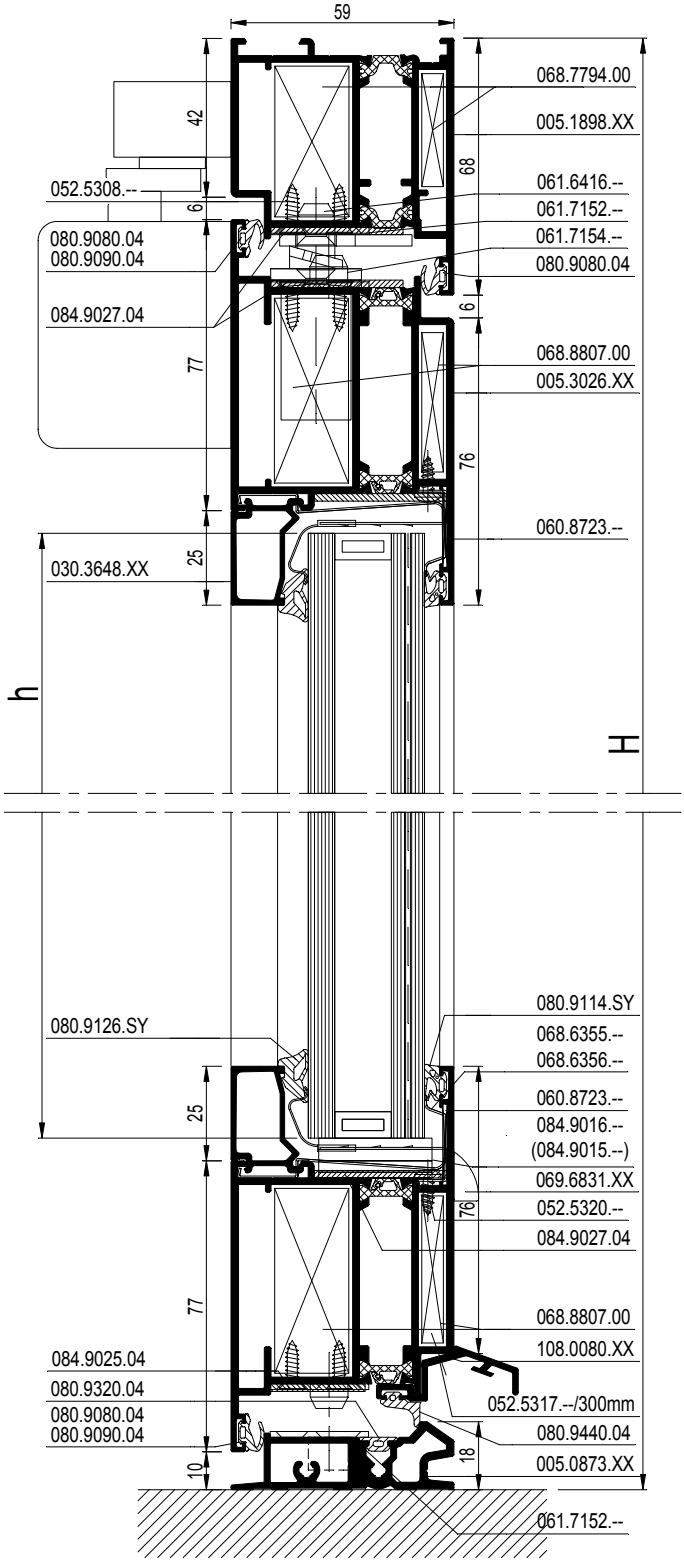

schaal - échelle
scale - Maßstab
1/2

D0081212

E

CS 68-FP
EW 30

DUBBELE RAAMDEUR NAAR BINNENDR. MET BORSTEL
PORTE-FENETRE DOUBLE OUV. VERS L'INT. AVEC BROSSE
DOUBLE WINDOW-DOOR INWARD OPENING WITH BRUSH
ZWEIFLUEGELIGE FENSTERTUER NACH IN. OEFF. MIT BUERSTEN

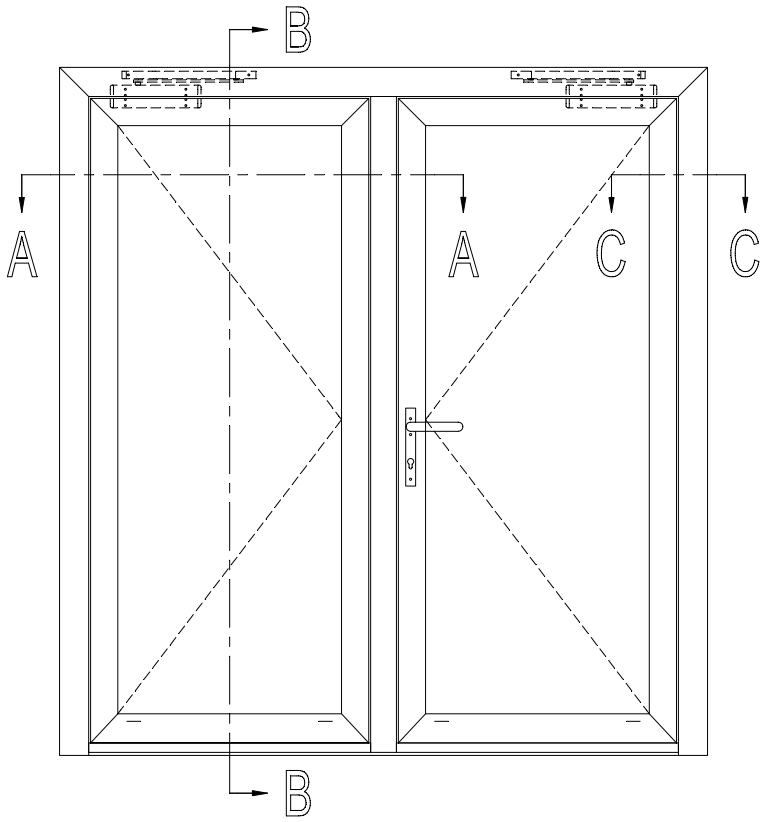

A - A

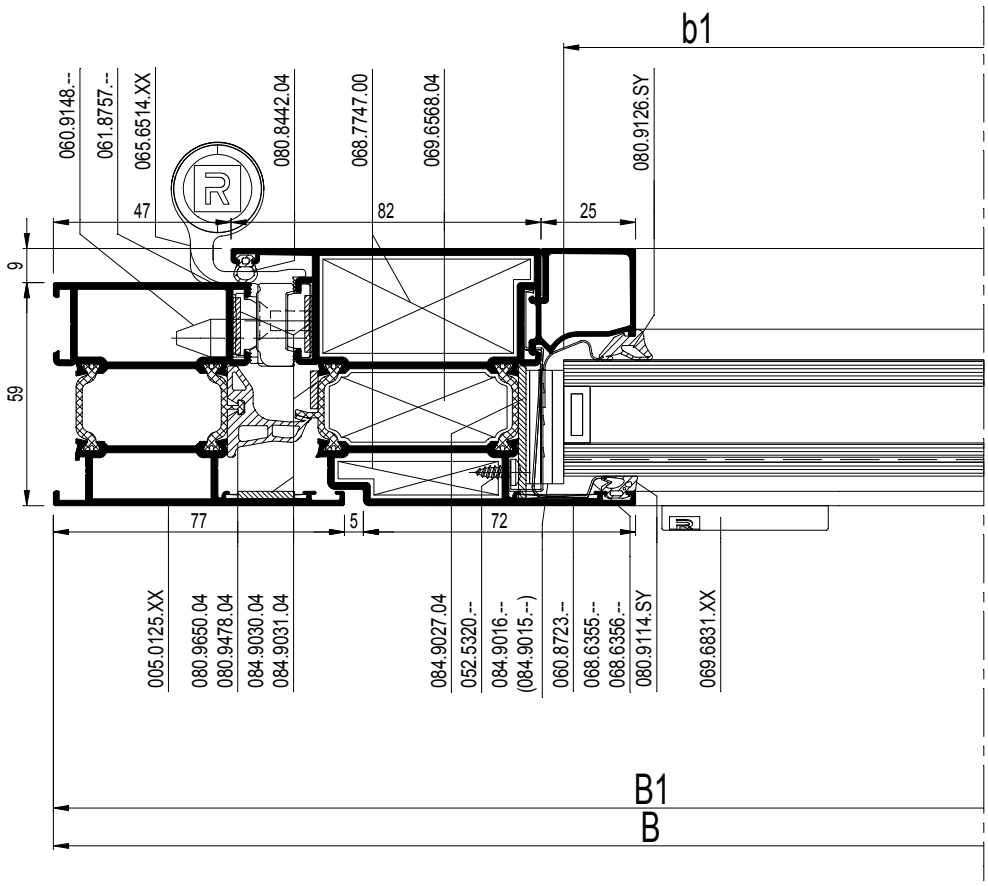

schaal - échelle
scale - Maßstab
1/2

D0081241

E

CS 68-FP
EW 30

DUBBELE RAAMDEUR NAAR BINNENDR. MET BORSTEL
PORTE-FENETRE DOUBLE OUV. VERS L'INT. AVEC BROSSE
DOUBLE WINDOW-DOOR INWARD OPENING WITH BRUSH
ZWEIFLUEGELIGE FENSTERTUER NACH IN. OEFF. MIT BUERSTEN

	#	Lm
005.0125.XX	1	B
	1	H
	1	H
005.0121.XX	2	B1 - 51
	2	B2 - 51
	4	H - 55
005.0115.XX	1	H - 86
005.0049.XX	1	B1 - 113
	1	B2 - 113
030.3668.XX	2	B1 - 215
	2	B2 - 215
	4	H - 269

b1 = B1 - 227
b2 = B2 - 227
h = H - 231

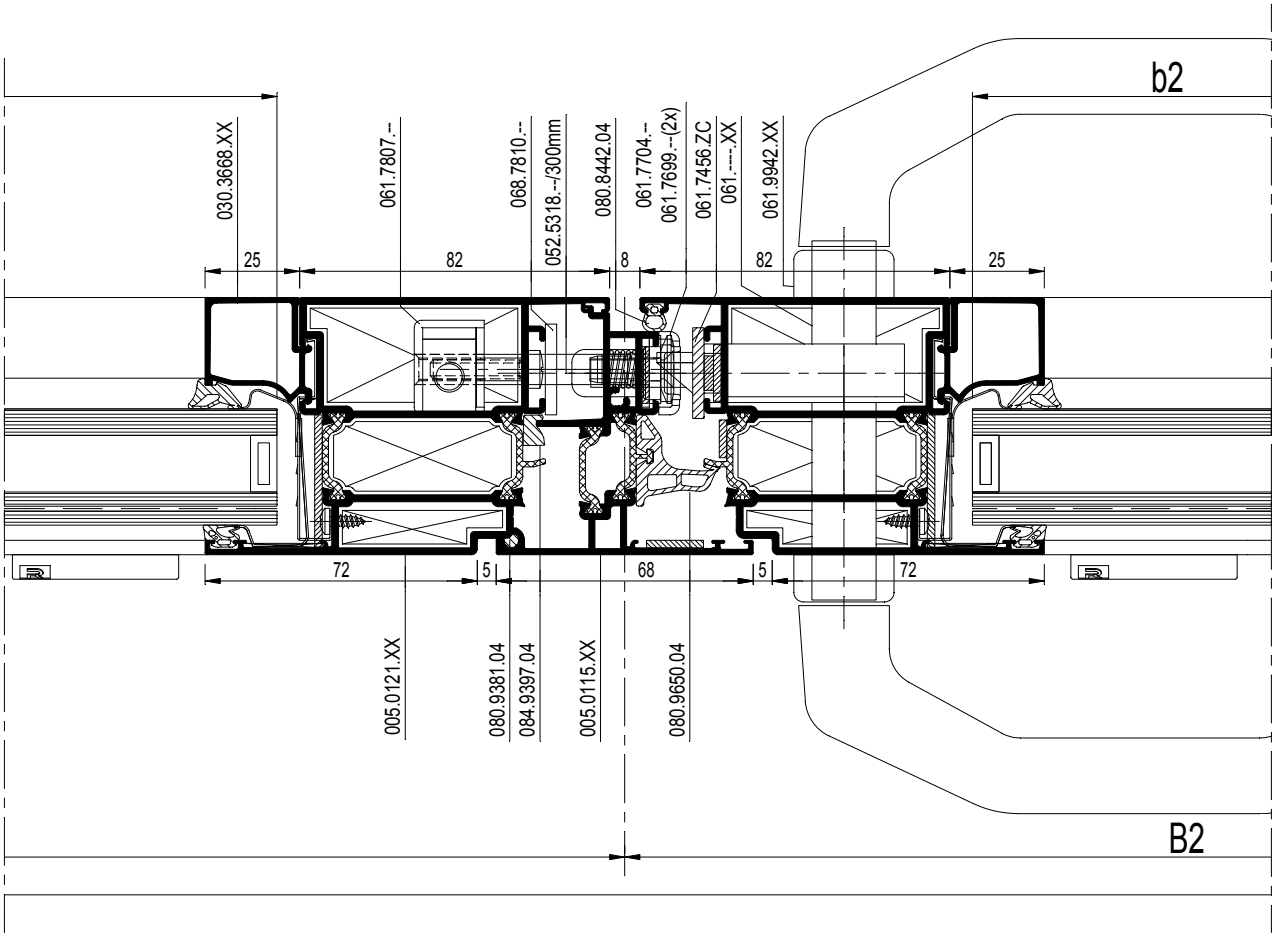

schaal - échelle
scale - Maßstab
1/2

D0081241

E

CS 68-FP
EW 30

DUBBELE RAAMDEUR NAAR BINNENDR. MET BORSTEL
PORTE-FENETRE DOUBLE OUV. VERS L'INT. AVEC BROSSE
DOUBLE WINDOW-DOOR INWARD OPENING WITH BRUSH
ZWEIFLUEGELIGE FENSTERTUER NACH IN. OEFF. MIT BUERSTEN

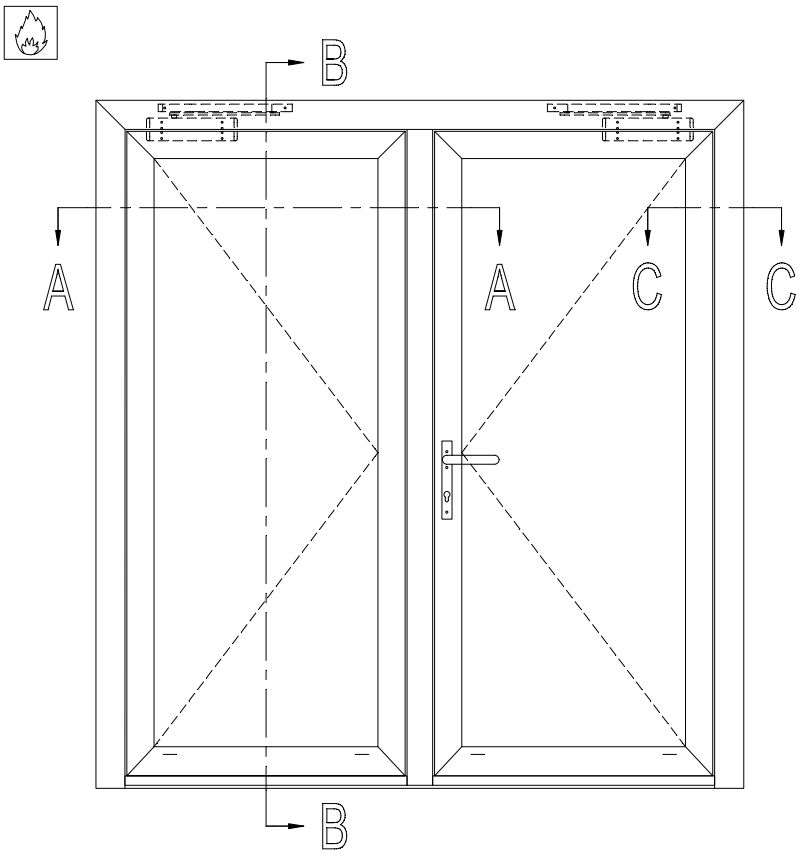

		#
080.9381.04		H - 93
084.9397.04		H - 93
080.8442.04		(1xB) + (3xH)
080.9650.04		(1xB) + (3xH)
080.9478.04		2
080.9114.SY		(2xb1) + (2xb2)
		+ (4xh)
080.9126.SY		(2xb1) + (2xb2)
		+ (4xh)
068.6355.--		089.M12A.F...
068.6356.--		089.M12A.F...
052.5320.--		089.M12A.F...
084.9010.04		1xB
084.9027.04		(2xB)+(4xH)
084.9030.04		(1xB)+(3xH)
084.9031.04		(3xB)+(9xH)
084.9016.--		089.M12A.F...

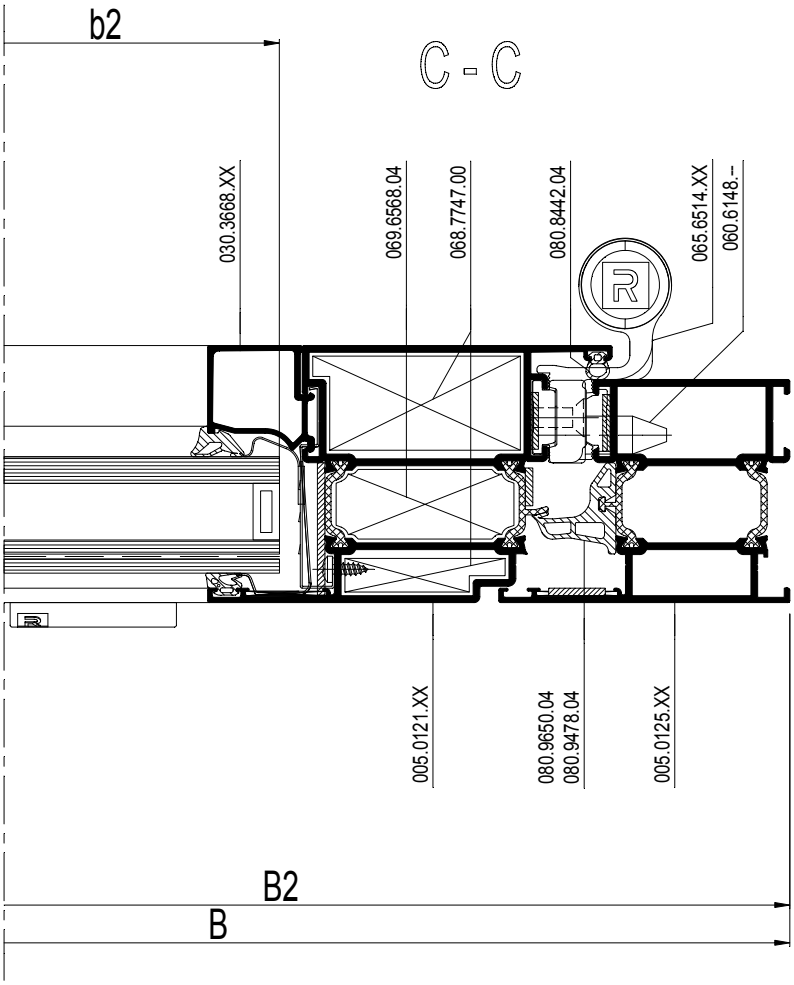

schaal - échelle
scale - Maßstab
1/2

D0081242

E

CS 68-FP
EW 30

DUBBELE RAAMDEUR NAAR BINNENDR. MET BORSTEL
PORTE-FENETRE DOUBLE OUV. VERS L'INT. AVEC BROSSE
DOUBLE WINDOW-DOOR INWARD OPENING WITH BRUSH
ZWEIFLUEGELIGE FENSTERTUER NACH IN. OEFF. MIT BUERSTEN

		#
060.8723.--		10
068.7854.00		2
068.7855.00		2
069.6567.04		2
068.7747.00		8
069.6568.04		8
061.7456.ZC	5	1
050.5011.--		9
057.5711.--		9
061.7704.--		1
050.5011.--		3
057.5711.--		3
061.7699.--		2
050.5011.--		4
057.5711.--		4
061.9942.XX		1
061.8754.--		1
061.7025.--		1
060.9148.--		6
061.8757.--		6
060.6147.--		12
053.5412.--		12
065.6514.XX		15E.F...
061.7807.--		1
061.7804.--		1
050.5001.--		2
068.7810.--		1
Op aanvraag		1
069.6831.XX		089.M12A.F...
069.6689.04		1
052.5313.--		1
052.5318.--		1/300mm
052.5310.--		1/300mm
081.9142.04		B1 - 65
		B2 - 93
061.6455.--		2
052.5336.--		4
052.5331.--		4

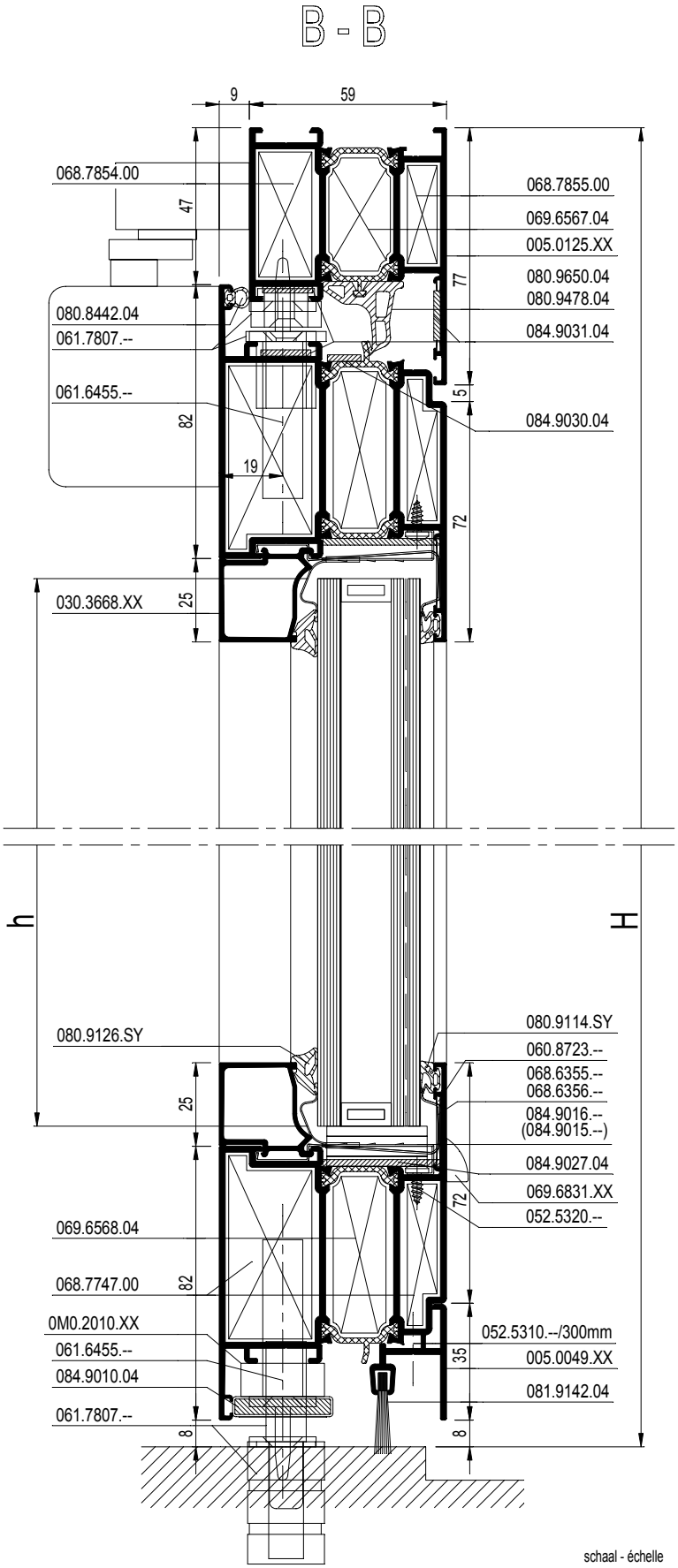

schaal - échelle
scale - Maßstab
1/2

D0081242

E

CS 68-FP
EW 30

Z-T DEUR BUITENDRAAIEND MET BORSTELAFSLUITING
JOINT-BROSSE PORTE Z-T OUVRANT VERS L'EXTERIEUR
Z-T DOOR OUTWARD OPENING WITH BRUSH
Z-T TUER AUSSEN OEFFN. MIT BUERSTENDICHTUNG

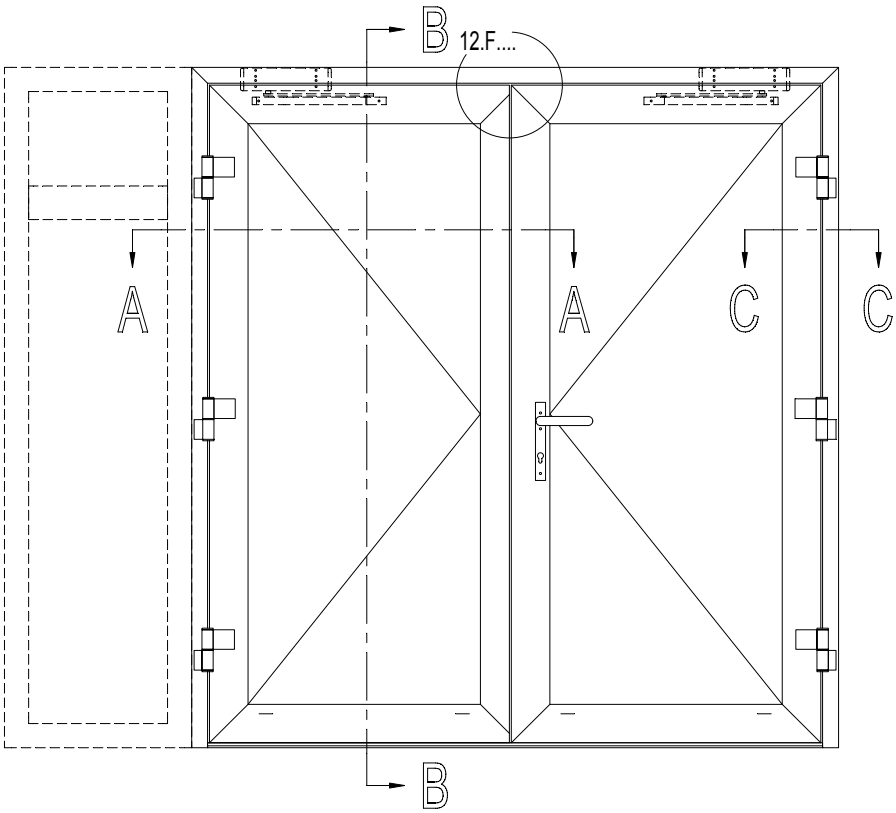

b1 = B1 - 201
b2 = B2 - 201
h = H - 224

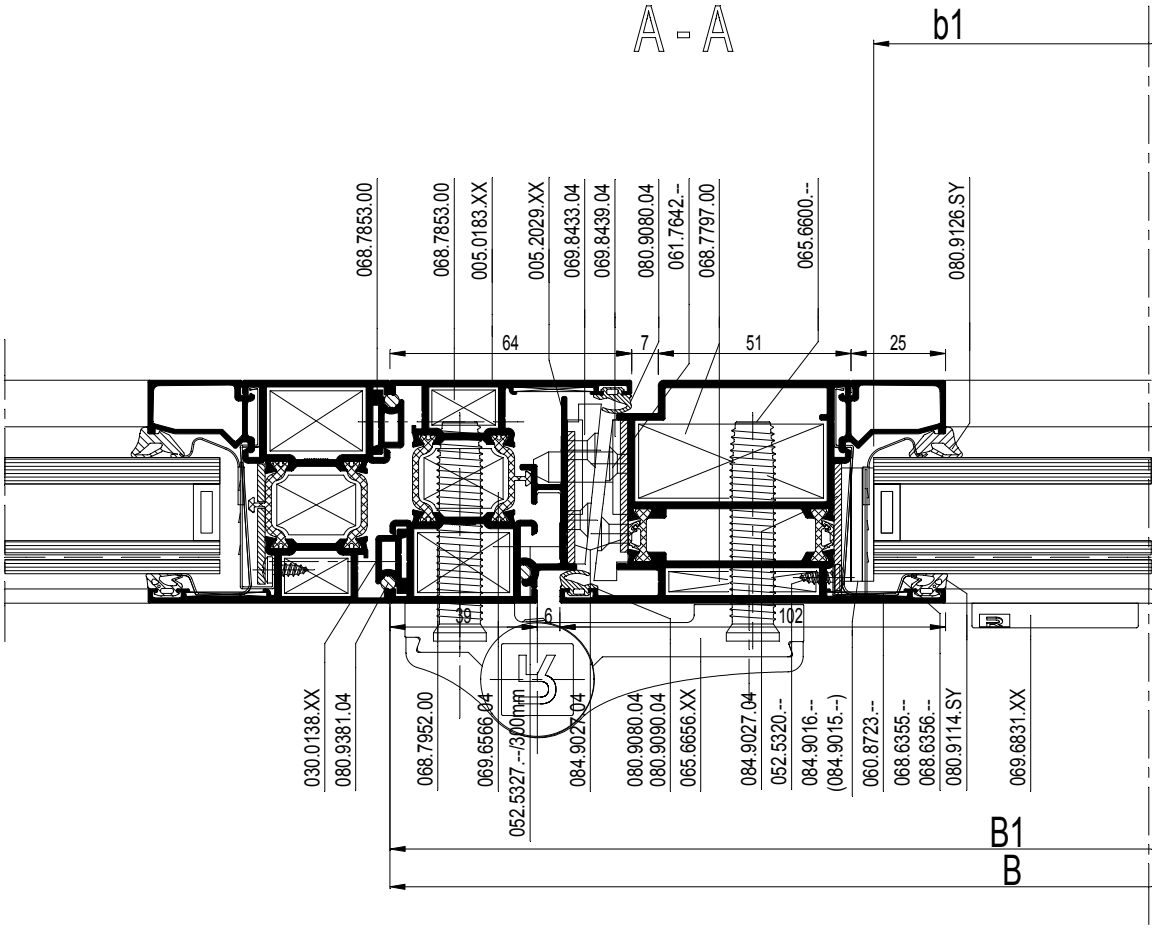

schaal - échelle
scale - Maßstab
1/2

D0081256

E

CS 68-FP
EW 30

Z-T DEUR BUITENDRAAIEND MET BORSTELAFSLUITING
JOINT-BROSSE PORTE Z-T OUVRANT VERS L'EXTERIEUR
Z-T DOOR OUTWARD OPENING WITH BRUSH
Z-T TUER AUSSEN OEFFN. MIT BUERSTENDICHTUNG

	#	Lm
005.0183.XX	1	B
	1	H
	1	H
005.3014.XX	2	B1 - 35
	2	B2 - 35
	2	H - 58
	1	H - 58
005.3026.XX	1	H - 58
005.2029.XX	1	B - 69
	1	H - 34,5
	1	H - 34,5
005.0177.XX	1	B1 - 56
	1	B2 - 77
005.0071.XX	1	B - 112
030.3648.XX	2	B1 - 189
	2	B2 - 189
	4	H - 262

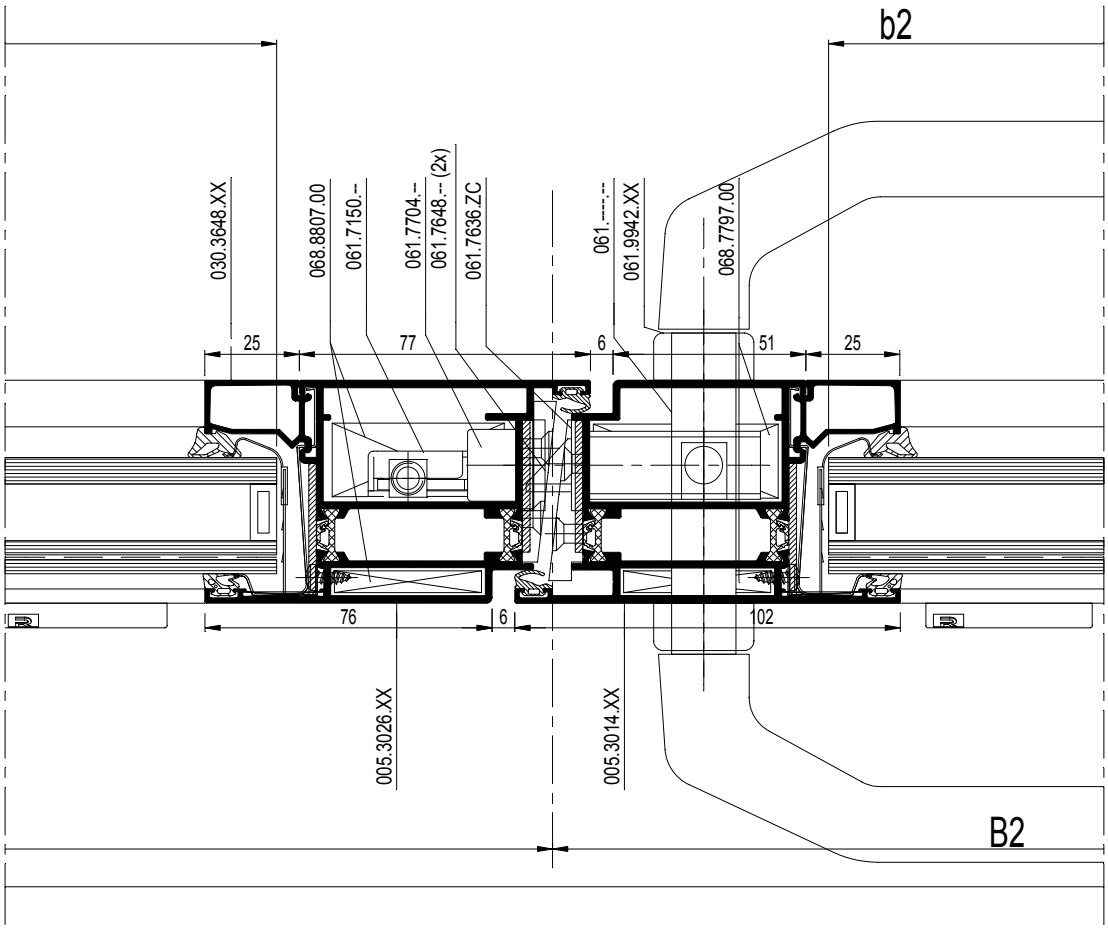

schaal - échelle
scale - Maßstab
1/2

D0081256

E

CS 68-FP
EW 30

Z-T DEUR BUITENDRAAIEND MET BORSTELAFSLUITING
JOINT-BROSSE PORTE Z-T OUVRANT VERS L'EXTERIEUR
Z-T DOOR OUTWARD OPENING WITH BRUSH
Z-T TUER AUSSEN OEFFN. MIT BUERSTENDICHTUNG

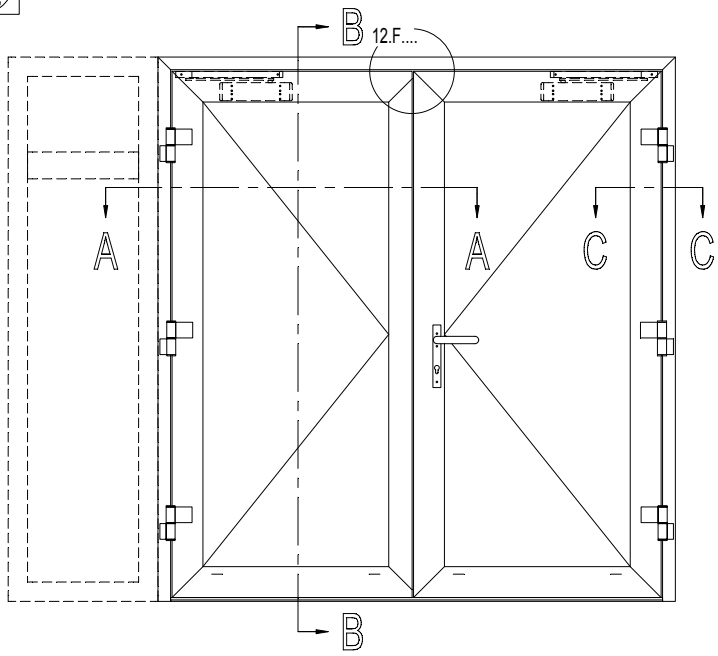

Espagnoletslot - Fermeture Espagnolette (*)
Espagnolette lock - Falztreibriegel

		#
061.7150.--		1
052.5331.--		2
061.7155.--		1
061.7154.--		2
061.7156.--		1
061.7152.--		4
052.5308.--		6

of - ou - or - oder

Stangenslot - Serrure a Tige (*)
Bar Lock - Tuertreibriegel

		#
061.7199.--		1
of - ou - or - oder 061.7198.--		1
050.5011.--		2
061.7183.--		2
061.7154.--		2
061.7192.--		1
061.7191.17		2
052.5317.--		4

* inbouw zie 089.M12A.F... / Encastrement voire 089.M12A.F..
* Embedding see 089.M12A.F... / Einbau siehe 089.M12A.F...

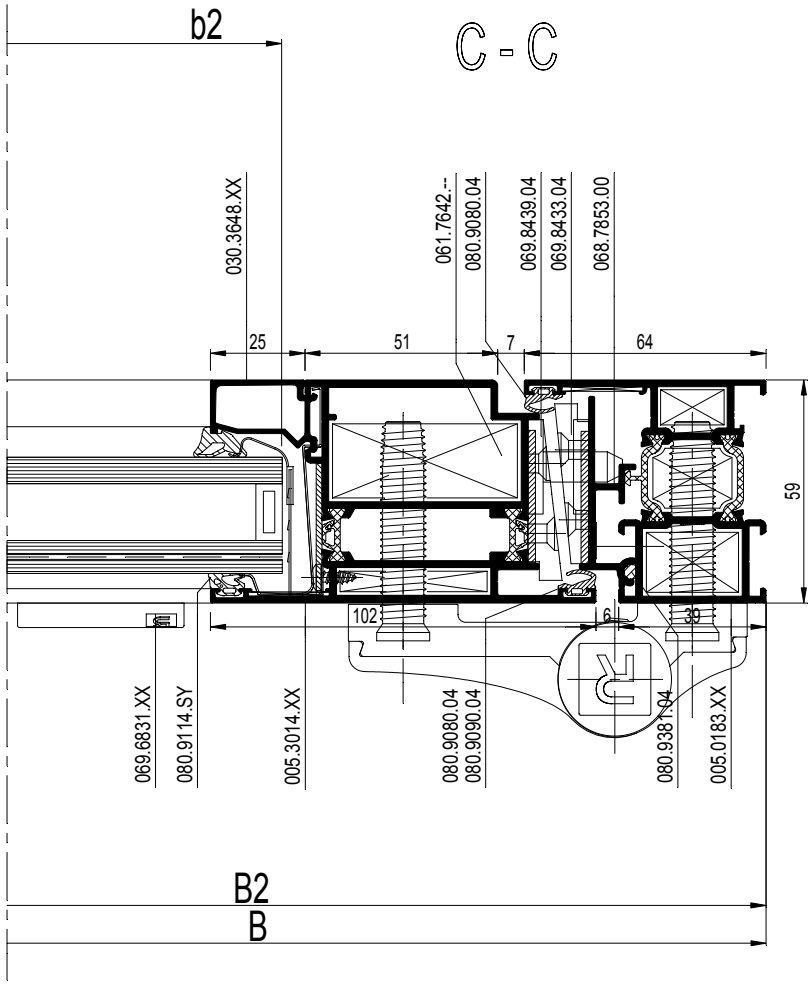

E

schaal - échelle
scale - Maßstab
1/2

D0081257

CS 68-FP
EW 30

Z-T DEUR BUITENDRAAIEND MET BORSTELAFSLUITING
JOINT-BROSSE PORTE Z-T OUVRANT VERS L'EXTERIEUR
Z-T DOOR OUTWARD OPENING WITH BRUSH
Z-T TUER AUSSEN OEFFN. MIT BUERSTENDICHTUNG

		#
068.7952.00		2
068.7853.00		2
069.6566.04		2
068.7797.00		5
069.8807.00		3
060.8723.--		10
065.6656.XX		15E.F...
065.6600.--		15E.F...
061.7636.ZC	1	1
052.5316.--		2
061.7075.--		1
061.7648.--		2
052.5316.--		2
061.6416.--		1
052.5316.--		4
061.7642.--		6
052.5316.--		24
061.7643.--		1
061.9942.XX		1
061.8753.--		3
065.7582.14		2
065.7584.14		1
069.6831.XX		089.M12A.F...
069.8511.XX		1
069.8512.XX		1
069.8433.04		1
052.5311.--		4
069.8439.04		2
052.5311.--		8
080.9381.04		(1xB)+(2xH)
080.9080.04		(2xB)+(4xH)
080.9090.04		3
080.9114.SY		(2xb1)+(2xb2)
		+(4xh)
080.9126.SY		(2xb1)+(2xb2)
		+(4xh)
081.9092.04		16x47.5
081.9141.04		089.M12A.F...
052.5317.--		1/300mm
052.5327.--		1/300mm
068.6355.--		089.M12A.F...
068.6356.--		089.M12A.F...
052.5320.--		089.M12A.F...
084.9010.04	F	1xB
084.9027.04	F	(4xB)+(10xH)
084.9021.04	F	089.M12A.F...

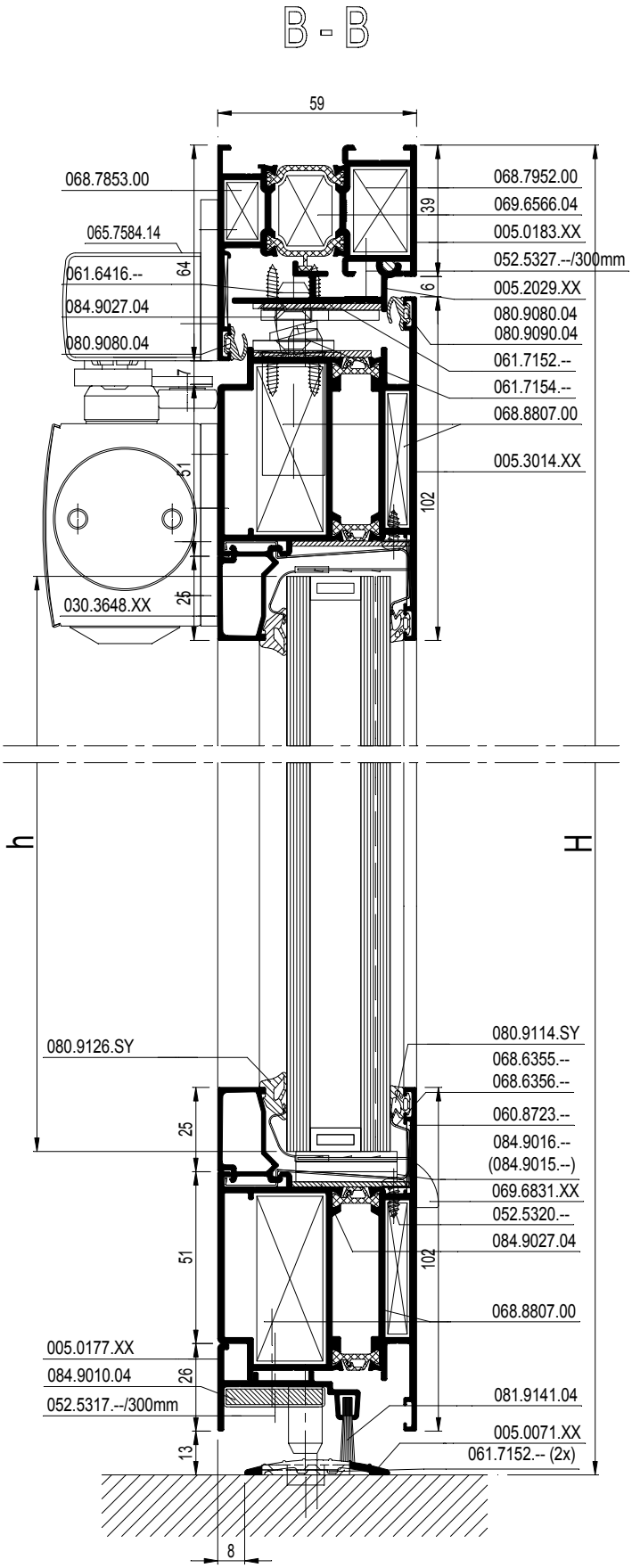

schaal - échelle
scale - Maßstab
1/2

D0081257

E

CS 68-FP
EW 30

DUBBELE RAAMDEUR NAAR BUITENDR. MET BORSTEL
PORTE-FEN. DOUBLE OUVRANT VERS L'EXT. AVEC BROSSE
DOUBLE WINDOW-DOOR OUTWARD OPENING WITH BRUSH
ZWEIFL. FENSTERT. NACH AUSSEN OEFF. MIT BUERSTEN

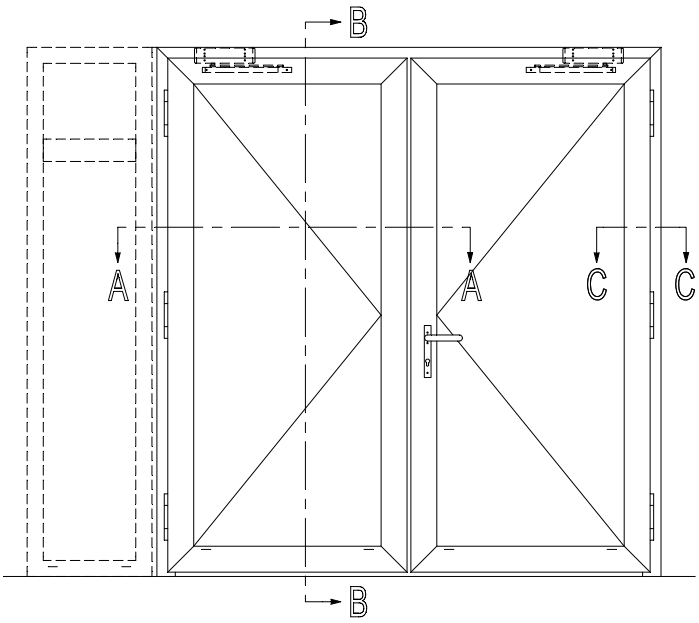

b1 = B1 - 219
b2 = B2 - 219
h = H - 223

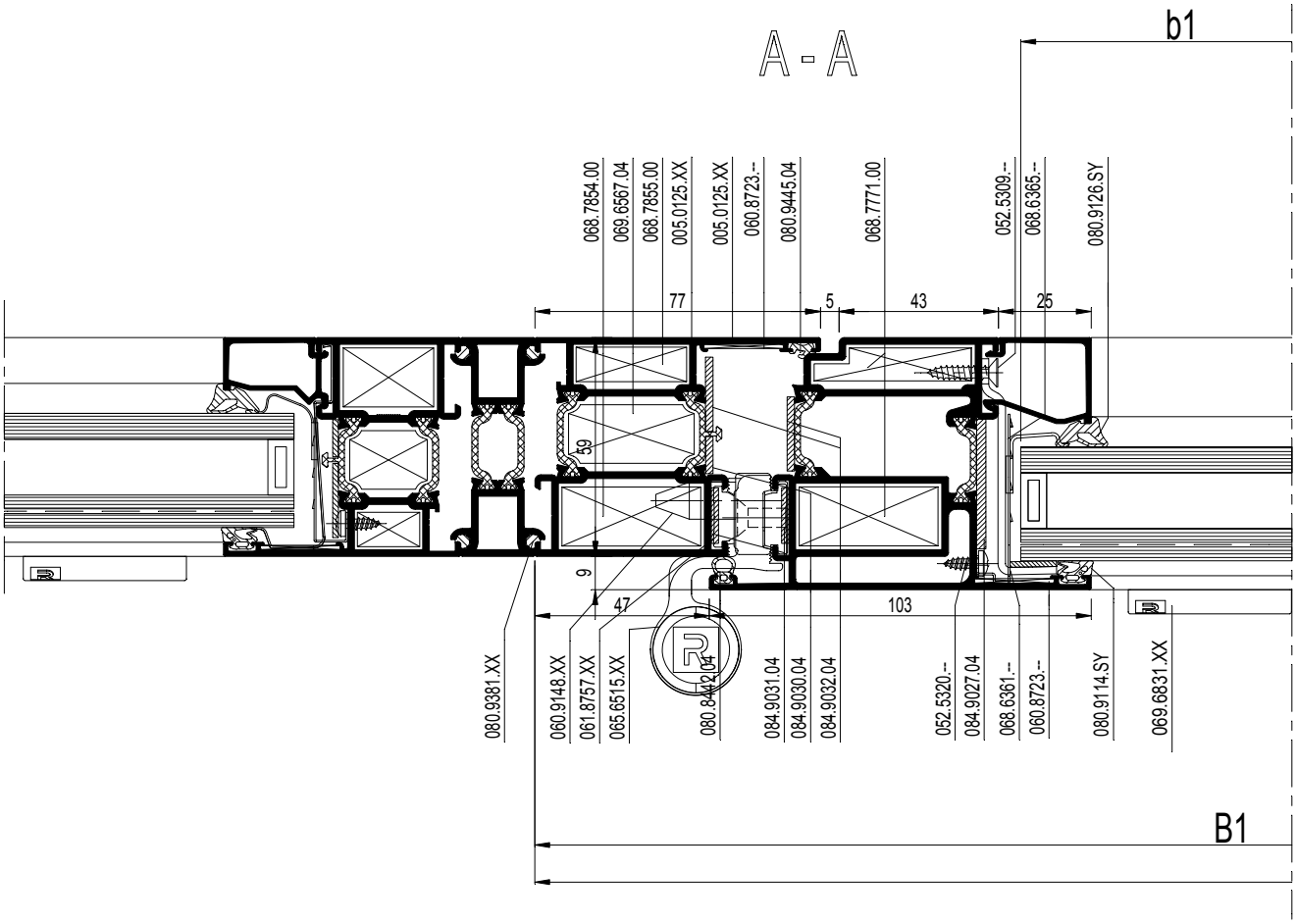

schaal - échelle
scale - Maßstab
1/2

E

CS 68-FP
EW 30

DUBBELE RAAMDEUR NAAR BUITENDR. MET BORSTEL
PORTE-FEN. DOUBLE OUVRANT VERS L'EXT. AVEC BROSSE
DOUBLE WINDOW-DOOR OUTWARD OPENING WITH BRUSH
ZWEIFL. FENSTERT. NACH AUSSEN OEFF. MIT BUERSTEN

		#	Lm
005.0125.XX		1	B
		1	H
		1	H
005.0052.XX		2	B1 - 51
		2	B2 - 51
		4	H - 55
005.0115.XX		1	H - 86
005.0049.XX		1	B1 - 113
		1	B2 - 113
030.3611.XX		2	B1 - 207
		2	B2 - 207
		4	H - 261
004.3846.XX		1	B

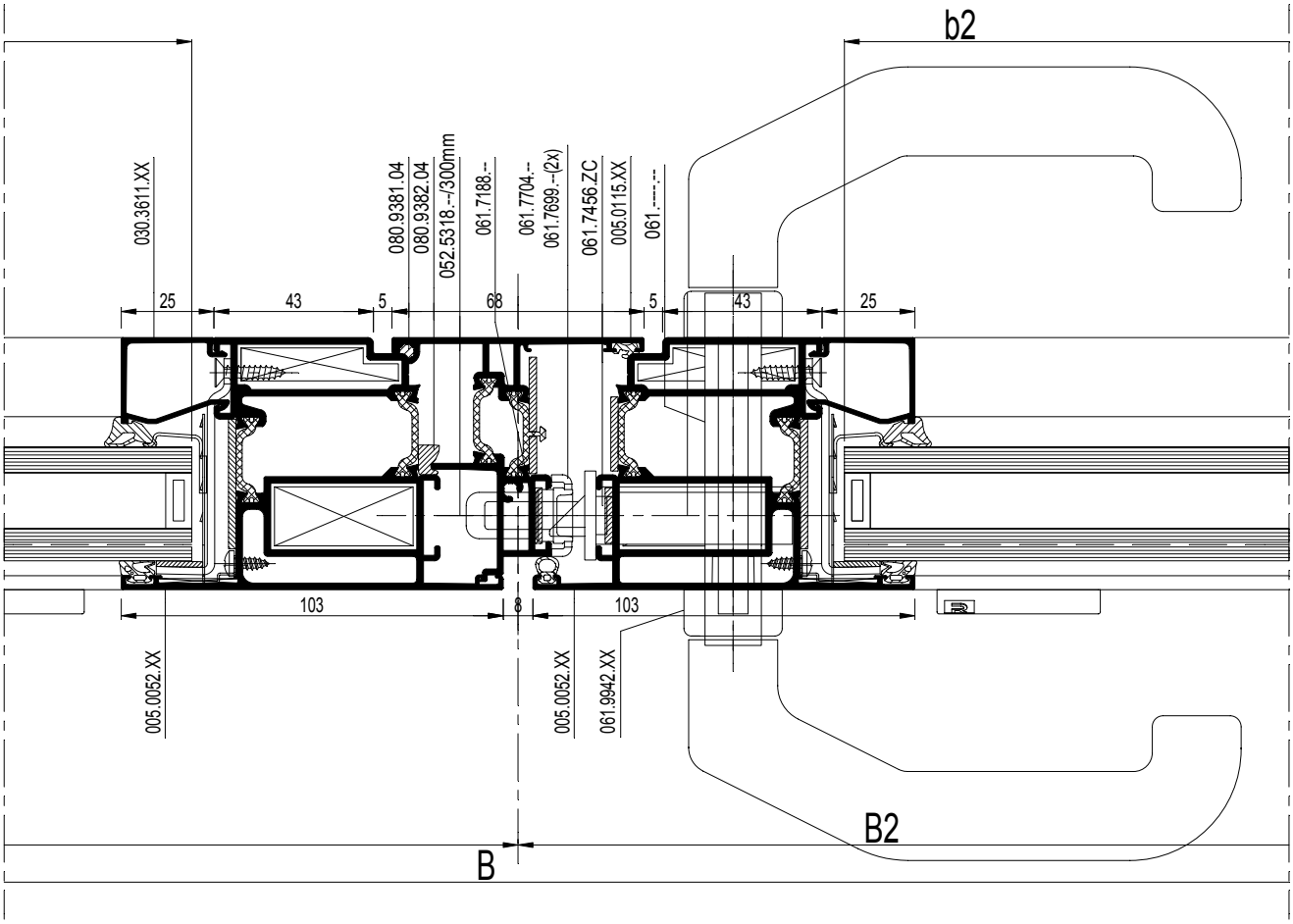

schaal - échelle
scale - Maßstab
1/2

E

CS 68-FP
EW 30

DUBBELE RAAMDEUR NAAR BUITENDR. MET BORSTEL
PORTE-FEN. DOUBLE OUVRANT VERS L'EXT. AVEC BROSSE
DOUBLE WINDOW-DOOR OUTWARD OPENING WITH BRUSH
ZWEIFL. FENSTERT. NACH AUSSEN OEFF. MIT BUERSTEN

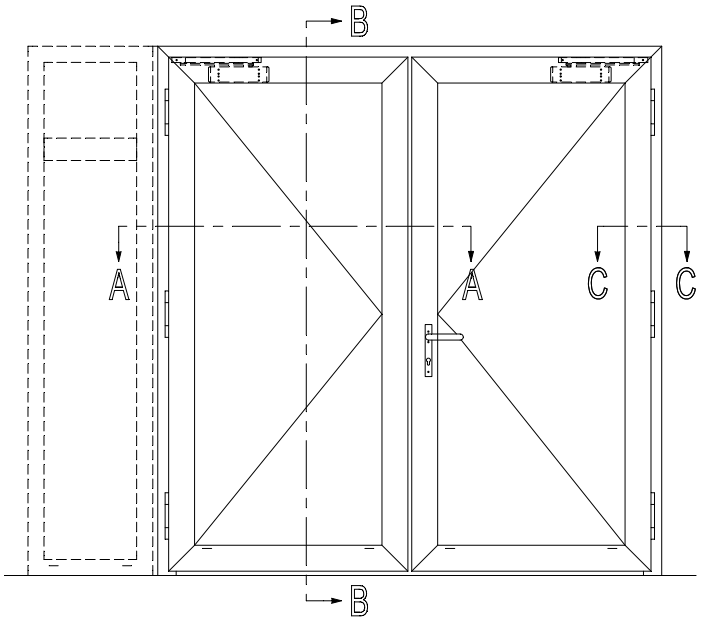

		#
081.9142.04		B1-67
		B2-97
080.8442.04		B+(3xH)
080.9445.04		B+(3xH)
080.9381.04		H
080.9382.04		H
080.9114.SY		(4xb)+(4xh)
080.9126.SY		(4xb)+(4xh)
084.9027.04		(2xB)+(4xH)
084.9030.04		(1xB)+(3xH)
084.9031.04		(2xB)+(6xH)
084.9032.04		(2xB)+(6xH)
084.9016.--		089.M12A.F...

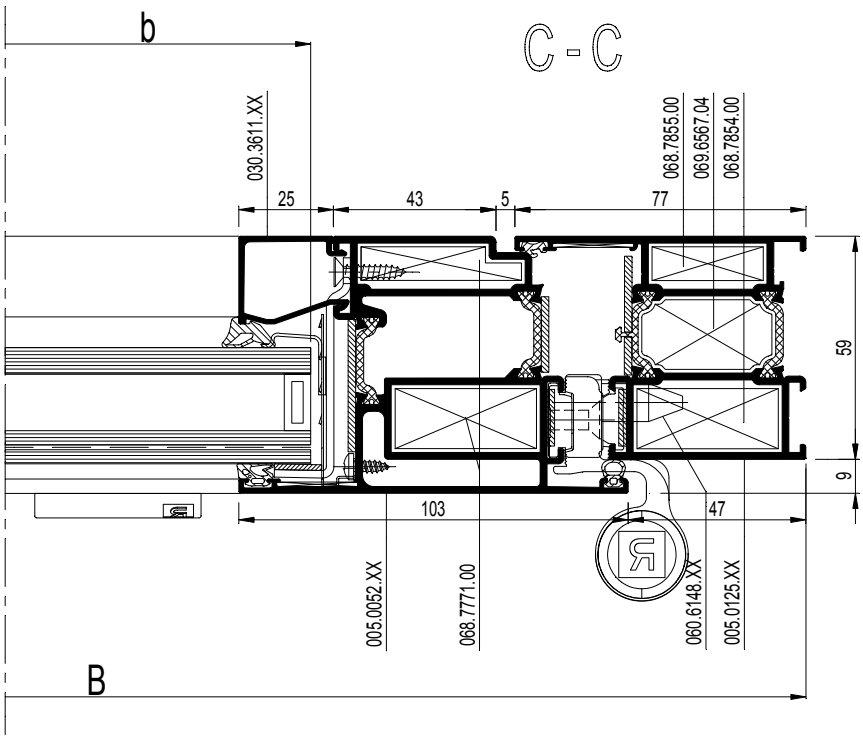

E

schaal - échelle
scale - Maßstab
1/2

D008/291

CS 68-FP
EW 30

DUBBELE RAAMDEUR NAAR BUITENDR. MET BORSTEL
PORTE-FEN. DOUBLE OUVRANT VERS L'EXT. AVEC BROSSE
DOUBLE WINDOW-DOOR OUTWARD OPENING WITH BRUSH
ZWEIFL. FENSTERT. NACH AUSSEN OEFF. MIT BUERSTEN

		#
060.8723.--		10
068.7854.00		2
068.7855.00		2
069.6567.04		2
068.7771.00		8
065.6515.XX		15E.F....
061.9942.XX		1
061.8754.--		4
061.7456.ZC		1
050.5011.--		9
057.5711.--		9
061.7704.--		1
050.5011.--		3
057.5711.--		3
061.7699.--		2
050.5011.--		4
057.5711.--		4
061.7025.--		1
061.6455.--		2
052.5336.--		4
052.5331.--		4
060.6148.--		6
061.8757.--		6
060.6147.--		12
053.5412.--		12
065.7582.14		2
065.7584.14		1
061.7188.--		2
061.7191.17		1
061.7200.--		1
052.5317.--		2
069.6831.XX		089.M12A.F...
069.6689.04		1
052.5313.--		1
068.6365.--		089.M12A.F...
068.6361.--		089.M12A.F...
052.5309.--		089.M12A.F...
052.5320.--		089.M12A.F...
052.5310.--		1/300mm
052.5312.--		1/300mm
052.5318.--		1/300mm

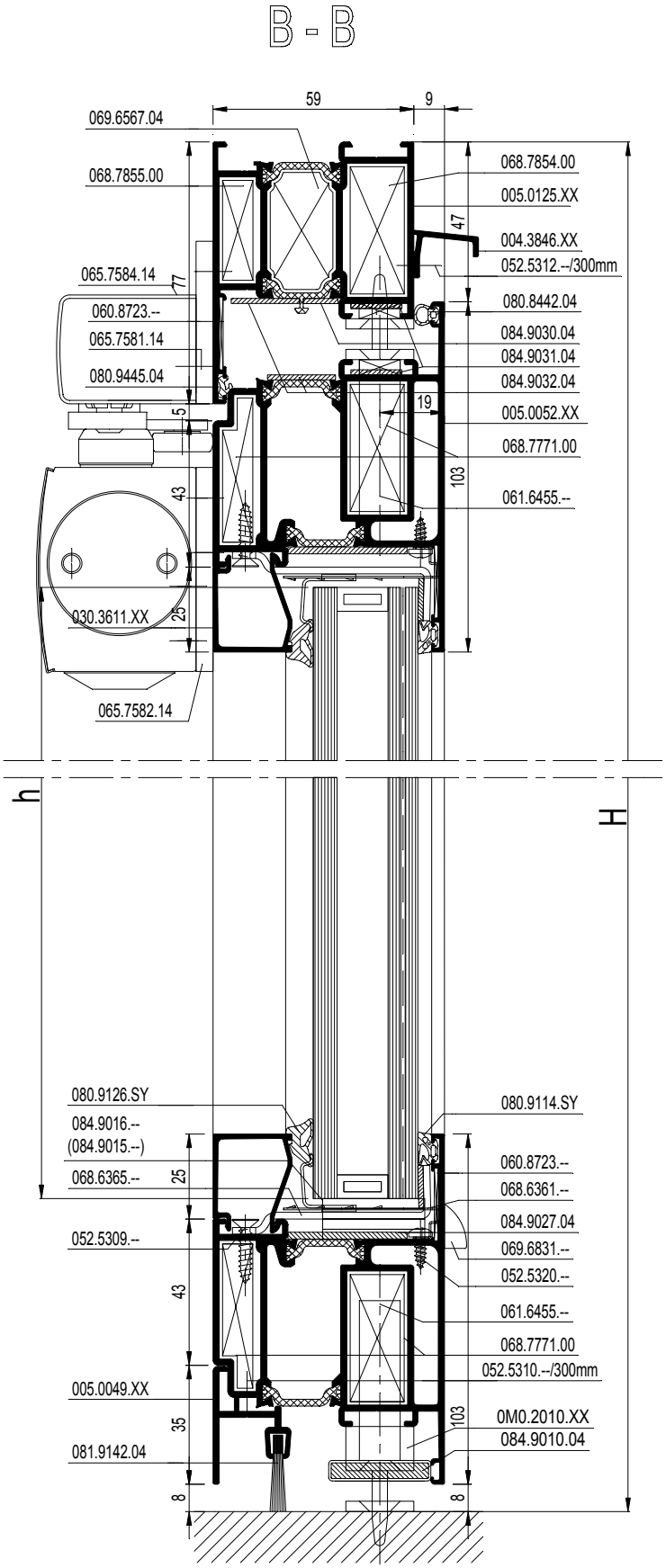

schaal - échelle
scale - Maßstab
1/2

D0081291

E

F

Reynaers Aluminium

Montagetekeningen
Fabrication et montage
Assembly drawings
Montagezeichnungen

F

D0081606

KLEMBLOKKEN
BLOCS DE SERRAGE
CLAMP BLOCKS
SPANNBACKEN

097.0415.00

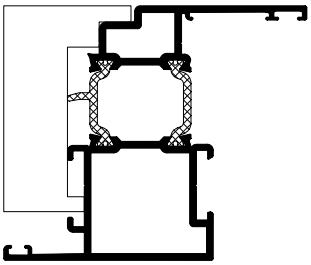

005.0052.XX	005.0202.XX	005.1521.XX
005.0102.XX	005.0203.XX	
005.0112.XX	005.0221.XX	
005.0121.XX	005.0251.XX	
005.0152.XX	005.0252.XX	
005.0192.XX	005.0292.XX	

097.0414.00

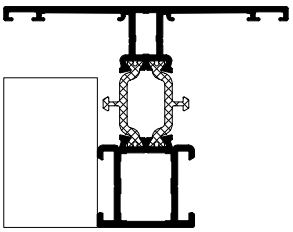

005.0105.XX	005.0544.XX	005.1110.XX	005.1423.XX
005.0113.XX	005.0813.XX	005.1213.XX	005.1449.XX
005.0114.XX	005.0814.XX	005.1220.XX	005.1456.XX
005.0115.XX	005.0820.XX	005.1270.XX	005.2439.XX
005.0120.XX	005.0823.XX	005.1271.XX	008.0514.XX
005.0123.XX	005.0859.XX	005.1413.XX	008.0540.XX
005.0420.XX	005.0860.XX	005.1414.XX	
005.0438.XX	005.1100.XX	005.1415.XX	
005.0447.XX	005.1109.XX	005.1416.XX	

097.0385.00

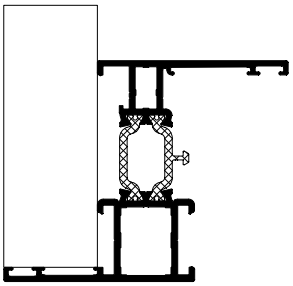

005.0111.XX
005.0144.XX
005.1443.XX
005.1451.XX

097.0209.00

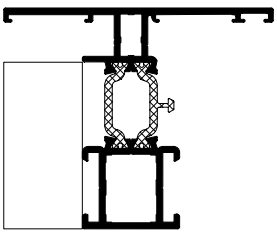

005.0141.XX
005.0139.XX

F

D0081606

ONTWATERING T-PROFIEL
DRAINAGE TRAVERSE
DRAINAGE TRANSOM-MULLION
ENTWAESSERUNG SPROSSE

				005.0113.XX 005.0114.XX 005.0120.XX 005.0123.XX 005.0544.XX 005.0813.XX 005.0814.XX 005.0820.XX 005.0823.XX 005.0859.XX 005.0860.XX
	095.C500.00		095.C600.00	
			097.P900.00	
	095.C700.00		097.P900.00	
	---		---	
			*097.0381.00	
			SBZ 122 SBZ 140	

*enkel bij vast raam
*seulement pour fenêtre fixe
*only for fixed window
*nur bei Festverglasung

097.P900.00

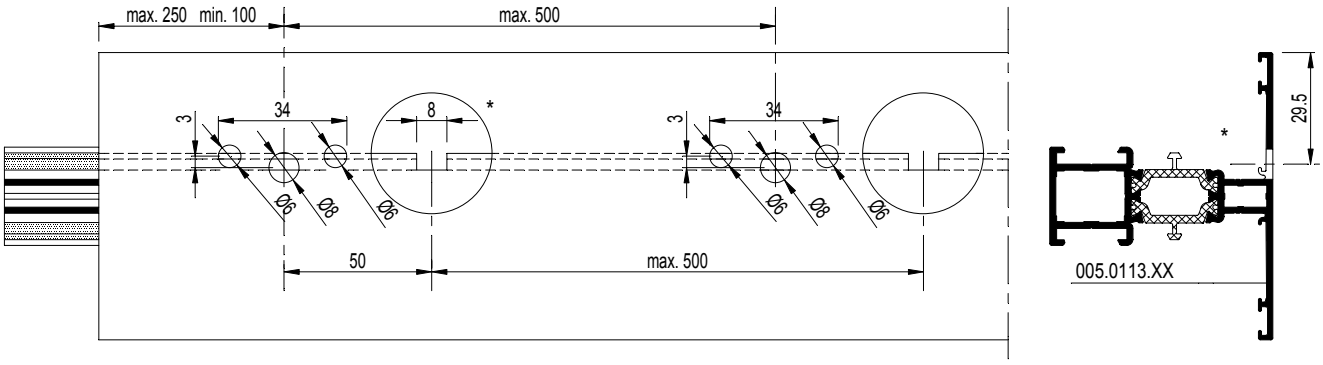

SBZ 122 - SBZ 140

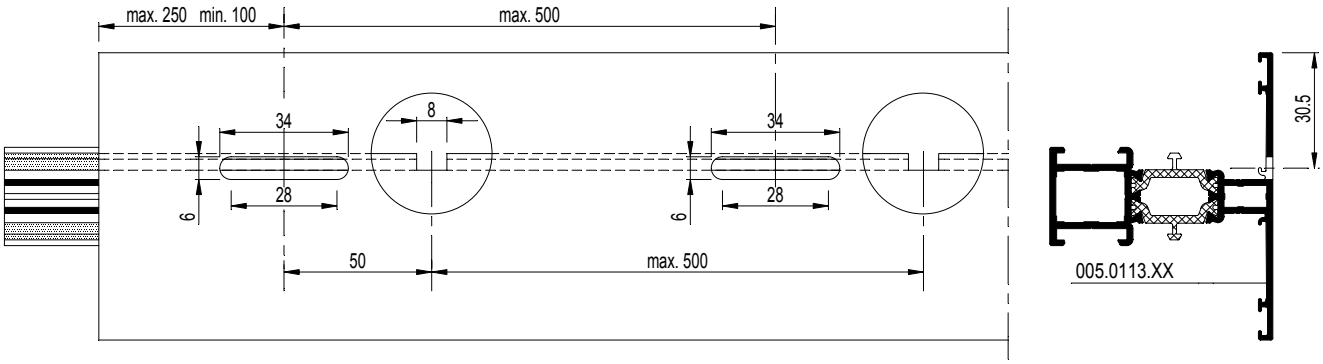

F

D0081608

ONTWATERING T-PROFIEL
DRAINAGE TRAVERSE
DRAINAGE TRANSOM-MULLION
ENTWAESSERUNG SPROSSE

				
	---		---	005.0113.XX 005.0114.XX 005.0120.XX 005.0123.XX 005.0544.XX 005.0813.XX 005.0814.XX 005.0820.XX 005.0823.XX 005.0859.XX 005.0860.XX
			---	
	---		---	
	---		---	
			097.0373.00 *097.0381.00	

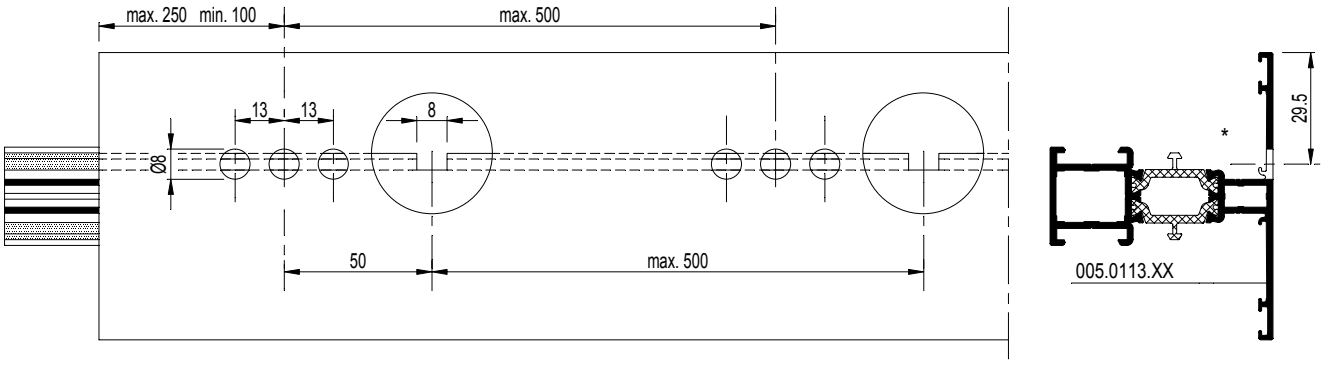

Ontwatering

VOLGORDE
1. Correct ponsen, boren of frezen
2. Ontbramen (Indien noodzakelijk)
3. Stof en zaagresten verwijderen
4. Ontvetten met Reynafinish 60, art. nr. 086.9210.--
5. Reynaprotector aanbrengen, art. nr. 086.9209.--

Drainage

ORDRE
1. Poinçonnage, forage ou fraisage correct
2. Ebavurage (si nécessaire)
3. Enlèvement des poussières et des copeaux
4. Dégraissage avec Reynafinish 60, art. nr. 086.9210.--
5. Application de Reynaprotector, art. nr. 086.9209.--

Drainage

SEQUENCE
1. Correct punching, drilling or milling
2. Deburring (if necessary)
3. Removing dust and saw-dust
4. Degreasing with Reynafinish 60, art. nr. 086.9210.--
5. Applying Reynaprotector, art. nr. 086.9209.--

Entwässerung

REIHENFOLGE
1. Stanzen, bohren oder fräsen
2. Entgraten (falls erforderlich)
3. Staub und Sägereste entfernen
4. Entfetten mit Reynafinish 60, art. nr. 086.9210.--
5. Reynaprotector aufbringen, art. nr. 086.9209.--

ONTWATERING KADER RAMEN NAAR BINNENDRAAIEND
DRAINAGE DORMANT FENETRES OUVRANT VERS L'INTERIEUR
DRAINAGE OUTER FRAME INWARD OPENING WINDOWS
ENTWAESSERUNG BLENDRAHMEN FENSTER NACH INNEN OEFFNEND

	095.C500.00		095.C600.00	005.0125.XX 005.0136.XX 005.0140.XX 005.0183.XX 005.0525.XX 005.0826.XX 005.0880.XX 005.0139.XX 005.0141.XX 005.0197.XX	005.0111.XX 005.0113.XX 005.0114.XX 005.0120.XX 005.0123.XX 005.0544.XX 005.0813.XX 005.0814.XX 005.0820.XX 005.0823.XX 005.0859.XX 005.0880.XX
			097.P900.00		
	095.C700.00		097.P900.00		
	---		---		
			*097.0381.00	005.0538.XX**	
			SBZ 122 SBZ 140		

*enkel bij vast raam
*seulement pour fenêtre fixe
*only for fixed window
*nur bei festverglasung

**enkel met 097.P900.00
**seulement avec 097.P900.00
**only with 097.P900.00
**nur mitt 097.P900.00

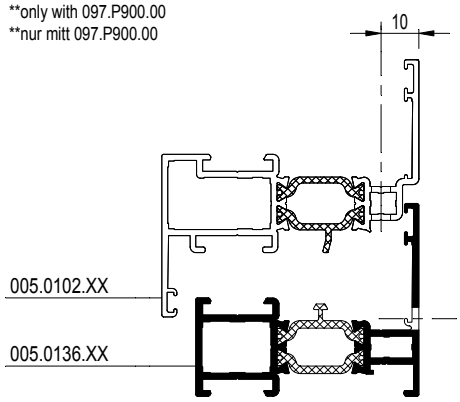

097.P900.00

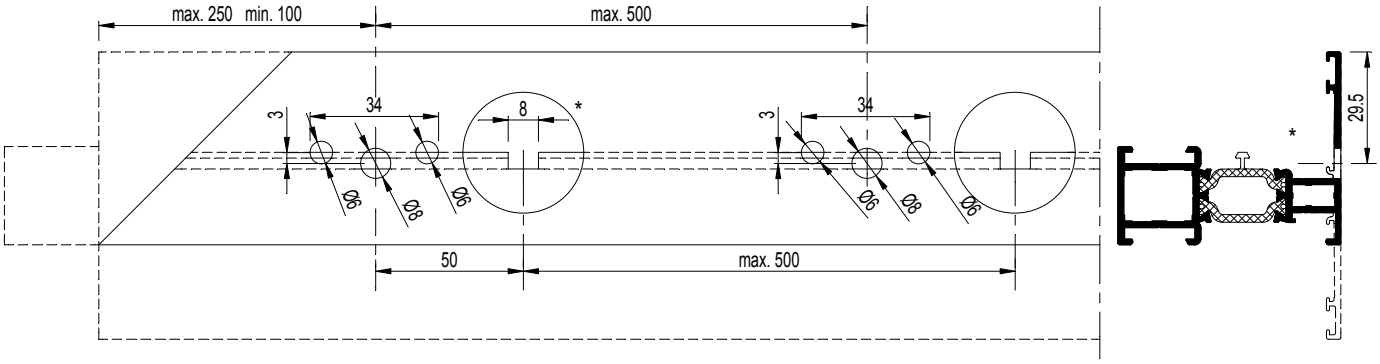

SBZ 122 - SBZ 140

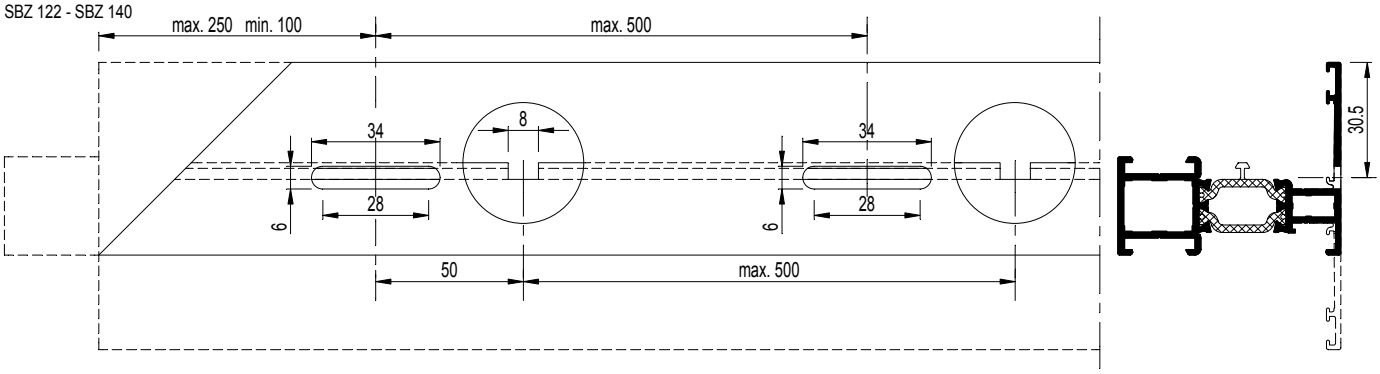

F

D0081609

ONTWATERING KADER RAMEN NAAR BINNENDRAAIEND
DRAINAGE DORMANT FENETRES OUVRANT VERS L'INTERIEUR
DRAINAGE OUTER FRAME INWARD OPENING WINDOWS
ENTWAESSERUNG BLENDRAHMEN FENSTER NACH INNEN OEFFNEND

			005.0125.XX 005.0136.XX 005.0139.XX 005.0140.XX 005.0141.XX 005.0183.XX 005.0197.XX 005.0525.XX 005.0826.XX	005.0111.XX 005.0113.XX 005.0114.XX 005.0120.XX 005.0123.XX 005.0544.XX 005.0813.XX 005.0814.XX 005.0820.XX 005.0823.XX 005.0859.XX 005.0860.XX
---		---		
---		---		
---		---		
		097.0373.00 *097.0381.00		

			005.0538.XX 005.1536.XX 005.1583.XX	005.1505.XX 005.1506.XX 005.1513.XX
---		---		
---		---		
---		---		
		097.0406.00 *097.0381.00		

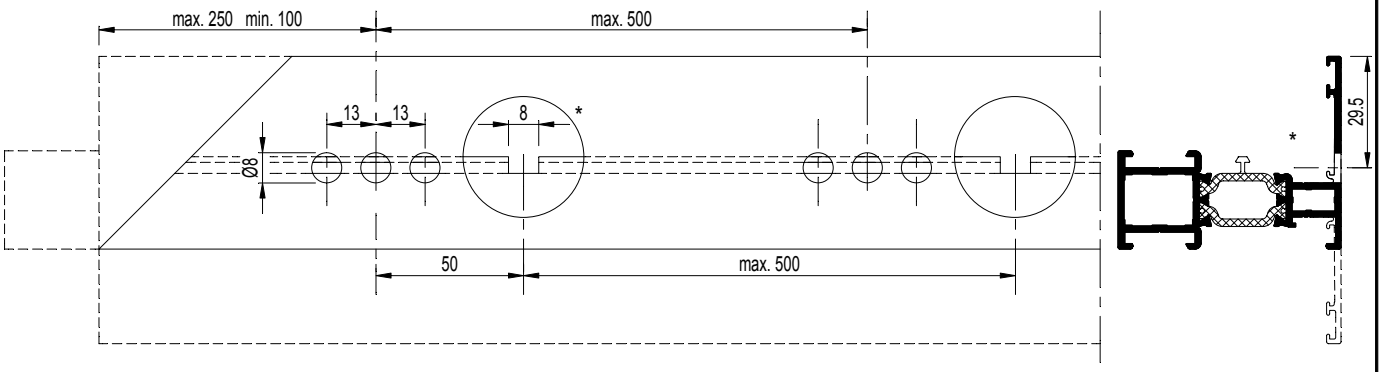

Ontwatering

VOLGORDE
1. Correct ponsen, boren of frezen
2. Ontbramen (Indien noodzakelijk)
3. Stof en zaagresten verwijderen
4. Ontvetten met Reynafinish 60, art. nr. 086.9210.--
5. Reynaprotector aanbrengen, art. nr. 086.9209.--

Drainage

ORDRE
1. Poinçonnage, forage ou fraisage correct
2. Ebavurage (si nécessaire)
3. Enlèvement des poussières et des copeaux
4. Dégraissage avec Reynafinish 60, art. nr. 086.9210.--
5. Application de Reynaprotector, art. nr. 086.9209.--

Drainage

SEQUENCE
1. Correct punching, drilling or milling
2. Deburring (if necessary)
3. Removing dust and saw-dust
4. Degreasing with Reynafinish 60, art. nr. 086.9210.--
5. Applying Reynaprotector, art. nr. 086.9209.--

Entwässerung

REIHENFOLGE
1. Stanzen, bohren oder fräsen
2. Entgraten (falls erforderlich)
3. Staub und Sägereste entfernen
4. Entfetten mit Reynafinish 60, art. nr. 086.9210.--
5. Reynaprotector aufbringen, art. nr. 086.9209.--

F

D0081609

ONTWATERING KADER RAMEN NAAR BINNENDRAAIEND
DRAINAGE DORMANT FENETRES OUVRANT VERS L'INTERIEUR
DRAINAGE OUTER FRAME INWARD OPENING WINDOWS
ENTWAESSERUNG BLENDRAHMEN FENSTER NACH INNEN OEFFNEND

				005.1216.XX 005.1236.XX	005.1213.XX 005.1220.XX
	---		---		

	---		---		
			097.0373.00 *097.0381.00		
			SBZ 122 SBZ 140		

*enkel bij vast raam
*seulement pour fenêtre fixe
*only for fixed window
*nur bei festverglasung

097.0373.00

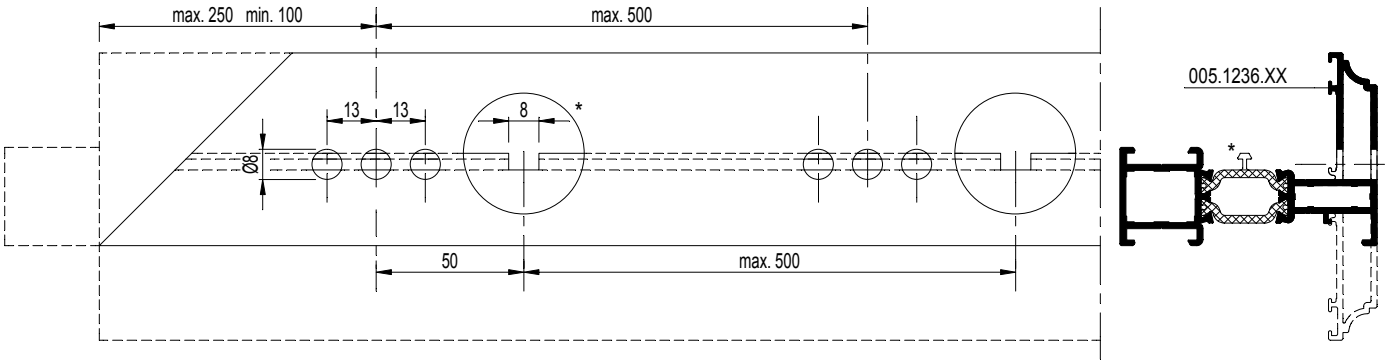

SBZ 122 - SBZ 140

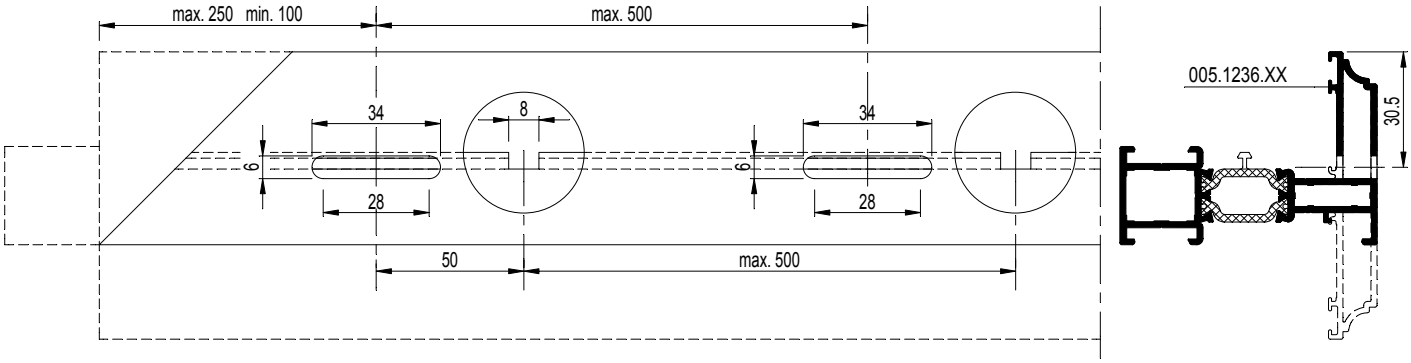

F

D0081610

ONTWATERING KADER RAMEN NAAR BINNENDRAAIEND
DRAINAGE DORMANT FENETRES OUVRANT VERS L'INTERIEUR
DRAINAGE OUTER FRAME INWARD OPENING WINDOWS
ENTWAESSERUNG BLENDRAHMEN FENSTER NACH INNEN OEFFNEND

				005.1249.XX 005.1250.XX	005.1270.XX 005.1271.XX
	---		---		

	---		---		
			097.0373.00 *097.0381.00		
			SBZ 122 SBZ 140		

097.0373.00

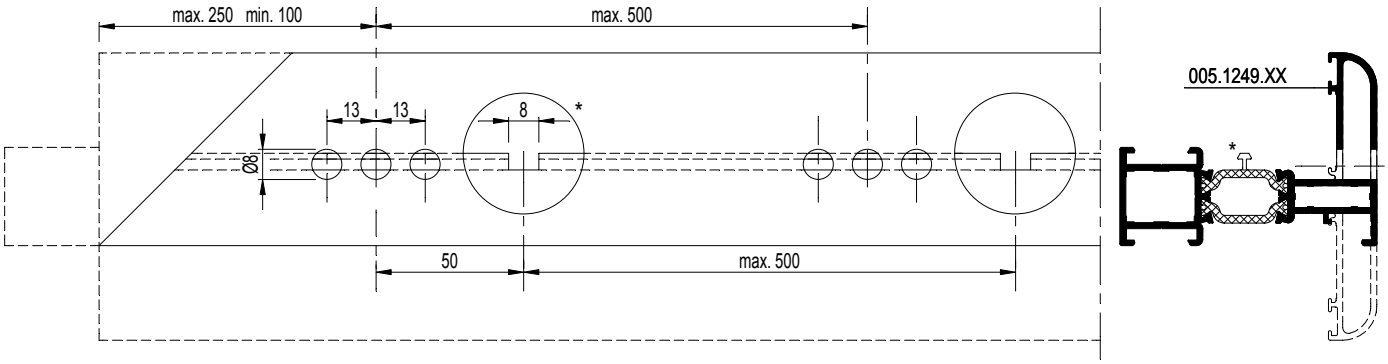

SBZ 122 - SBZ 140

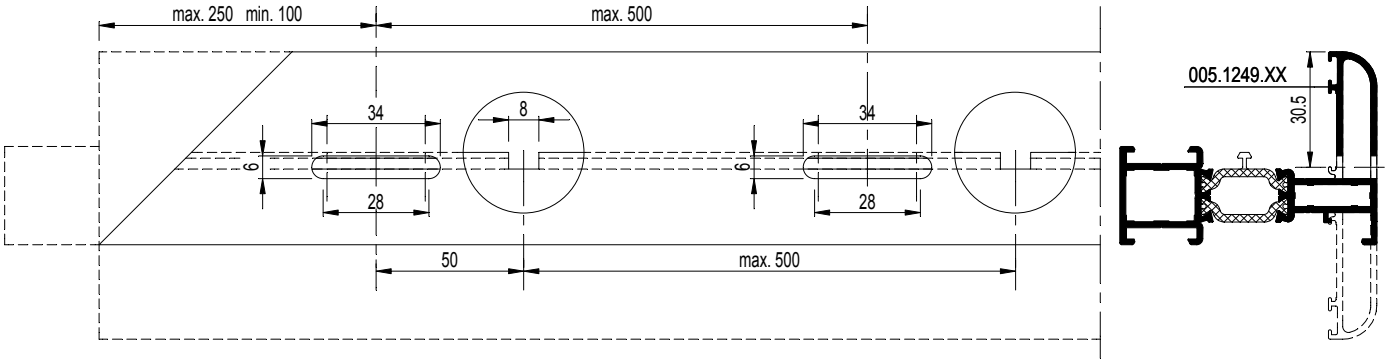

Ontwatering

VOLGORDE
1. Correct ponsen, boren of frezen
2. Ontbramen (Indien noodzakelijk)
3. Stof en zaagresten verwijderen
4. Ontvetten met Reynafinish 60, art. nr. 086.9210.--
5. Reynaprotector aanbrengen, art. nr. 086.9209.--

Drainage

ORDRE
1. Poinçonnage, forage ou fraisage correct
2. Ebavurage (si nécessaire)
3. Enlèvement des poussières et des copeaux
4. Dégraissage avec Reynafinish 60, art. nr. 086.9210.--
5. Application de Reynaprotector, art. nr. 086.9209.--

Drainage

SEQUENCE
1. Correct punching, drilling or milling
2. Deburring (if necessary)
3. Removing dust and saw-dust
4. Degreasing with Reynafinish 60, art. nr. 086.9210.--
5. Applying Reynaprotector, art. nr. 086.9209.--

Entwässerung

REIHENFOLGE
1. Stanzen, bohren oder fräsen
2. Entgraten (falls erforderlich)
3. Staub und Sägereste entfernen
4. Entfetten mit Reynafinish 60, art. nr. 086.9210.--
5. Reynaprotector aufbringen, art. nr. 086.9209.--

F

D0081610

CS 68-FP
EW 30

ONTWATERING KADER RAMEN NAAR BINNENDRAAIEND
DRAINAGE DORMANT FENETRES OUVRANT VERS L'INTERIEUR
DRAINAGE OUTER FRAME INWARD OPENING WINDOWS
ENTWAESSERUNG BLENDRAHMEN FENSTER NACH INNEN OEFFNEND

---	---	---	005.1100.XX 005.1109.XX 005.1110.XX

---		---	
		*097.0381.00	
		SBZ 140	

---	---	---	005.0420.XX 005.0446.XX 005.0447.XX 005.0448.XX 005.0449.XX 005.0452.XX 005.1455.XX 005.1456.XX

---		---	
		*097.0381.00	
		SBZ 140	

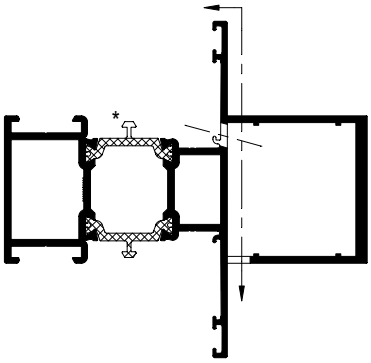

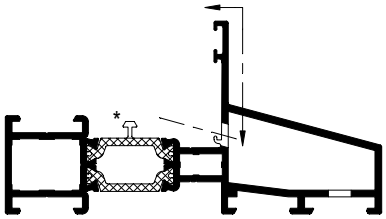

F

*enkel bij vast raam
*seulement pour fenêtre fixe
*only for fixed window
*nur bei festverglasung

D0081611

CS 68-FP
EW 30

ONTWATERING VLEUGEL RAMEN NAAR BINNENDRAAIEND
DRAINAGE OUVRANT VERS L'INTERIEUR
DRAINAGE VENT WINDOWS INWARD OPENING
ENTWAESSERUNG FLUEGEL FENSTER NACH INNEN OEFFNEND

				005.0102.XX 005.0112.XX 005.0121.XX 005.0192.XX 005.0202.XX 005.0203.XX 005.0221.XX 005.0251.XX 005.0252.XX 005.0292.XX 005.1521.XX
	095.C500.00		097.Q300.00	

	---		---	
			*097.0381.00	

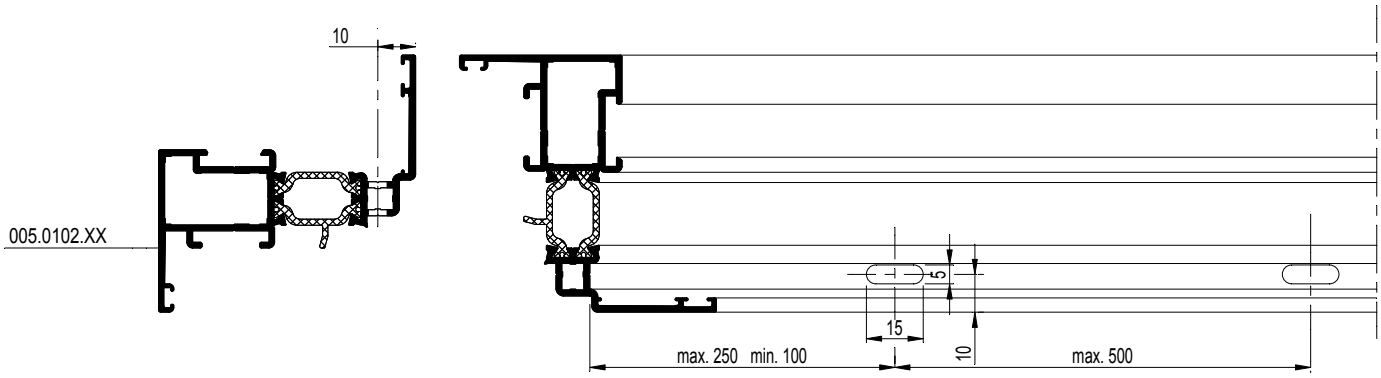

Ontwatering

VOLGORDE
1. Correct ponsen, boren of frezen
2. Ontbramen (Indien noodzakelijk)
3. Stof en zaagresten verwijderen
4. Ontvetten met Reynafinish 60, art. nr. 086.9210.--
5. Reynaprotector aanbrengen, art. nr. 086.9209.--

Drainage

ORDRE
1. Poinçonnage, forage ou fraisage correct
2. Ebavurage (si nécessaire)
3. Enlèvement des poussières et des copeaux
4. Dégraissage avec Reynafinish 60, art. nr. 086.9210.--
5. Application de Reynaprotector, art. nr. 086.9209.--

Drainage

SEQUENCE
1. Correct punching, drilling or milling
2. Deburring (if necessary)
3. Removing dust and saw-dust
4. Degreasing with Reynafinish 60, art. nr. 086.9210.--
5. Applying Reynaprotector, art. nr. 086.9209.--

Entwässerung

REIHENFOLGE
1. Stanzen, bohren oder fräsen
2. Entgraten (falls erforderlich)
3. Staub und Sägereste entfernen
4. Entfetten mit Reynafinish 60, art. nr. 086.9210.--
5. Reynaprotector aufbringen, art. nr. 086.9209.--

F

D0081611

CS 68-FP
EW 30

ONTWATERING OMKEERKADER
DRAINAGE PROFILE INVERSION
DRAINAGE CHANGEOVER PROFILE
ENTWAESSERUNG WECHSELPROFIL

---	---	---	005.1101.XX	030.3606.XX 030.3644.XX 030.3645.XX

---		---		

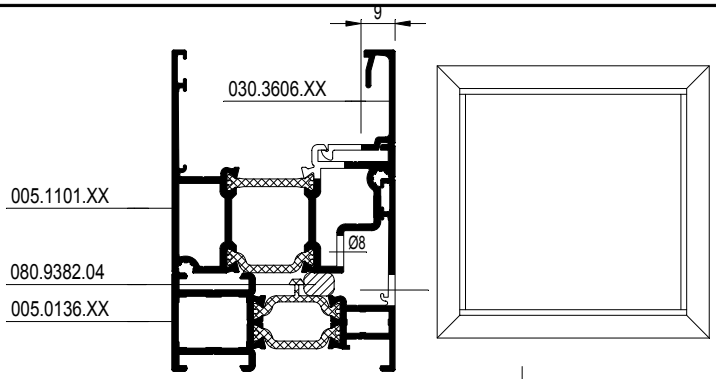

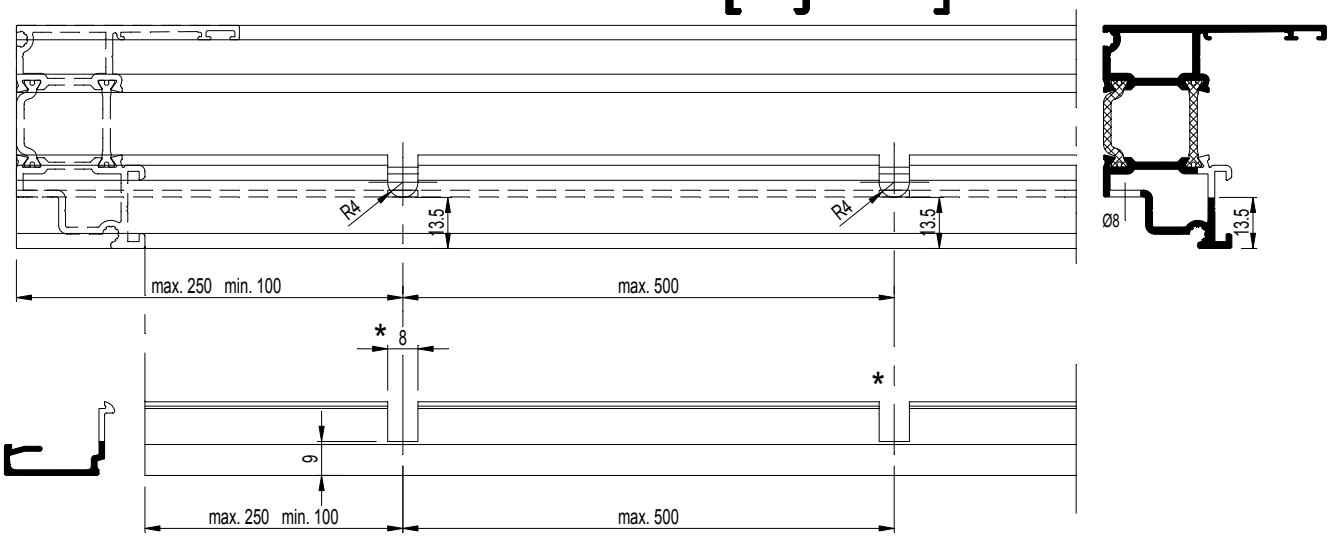

* De uitfrezingen voor ontwatering van de glaslat dienen recht boven de ontwateringsgaten van de kader te gebeuren.
Le poinçonnage pour le drainge de la parclose doit être positionné juste au-dessous des trous de drainage du dormant
The drilling for the glazing bead drainage must be done straight above the drainage holes of the outer frame.
Die Ausfräsung für die Entwässerung der Glasleiste soll genau über den Entwässerungslöcher des Blendrahmens positioniert sein

F

D0081612

Ontwatering

VOLGORDE
1. Correct ponsen, boren of frezen
2. Ontbramen (indien noodzakelijk)
3. Stof en zaagresten verwijderen
4. Ontvetten met Reynafinish 60, art. nr. 086.9210.--
5. Reynaprotector aanbrengen, art. nr. 086.9209.--

Drainage

ORDRE
1. Poinçonnage, forage ou fraisage correct
2. Ebavurage (si nécessaire)
3. Enlèvement de poussières et de copeaux
4. Dégraissage avec Reynafinish 60, art. nr. 086.9210.--
5. Application de Reynaprotector, art. nr. 086.9209.--

Drainage

SEQUENCE
1. Correct punching, drilling or milling
2. Deburring (if necessary)
3. Removing dust and saw-dust
4. Degreasing with Reynafinish 60, art. nr. 086.9210.--
5. Applying Reynaprotector, art. nr. 086.9209.--

Entwässerung

REIHENFOLGE
1. Stanzen, bohren oder fräsen
2. Entgraten (falls erforderlich)
3. Staub und Sägereste entfernen
4. Entfetten mit Reynafinish 60, art. nr. 086.9210.--
5. Reynaprotector aufbringen, art. nr. 086.9209.--

VERBORGEN ONTWATERING
DRAINAGE CACHE
HIDDEN DRAINAGE
VERDECKTE ENTWAESSERUNG

---	---	---	005.0125.XX 005.0136.XX 005.0140.XX 005.0183.XX 005.0525.XX

---		---	

		SBZ 122 SBZ 140	

*enkel bij vast raam
*seulement pour fenêtre fixe
*only for fixed window
*nur bei festverglasung

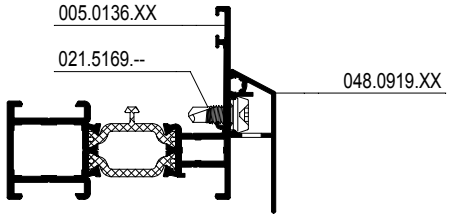

SBZ 122 - SBZ 140

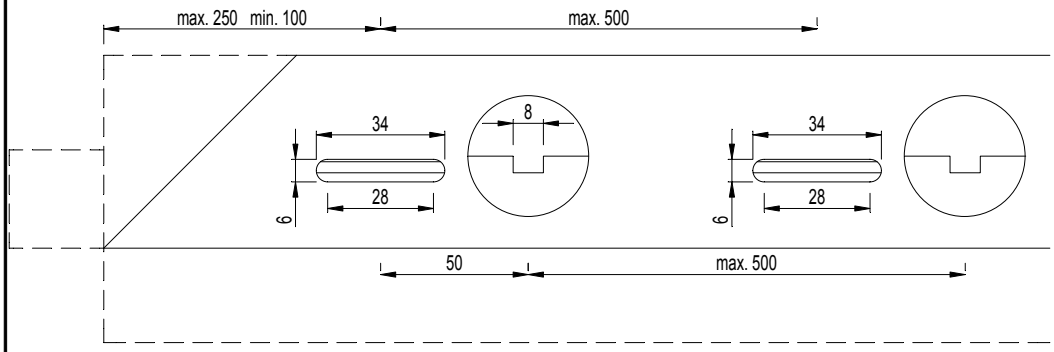

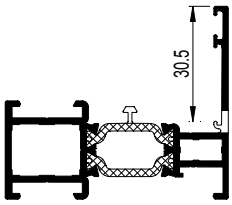

---	---	---	048.0919.XX

---		---	

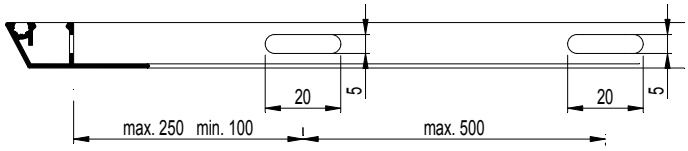

Ontwatering

VOLGORDE
1. Correct ponsen, boren of frezen
2. Ontbramen (Indien noodzakelijk)
3. Stof en zaagresten verwijderen
4. Ontvetten met Reynafinish 60, art. nr. 086.9210.--
5. Reynaprotector aanbrengen, art. nr. 086.9209.--

Drainage

ORDRE
1. Poinçonnage, forage ou fraisage correct
2. Ebavurage (si nécessaire)
3. Enlèvement des poussières et des copeaux
4. Dégraissage avec Reynafinish 60, art. nr. 086.9210.--
5. Application de Reynaprotector, art. nr. 086.9209.--

Drainage

SEQUENCE
1. Correct punching, drilling or milling
2. Deburring (if necessary)
3. Removing dust and saw-dust
4. Degreasing with Reynafinish 60, art. nr. 086.9210.--
5. Applying Reynaprotector, art. nr. 086.9209.--

Entwässerung

REIHENFOLGE
1. Stanzen, bohren oder fräsen
2. Entgraten (falls erforderlich)
3. Staub und Sägereste entfernen
4. Entfetten mit Reynafinish 60, art. nr. 086.9210.--
5. Reynaprotector aufbringen, art. nr. 086.9209.--

F

D0081613

VERBORGEN ONTWATERING
DRAINAGE CACHE
HIDDEN DRAINAGE
VERDECKTE ENTWAESSERUNG

	---		---	008.0514.XX 008.0540.XX 005.0438.XX 005.2439.XX

	---		---	

			--- ---	

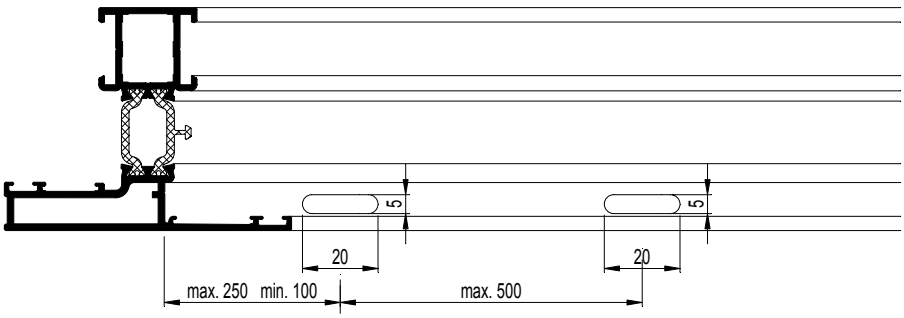

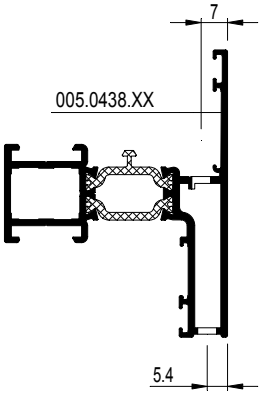

F

D0081613

ONTWATERING RAAMDEUREN NAAR BINNENDRAAIEND
DRAINAGE PORTES-FENETRES OUVRANT VERS L'INT.
DRAINAGE WINDOW-DOORS INWARD OPENING
ENTWAESSERUNG FENSTERTUEREN NACH INNEN OEFFNEND

D0081616

ONTWATERING RAAMDEUREN NAAR BINNENDRAAIEND
DRAINAGE PORTES-FENETRES OUVRANT VERS L'INT.
DRAINAGE WINDOW-DOORS INWARD OPENING
ENTWAESSERUNG FENSTERTUEREN NACH INNEN OEFFNEND

095.C500.00		---	005.1521.XX 005.0121.XX
		097.P900.00	
---		---	
		097.0373.00	

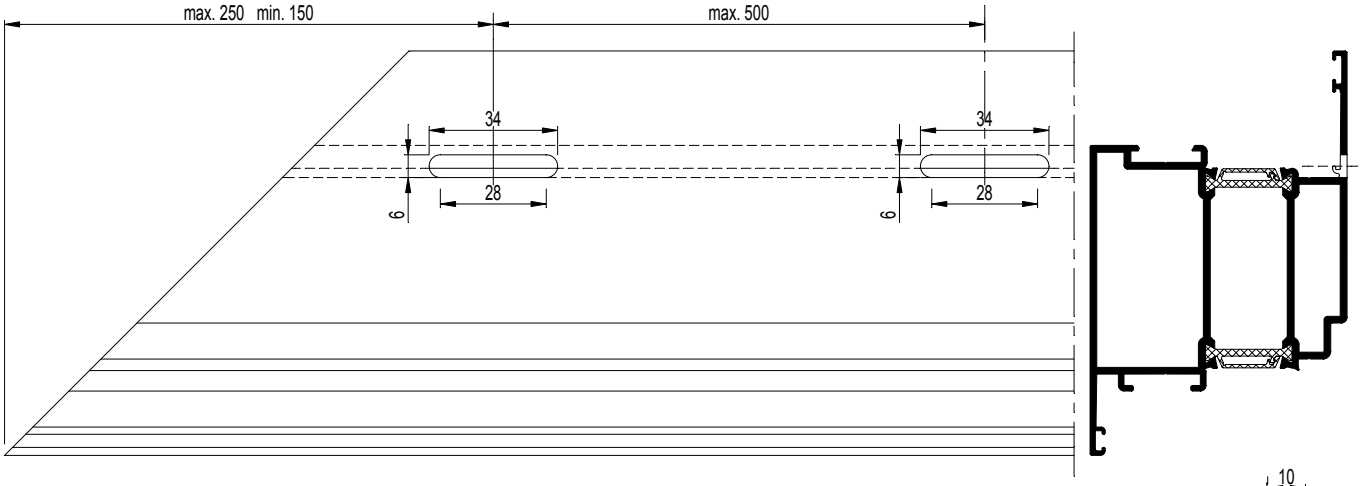

095.C500.00		097.Q300.00	005.1521.XX 005.0121.XX

---		---	

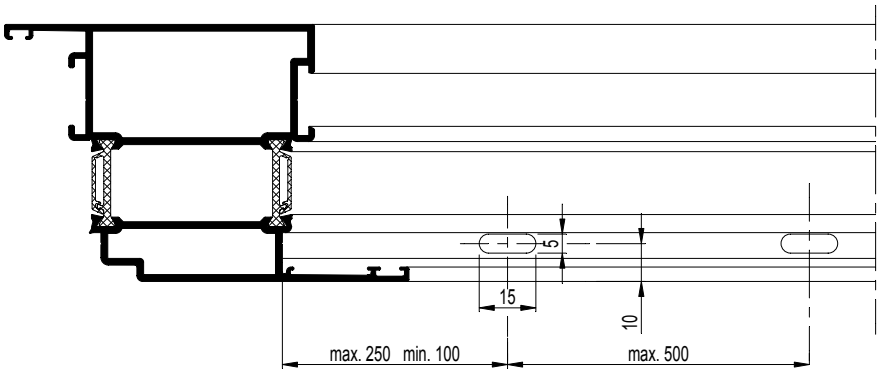

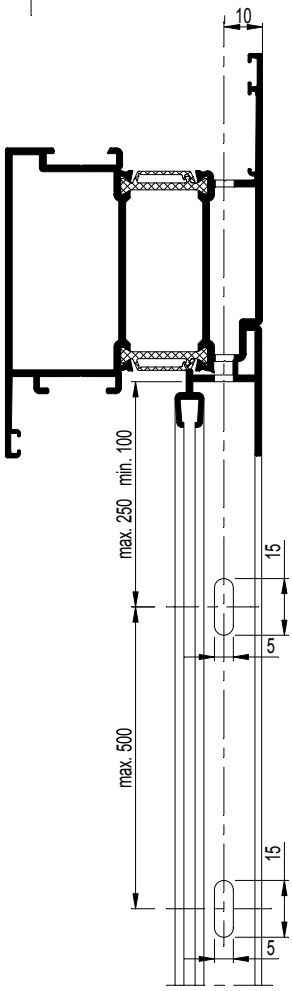

D0081616

F

CS 68-FP
EW 30

ONTWATERING RAAMDEUREN NAAR BUITENDRAAIEND
DRAINAGE PORTES-FENETRES OUVRANT VERS L'EXT.
DRAINAGE WINDOW-DOORS OUTWARD OPENING
ENTWAESSERUNG FENSTERTUEREN NACH AUSSEN OEFFNEND

				005.0221.XX 005.0252.XX
	095.C500.00		097.Q300.00	

	---		---	

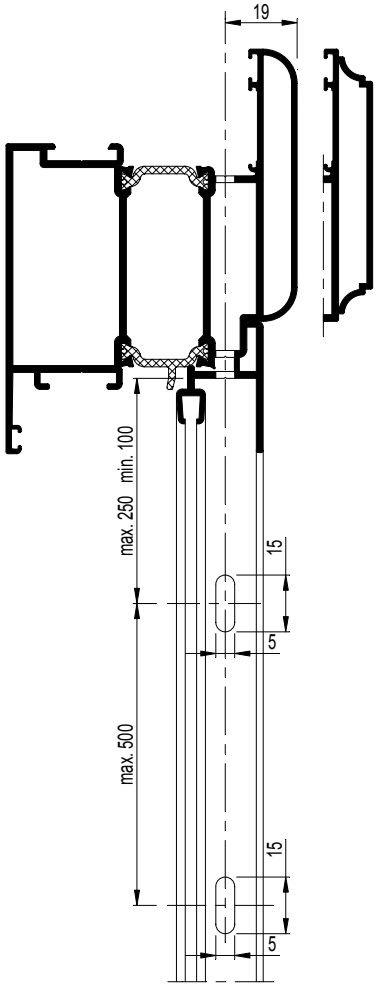

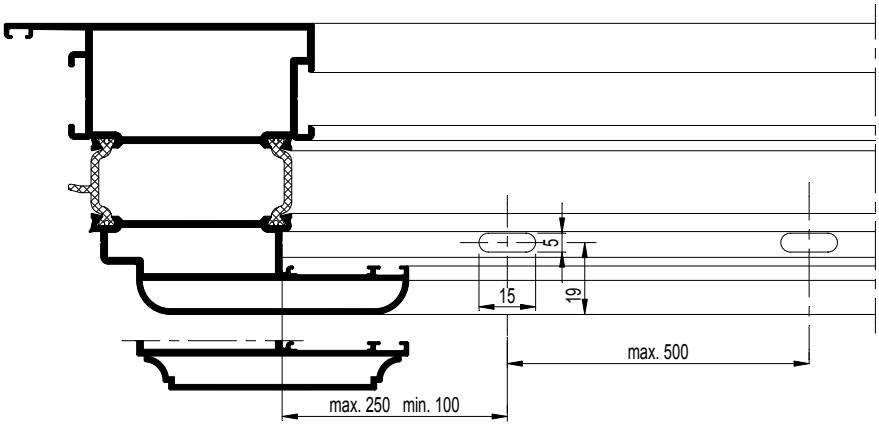

Ontwatering

VOLGORDE
1. Correct ponsen, boren of frezen
2. Ontbramen (Indien noodzakelijk)
3. Stof en zaagresten verwijderen
4. Ontvetten met Reynafinish 60, art. nr. 086.9210.--
5. Reynaprotector aanbrengen, art. nr. 086.9209.--

Drainage

ORDRE
1. Poinçonnage, forage ou fraisage correct
2. Ebavurage (si nécessaire)
3. Enlèvement des poussières et des copeaux
4. Dégraissage avec Reynafinish 60, art. nr. 086.9210.--
5. Application de Reynaprotector, art. nr. 086.9209.--

Drainage

SEQUENCE
1. Correct punching, drilling or milling
2. Deburring (if necessary)
3. Removing dust and saw-dust
4. Degreasing with Reynafinish 60, art. nr. 086.9210.--
5. Applying Reynaprotector, art. nr. 086.9209.--

Entwässerung

REIHENFOLGE
1. Stanzen, bohren oder fräsen
2. Entgraten (falls erforderlich)
3. Staub und Sägereste entfernen
4. Entfetten mit Reynafinish 60, art. nr. 086.9210.--
5. Reynaprotector aufbringen, art. nr. 086.9209.--

F

D0081618

ONTWATERING RAAMDEUREN NAAR BUITENDRAAIEND
DRAINAGE PORTES-FENETRES OUVRANT VERS L'EXT.
DRAINAGE WINDOW-DOORS OUTWARD OPENING
ENTWAESSERUNG FENSTERTUEREN NACH AUSSEN OEFFNEND

				005.0052.XX
	095.C500.00		095.C600.00	
			097.P900.00	
	---		---	
			097.0373.00	
			SBZ 122 SBZ 140	

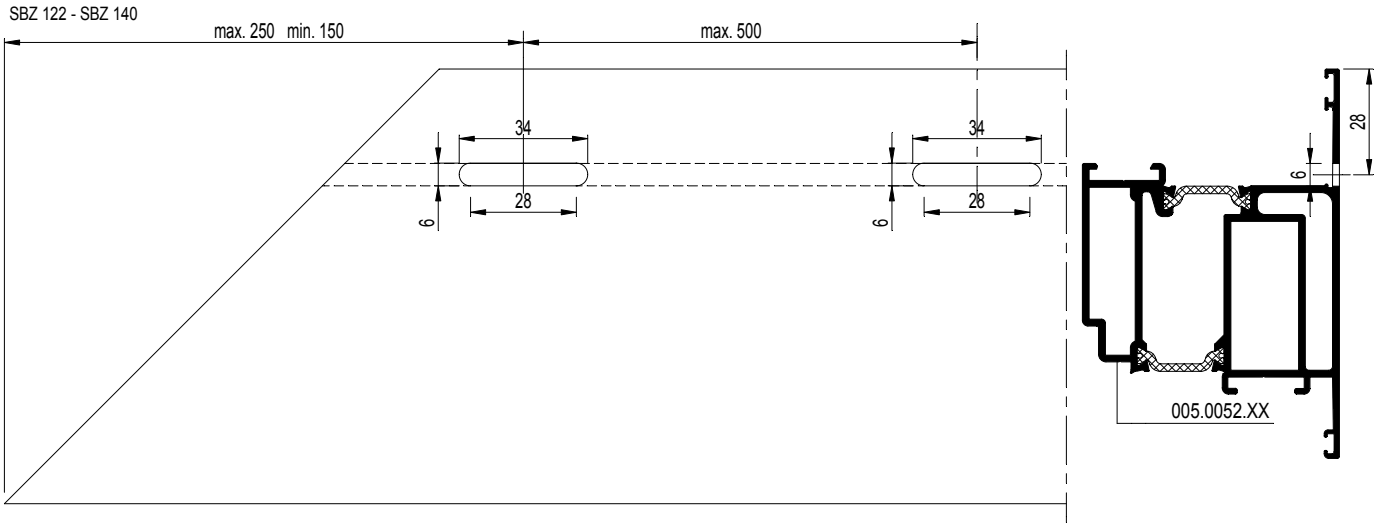

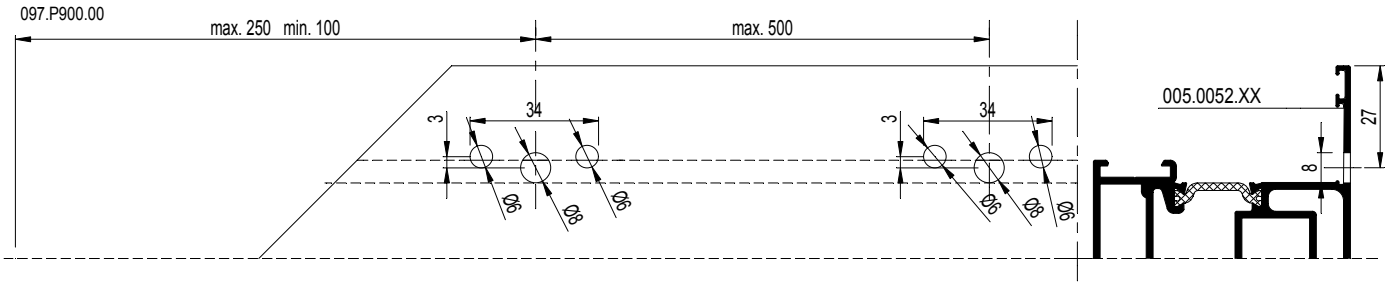

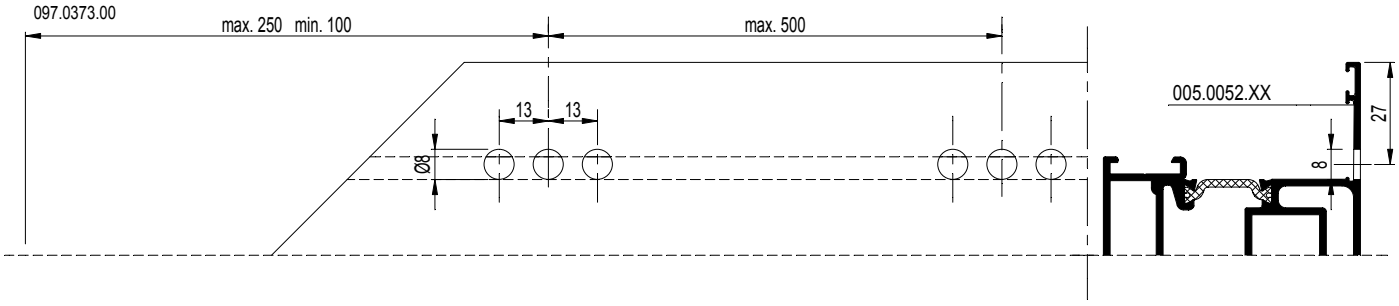

F

D0081618

ONTWATERING RAAMDEUREN NAAR BUITENDRAAIEND
DRAINAGE PORTES-FENETRES OUVRANT VERS L'EXT.
DRAINAGE WINDOW-DOORS OUTWARD OPENING
ENTWAESSERUNG FENSTERTUEREN NACH AUSSEN OEFFNEND

D0081620

ONTWATERING RAAMDEUREN NAAR BUITENDRAAIEND
DRAINAGE PORTES-FENETRES OUVRANT VERS L'EXT.
DRAINAGE WINDOW-DOORS OUTWARD OPENING
ENTWAESSERUNG FENSTERTUEREN NACH AUSSEN OEFFNEND

				005.0152.XX
	---		---	

	---		---	

			SBZ 122 SBZ 140	

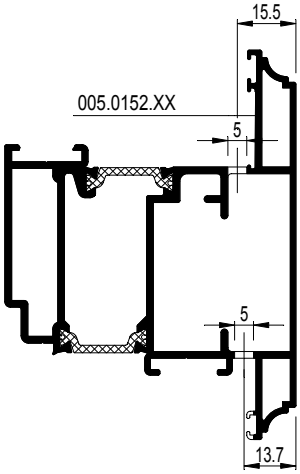

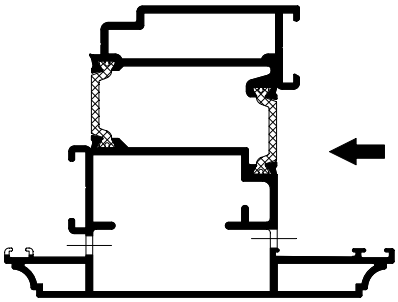

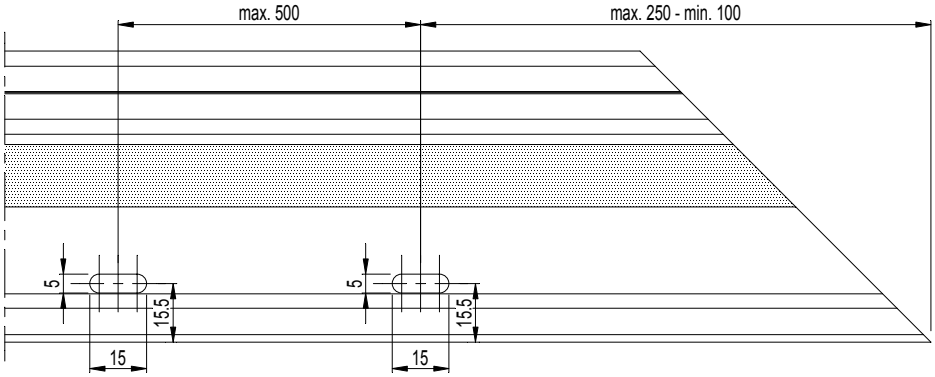

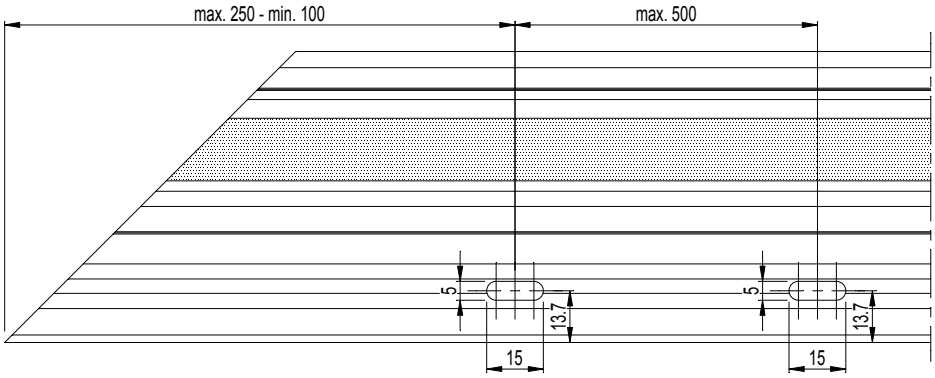

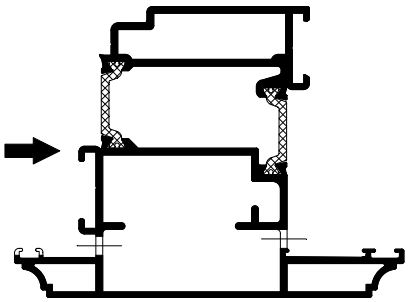

F

D0081620

CS 68-FP
EW 30

ONTWATERING DEURVLEUGEL
DRAINAGE OUVRANT DE PORTE
DRAINAGE DOOR VENT
ENTWAESSERUNG TUERFLEUGEL

				005.1016.XX 005.3014.XX 005.3026.XX
	---		---	

	---		---	
	---		---	

			SBZ 122 SBZ 140	

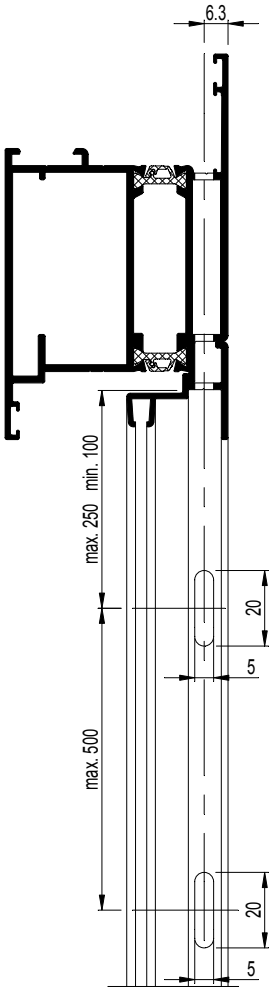

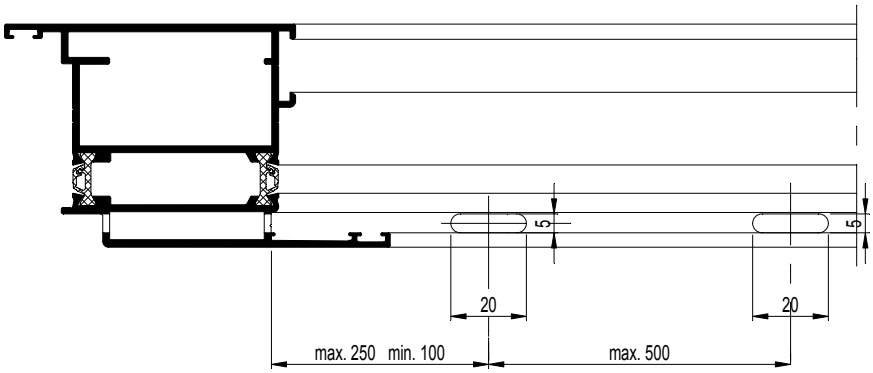

F

schaal - échelle
scale - Maßstab
1/2

D0081621

ONTWATERING DEURVLEUGEL
DRAINAGE OUVRANT DE PORTE
DRAINAGE DOOR VENT
ENTWAESSERUNG TUERFLEUGEL

				005.1016.XX 005.3014.XX 005.3026.XX
	095.C500.00		095.C600.00	
			097.P900.00	
	095.C700.00		097.P900.00	
	---		---	
			097.0658.00	
			SBZ 122 SBZ 140	

097.P900.00

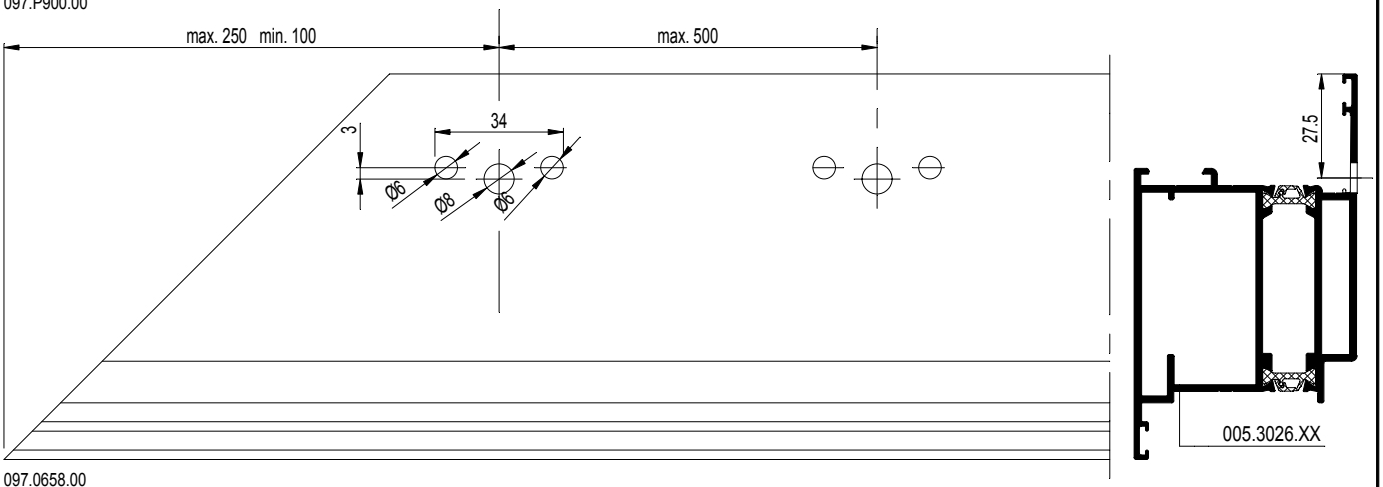

097.0658.00

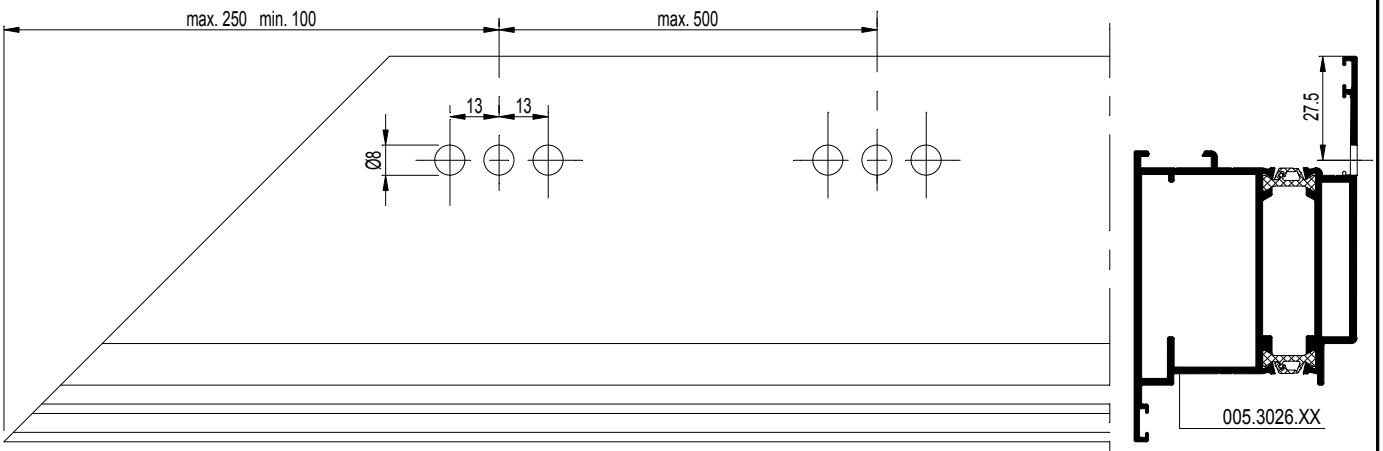

SBZ 122 - SBZ 140

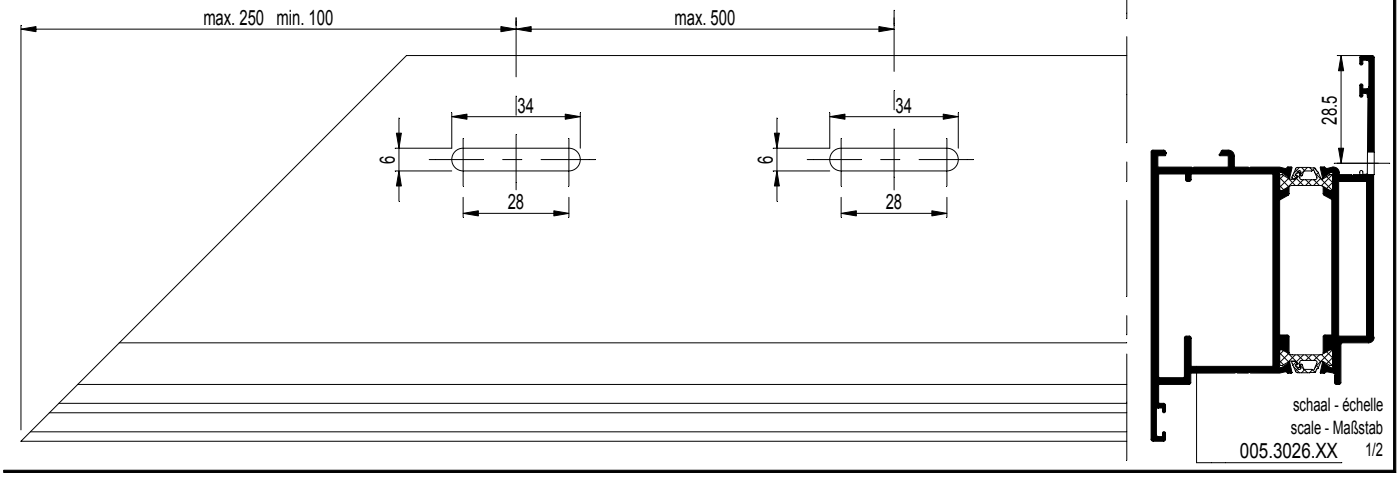

schaal - échelle
scale - Maßstab
1/2

D0081621

F

ONTWATERING 'BODEMPROFIEL 150Pa'
DRAINAGE 'PROFILE DE SEUIL 150Pa'
DRAINAGE 'FLOOR PROFILE 150Pa'
ENTWAESSERUNG 'SCHWELLE 150Pa'

				005.0874.XX
	---		---	

	---		---	
	---		---	

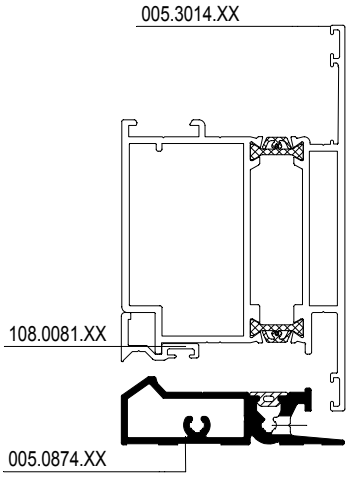

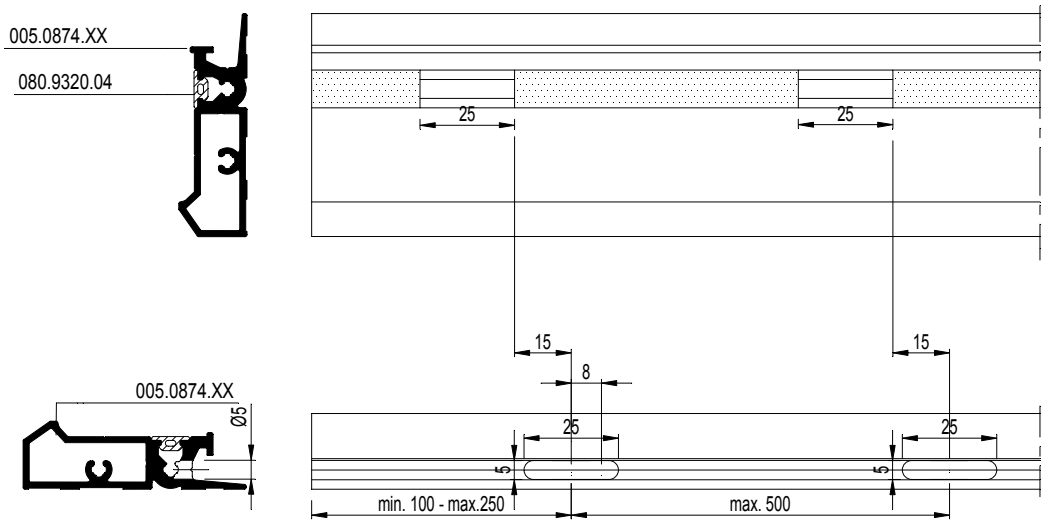

F

D0081622

ONTWATERING 'BODEMPROFIEL 150Pa'
DRAINAGE 'PROFILE DE SEUIL 150Pa'
DRAINAGE 'FLOOR PROFILE 150Pa'
ENTWAESSERUNG 'SCHWELLE 150Pa'

				005.0873.XX
	---		---	

	---		---	
	---		---	

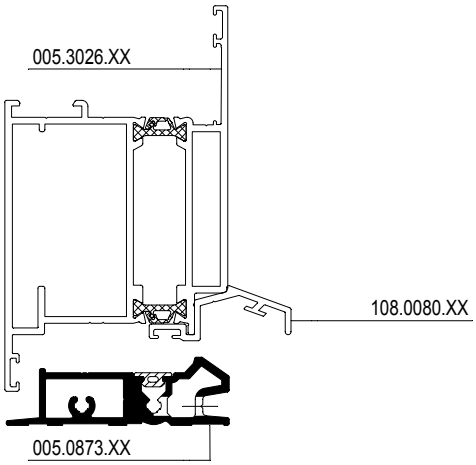

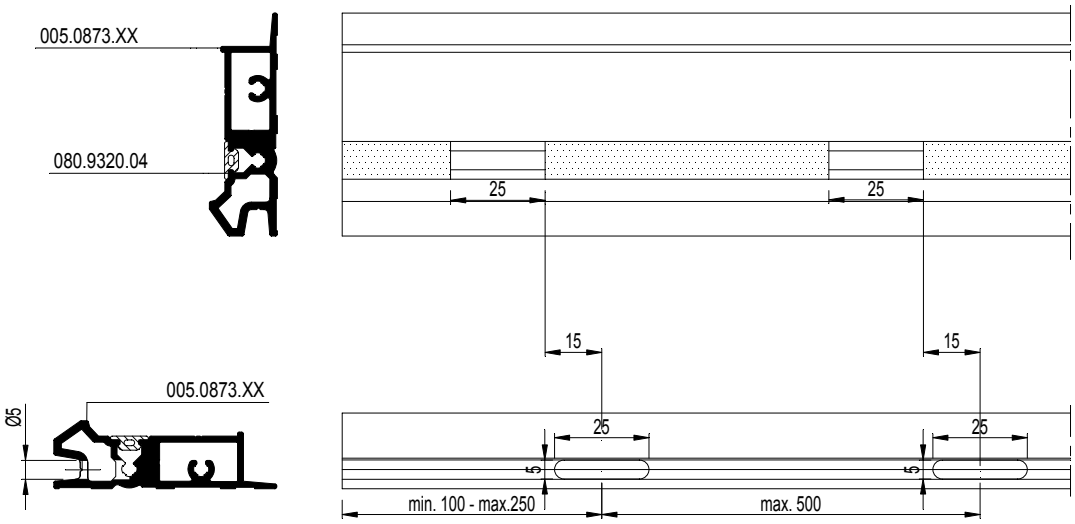

Ontwatering

VOLGORDE
1. Correct ponsen, boren of frezen
2. Ontbramen (Indien noodzakelijk)
3. Stof en zaagresten verwijderen
4. Ontvetten met Reynafinish 60, art. nr. 086.9210.--
5. Reynaprotector aanbrengen, art. nr. 086.9209.--

Drainage

ORDRE
1. Poinçonnage, forage ou fraisage correct
2. Ebavurage (si nécessaire)
3. Enlèvement des poussières et des copeaux
4. Dégraissage avec Reynafinish 60, art. nr. 086.9210.--
5. Application de Reynaprotector, art. nr. 086.9209.--

Drainage

SEQUENCE
1. Correct punching, drilling or milling
2. Deburring (if necessary)
3. Removing dust and saw-dust
4. Degreasing with Reynafinish 60, art. nr. 086.9210.--
5. Applying Reynaprotector, art. nr. 086.9209.--

Entwässerung

REIHENFOLGE
1. Stanzen, bohren oder fräsen
2. Entgraten (falls erforderlich)
3. Staub und Sägereste entfernen
4. Entfetten mit Reynafinish 60, art. nr. 086.9210.--
5. Reynaprotector aufbringen, art. nr. 086.9209.--

schaal - échelle
scale - Maßstab
1/2

D0081622

F

DECOMPRESSIE
DECOMPRESSION
DECOMPRESSION
DEKOMPRESSION

DECOMPRESSIE Ø5 IN DE VLEUGEL
DECOMPRESSION Ø5 DANS L' OUVRANT
DECOMPRESSION Ø5 IN THE VENT
DEKOMPRESSION Ø5 IM FLÜGEL

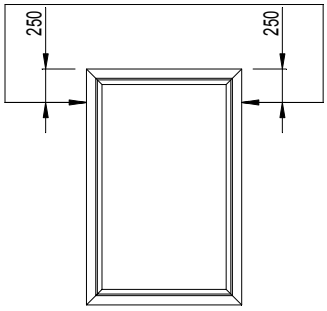

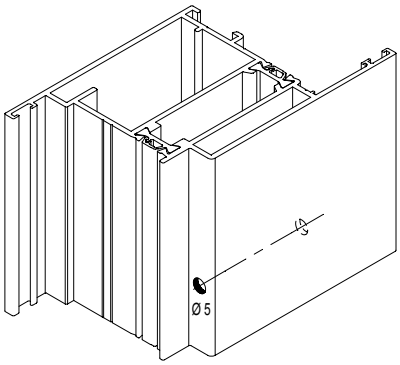

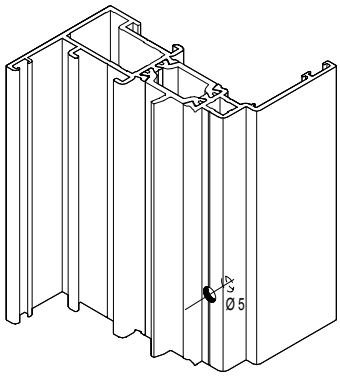

DECOMPRESSIE IN VAST RAAM
DECOMPRESSION DANS CHASSIS FIXE
DECOMPRESSION IN FIXED WINDOW
DEKOMPRESSION IN DER FESTVERGLASUNG

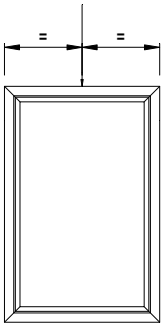

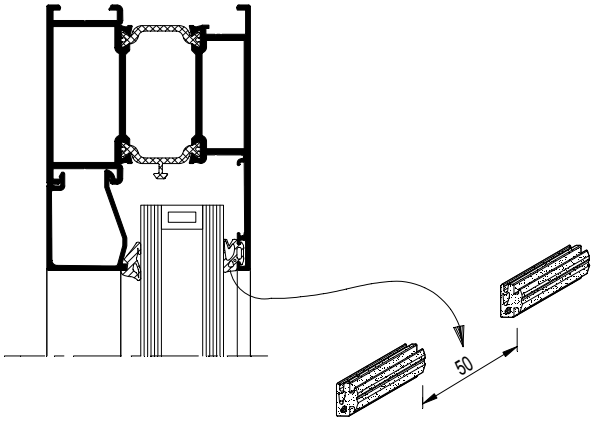

F

D0081623

DECOMPRESSIE Ø5 IN VAST RAAM (005.0139.XX)
DECOMPRESSION Ø5 DANS CHASSIS FIXE (005.0139.XX)
DECOMPRESSION Ø5 IN FIXED WINDOW (005.0139.XX)
DEKOMPRESSION Ø5 IN DER FESTVERGLASUNG (005.0139.XX)

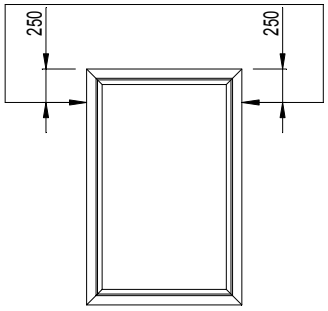

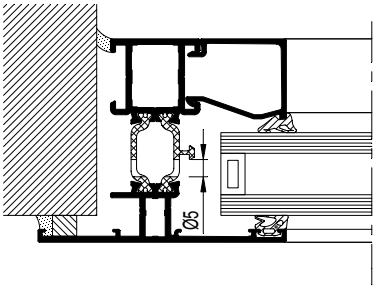

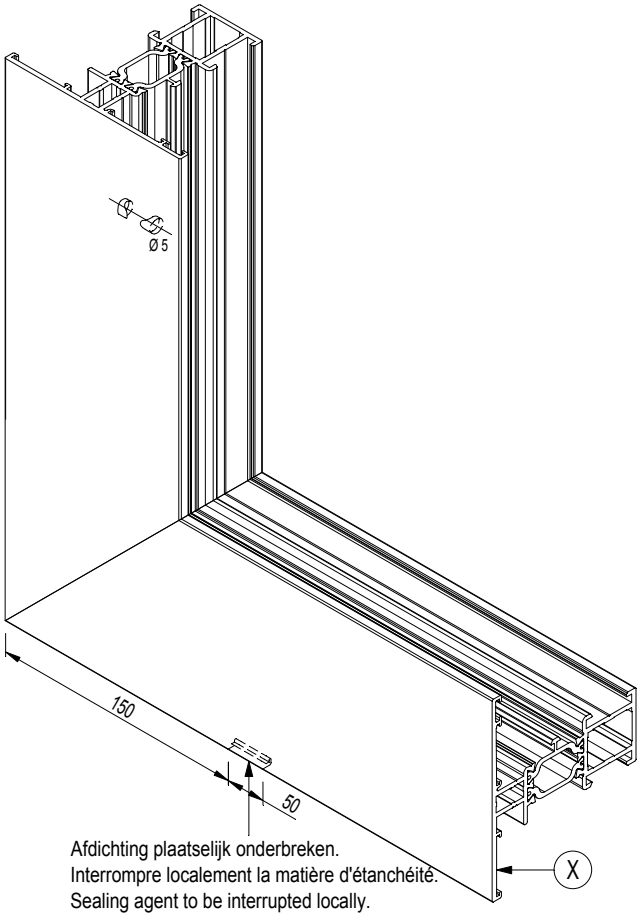

Afdichting plaatselijk onderbreken.
Interrompre localement la matière d'étanchéité.
Sealing agent to be interrupted locally.
Abdichtung unterbrechen.

X DICHTINGSMIDDEL
MATIERE D'ETANCHEITE
SEALING AGENT
ABDICHTUNG

F

D0081623

CS 68-FP

EW 30

T-VERBINDER MET SCHROEF EN/OF NAGEL NAAR BINNENDRAAIEND
JONCTION-T AVEC VIS ET/OU CHEVILLE OUVRANT VERS L'INTERIEUR
T-BRACKET WITH SCREW AND/OR DRIVE PIN OPENING INWARD
T-VERBINDER MIT SCHRAUBE UND/ODER STIFT N. INNEN OEFFNEND

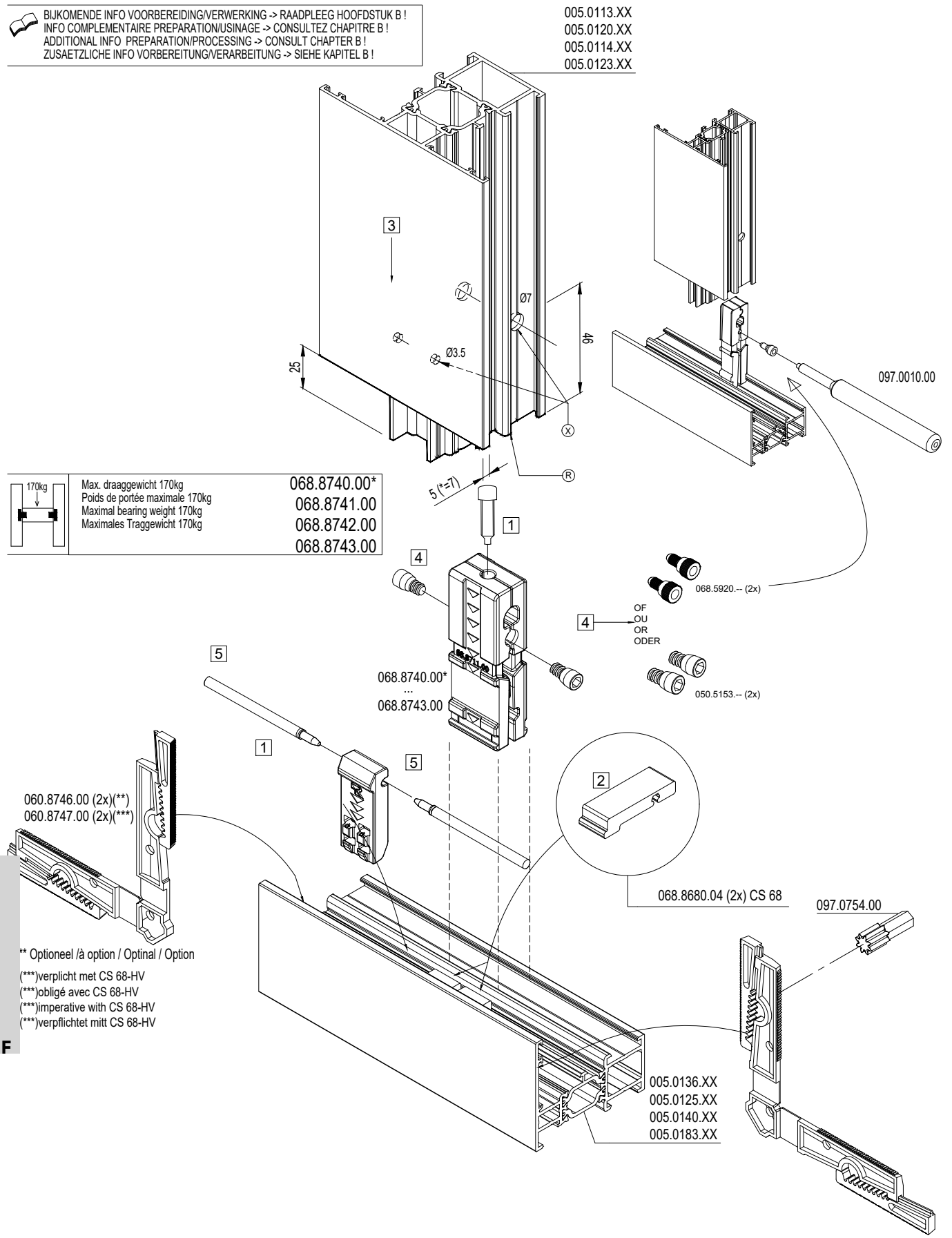

F

CS 68-FP
EW 30

T-VERBINDER MET SCHROEF EN/OF NAGEL NAAR BINNENDRAAIEND
JONCTION-T AVEC VIS ET/OU CHEVILLE OUVRANT VERS L'INTERIEUR
T-BRACKET WITH SCREW AND/OR DRIVE PIN OPENING INWARD
T-VERBINDER MIT SCHRAUBE UND/ODER STIFT N. INNEN OEFFNEND

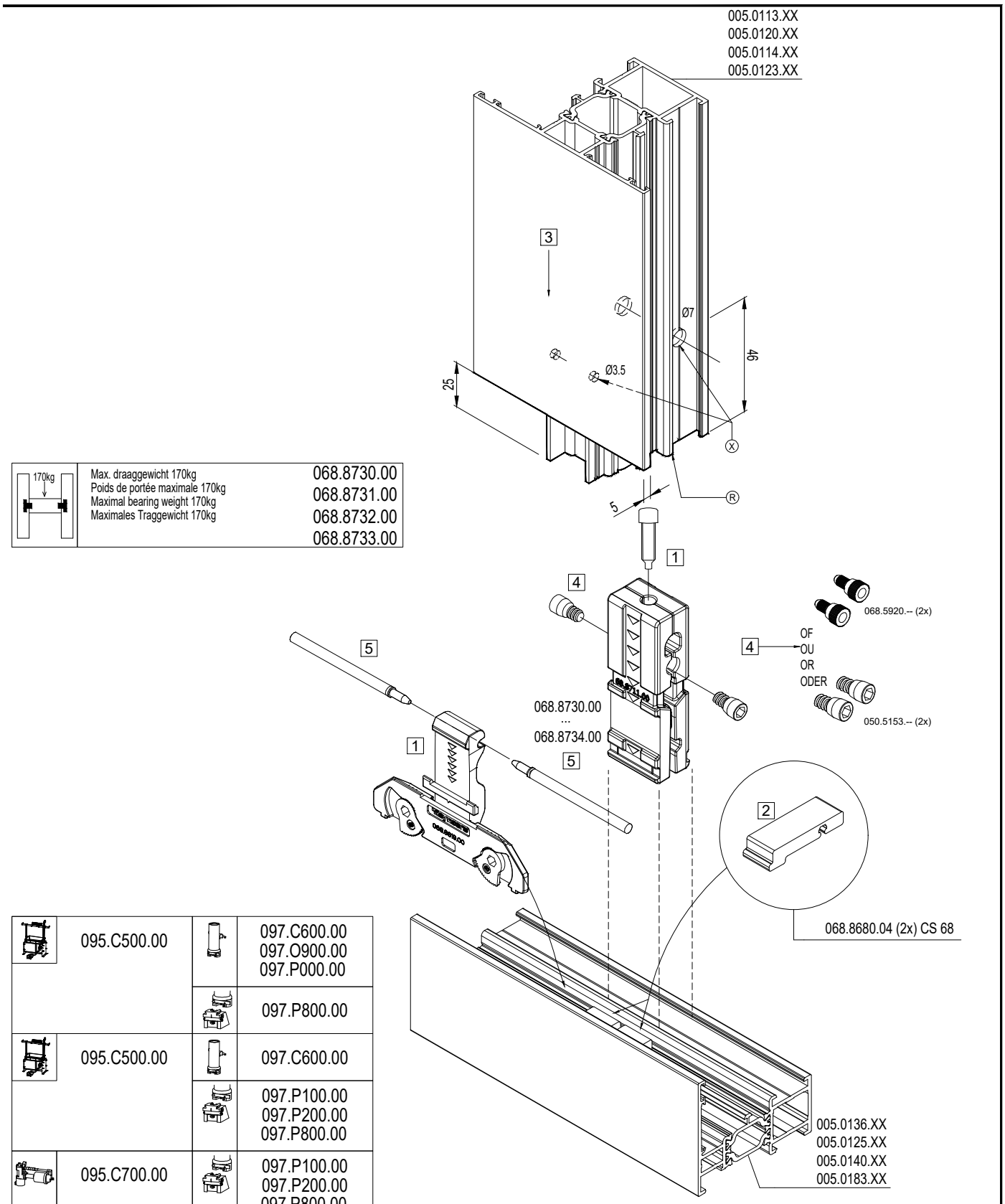

095.C500.00	097.C600.00 097.O900.00 097.P000.00
	097.P800.00
095.C500.00	097.C600.00
	097.P100.00 097.P200.00 097.P800.00
095.C700.00	097.P100.00 097.P200.00 097.P800.00
097.0082.00	097.F800.00
---	---
	097.0374.00

X	DICHTINGSMIDDEL MATIERE D'ETANCHEITE SEALING AGENT ABDICHTUNG
R	REYNAPROTECTOR REYNAPROTECTOR REYNAPROTECTOR REYNAPROTECTOR

MONTAGEVOLGORDE
L 'ORDRE DE MONTAGE
THE ORDER OF ASSEMBLY
MONTAGEREIHENFOLGE
1 2 3 .

F

CS 68-FP
EW 30

T-VERBINDER MET SCHROEF EN/OF NAGEL NAAR BUITENDRAAIEND
JONCTION-T AVEC VIS ET/OU CHEVILLE OUVRANT VERS L'EXTERIEUR
T-BRACKET WITH SCREW AND/OR DRIVE PIN OPENING OUTWARD
T-VERBINDER MIT SCHRAUBE UND/ODER STIFT N. AUSSEN OEFFNEND

068.8730.00 of - ou - or - oder 068.8740.00*	068.8731.00 of - ou - or - oder 068.8741.00	068.8732.00 of - ou - or - oder 068.8742.00	068.8733.00 of - ou - or - oder 068.8743.00
005.0113.XX	005.0111.XX	005.0114.XX	005.0123.XX
005.0136.XX	005.0120.XX	005.0125.XX	005.0140.XX
005.0139.XX	005.0183.XX	005.0144.XX	
005.0141.XX	005.0258.XX	005.0525.XX	
005.0446.XX	005.0420.XX	005.0544.XX	
005.0447.XX	005.0448.XX		
	005.0449.XX		
	005.0540.XX		
	005.1100.XX		
	005.1109.XX		
	005.1110.XX		
	005.1455.XX		
	005.1456.XX		

CS 68-FP
EW 30

T-VERBINDER MET SCHROEF EN/OF NAGEL NAAR BUITENDRAAIEND
JONCTION-T AVEC VIS ET/OU CHEVILLE OUVRANT VERS L'EXTERIEUR
T-BRACKET WITH SCREW AND/OR DRIVE PIN OPENING OUTWARD
T-VERBINDER MIT SCHRAUBE UND/ODER STIFT N. AUSSEN OEFFNEND

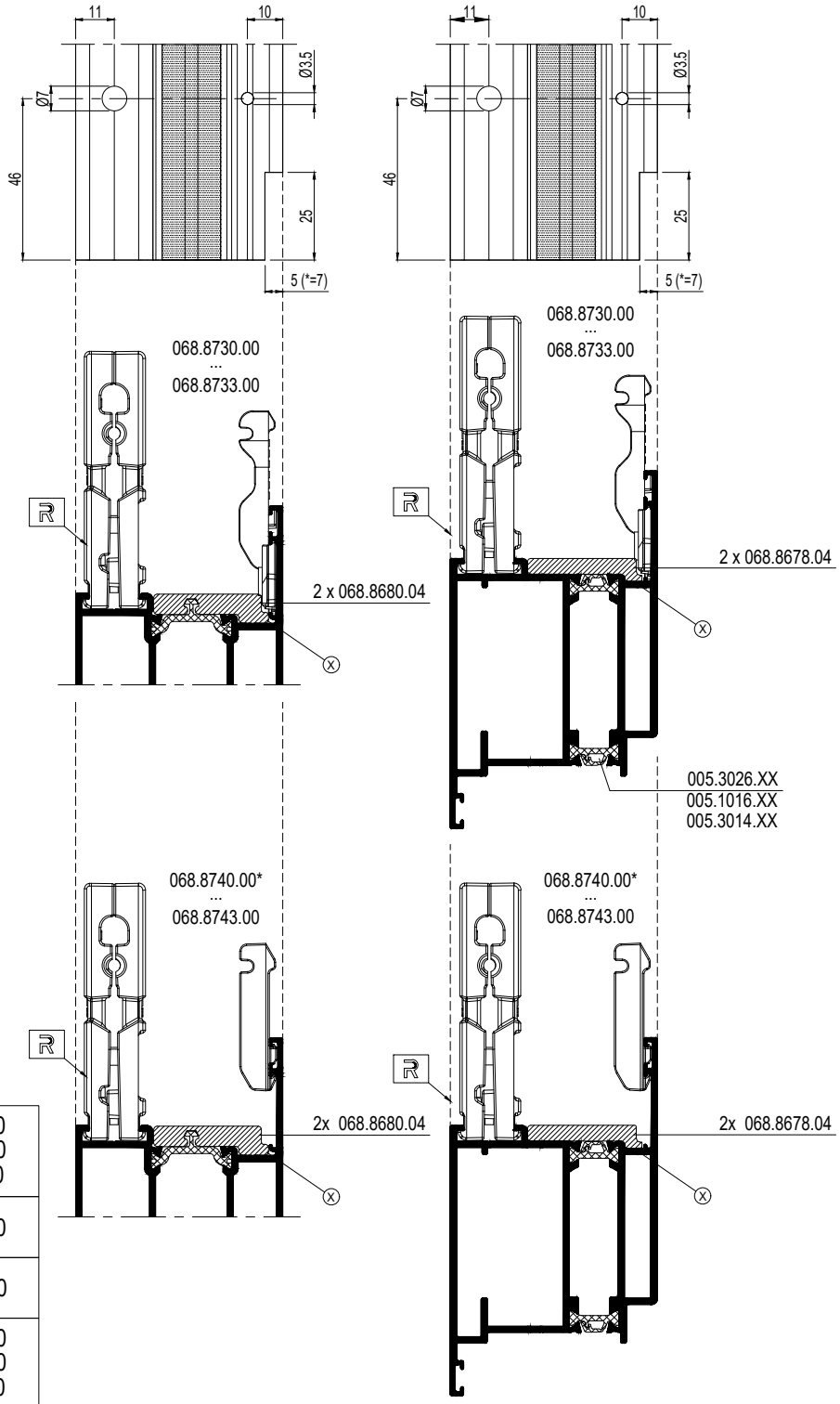

	095.C500.00		095.C600.00 097.O900.00 097.P000.00
			097.P800.00
	095.C500.00		095.C600.00
			097.P100.00 097.P200.00 097.P800.00
	095.C700.00		097.P100.00 097.P200.00 097.P800.00
	097.0082.00		097.F800.00
	---		---
			097.0374.00

X DICHTINGSMIDDEL
MATIERE D'ETANCHEITE
SEALING AGENT
ABDICHTUNG

F

T-VERBINDER MET SCHROEF EN/OF NAGEL NAAR BINNENDRAAIEND
JONCTION-T AVEC VIS ET/OU CHEVILLE OUVRANT VERS L'INTERIEUR
T-BRACKET WITH SCREW AND/OR DRIVE PIN OPENING INWARD
T-VERBINDER MIT SCHRAUBE UND/ODER STIFT N. INNEN OEFFNEND

D0081632

CS 68-FP
EW 30

T-VERBINDER MET SCHROEF EN/OF NAGEL NAAR BINNENDRAAIEND
JONCTION-T AVEC VIS ET/OU CHEVILLE OUVRANT VERS L'INTERIEUR
T-BRACKET WITH SCREW AND/OR DRIVE PIN OPENING INWARD
T-VERBINDER MIT SCHRAUBE UND/ODER STIFT N. INNEN OEFFNEND

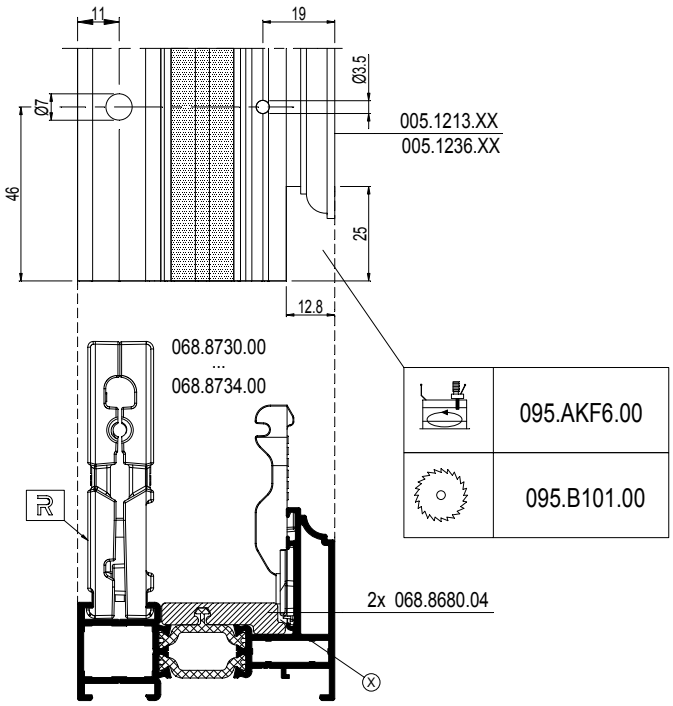

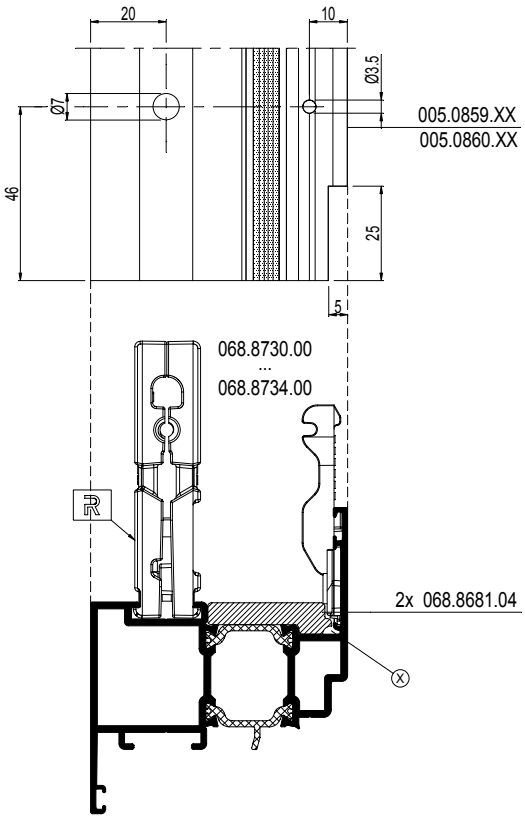

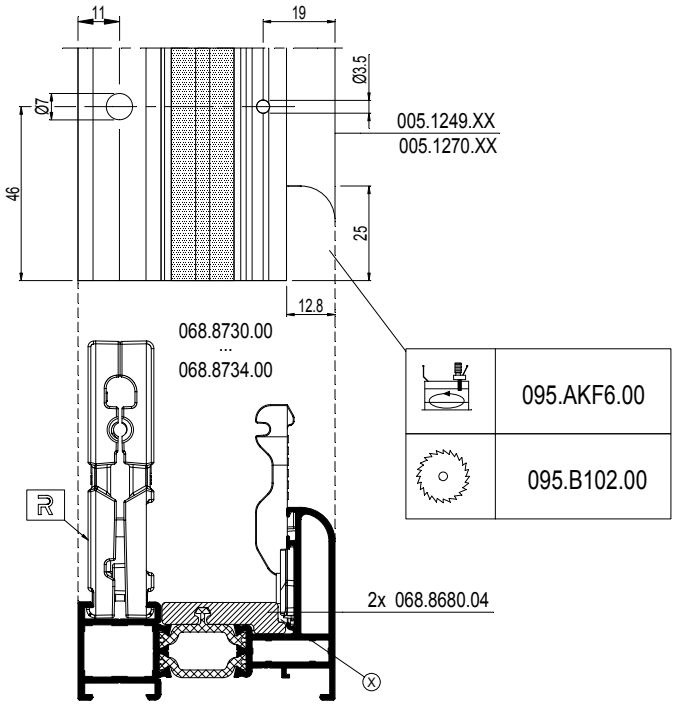

X DICHTINGSMIDDEL
MATIERE D'ETANCHEITE
SEALING AGENT
ABDICHTUNG

	095.C500.00		095.C600.00 097.O900.00 097.P000.00
			097.P800.00
	095.C500.00		095.C600.00
			097.P100.00 097.P200.00 097.P800.00
	095.C700.00		097.P100.00 097.P200.00 097.P800.00
	---		---
			097.0374.00

F

D0081632

CS 68-FP
EW 30

KLEINHOUTEN BUITENZIJDE
PETIT BOIS EXTERIEUR
GEORGIAN BARS OUTSIDE
ZIERSPROSSE AUSSEN

NIET TOEPASBAAR VOOR COATEX GELAKTE PROFIELEN
PAS APPLICABLE POUR PROFILES LACQUES COATEX
NOT APPLICABLE FOR COATEX PAINTED PROFILES
NICHT VERWENDBAR FÜR PROFILEN LACKIERT MIT COATEX

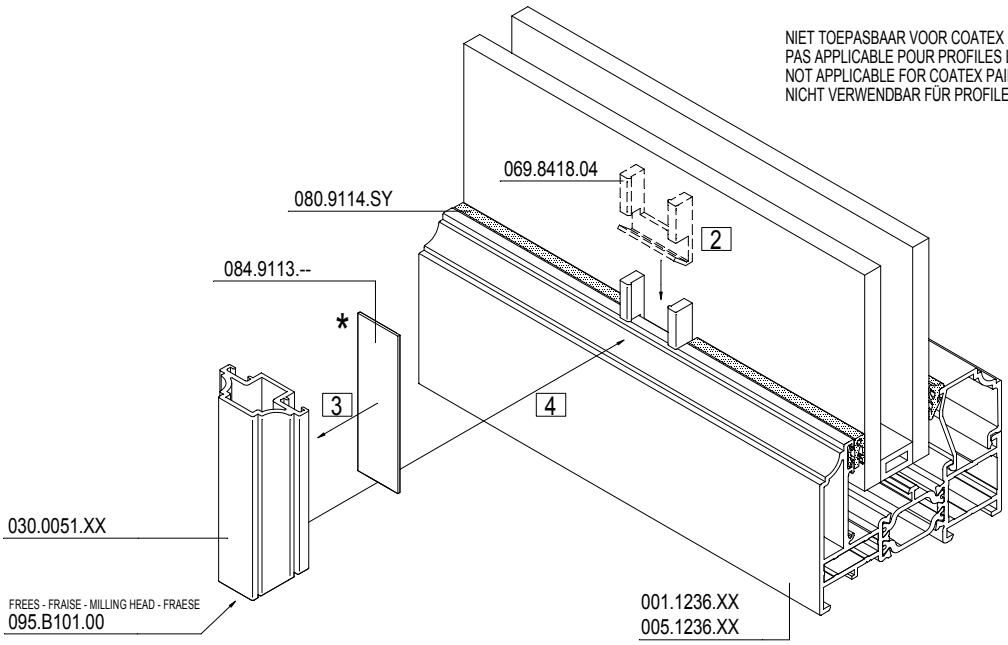

*VERLIJMINGSOPPERVLAKTE ONTVETTEN VOOR HET AANBRENGEN VAN 084.9113.--
*DEGRAISSER SURFACE A COLLER AVANT D'APPLIQUER LE 084.9113.--
*DEGREASE GLUEING SURFACE BEFORE APPLYING 084.9113.--
*VERLEIMUNGSOBERFLAECHE ENTFETTEN BEVOR 084.9113.-- ANZUBRINGEN

MONTAGEVOLGORDE
L 'ORDRE DE MONTAGE
THE ORDER OF ASSEMBLY
MONTAGEREIHENFOLGE
1 2 3 .

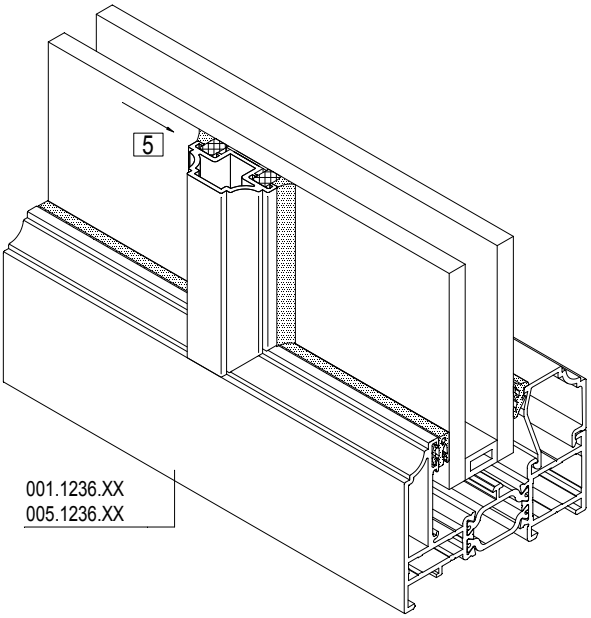

	095.AKF6.00
	095.B101.00

	095.AKF6.00
	095.B102.00

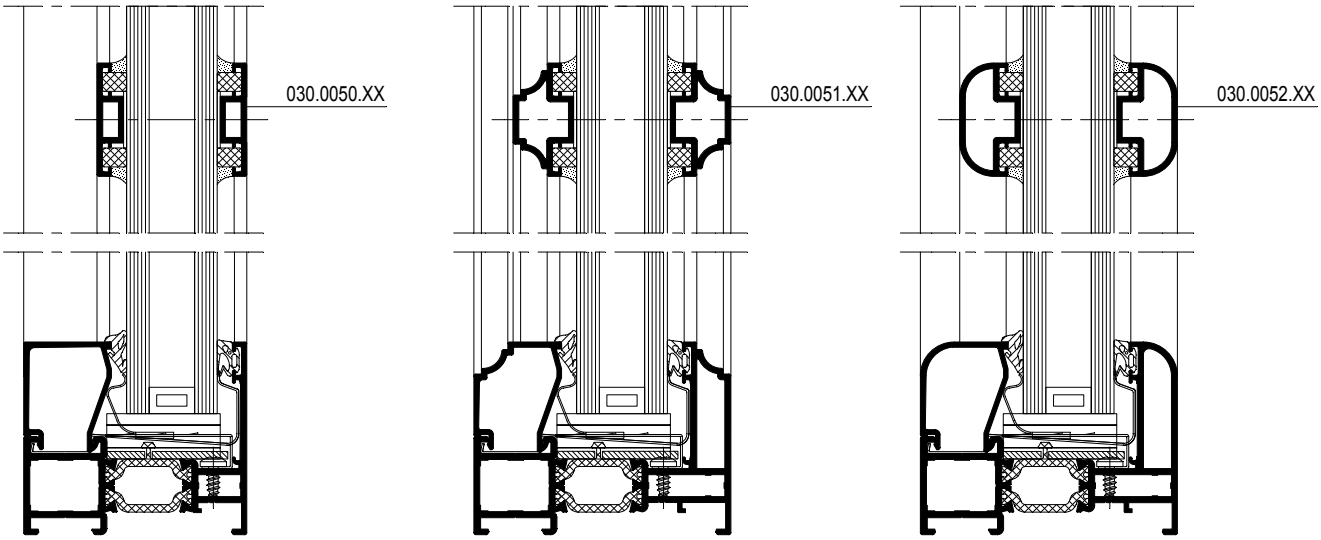

F

D0081637

KLEINHOUTEN BINNENZIJDE
PETIT BOIS INTERIEUR
GEORGIAN BARS INSIDE
ZIERSPROSSE INNEN

KLEINHOUTEN Max. L=2000MM
PETIT BOIS Max. L=2000MM
GEORGIAN BARS Max. L=2000MM
ZIERSPROSSE Max. L=2000MM

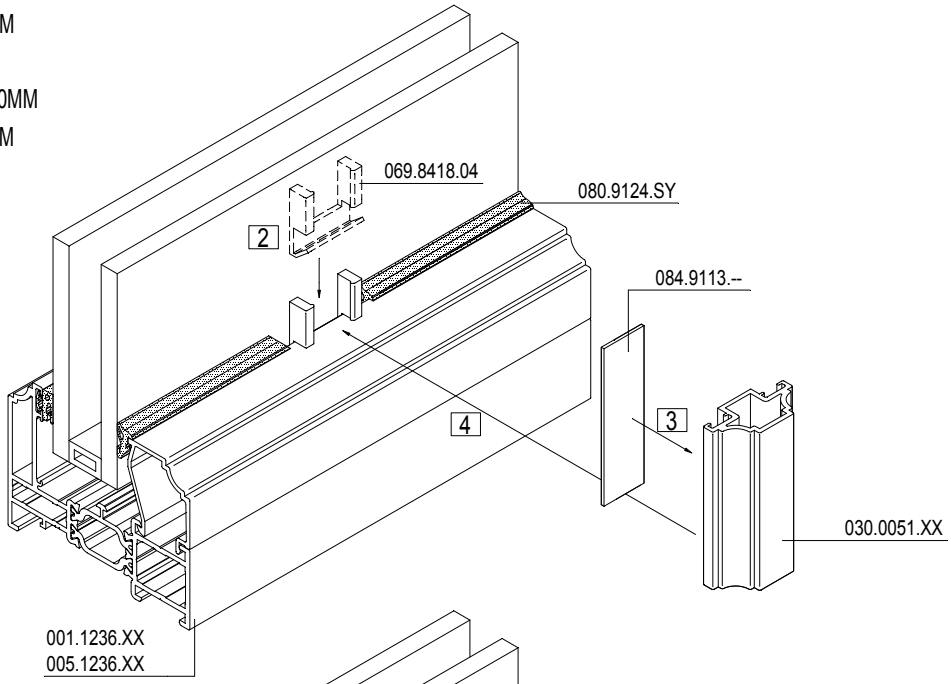

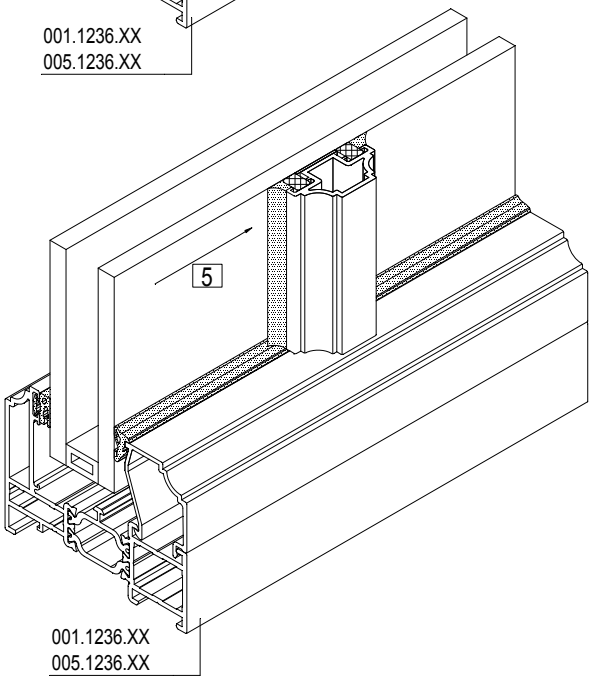

KLEINHOUTEN
1.Verwijderen van stof en zaagresten.
Reinigen en ontvetten met Reynafinish 60,
art. nr. 086.9210.--
2. Aanbrengen klipsen, art. nr.069.8418.04.
3. Aanbrengen dubbelzijdige kleefband.
4. Aanbrengen kleinhouten.
5. Kleinhouten afdichten met neutraal dichtingsmiddel.

PETIT BOIS
1. Enlèvement de poussières et de copeaux.
Dégraissage avec Reynafinish 60,
art. nr. 086.9210.--
2. Mise en place clip art. nr.069.8418.04.
3. Mise en place bande 2 faces autocollantes.
4. Mise en place petits bois.
5. Etancher les petits bois avec
une matière d'étanchéité neutre.

GEORGIAN BARS
1. Remove dust and saw dust.
Degreasing with Reynafinish 60,
art. nr. 086.9210.--
2. Insert clip, art. nr.069.8418.04.
3. Apply double sided self adhesive tape.
4. Apply georgian bars.
5. Seal off georgian bars with a neutral sealing agent.

ZIERSPROSSE
1. Staub und Sägereste entfermen.
Entfetten mit Reynafinish 60,
art. nr. 086.9210.--
2. Montage Klippe, ar. nr. 069.8418.04.
3. Montage beidseitiges Klebeband.
4. Montage Ziersprosse.
5. Abdichtung mit einer neutralen Dichtungsmasse.

TABEL MET TRAAGHEIDSMOMENTEN
TABLEAU AVEC MOMENTS D'INERTIE
TABLE WITH MOMENTS OF INERTIA
TABELLE MIT TRAEGHEITSMOMENTEN

i
Versterking langs binnen
Renforcement du côté intérieur
Reinforcement inside
Verstärkung der Innenseite

e
Versterking langs buiten
Renforcement du côté extérieur
Reinforcement outside
Verstärkung der Außenseite

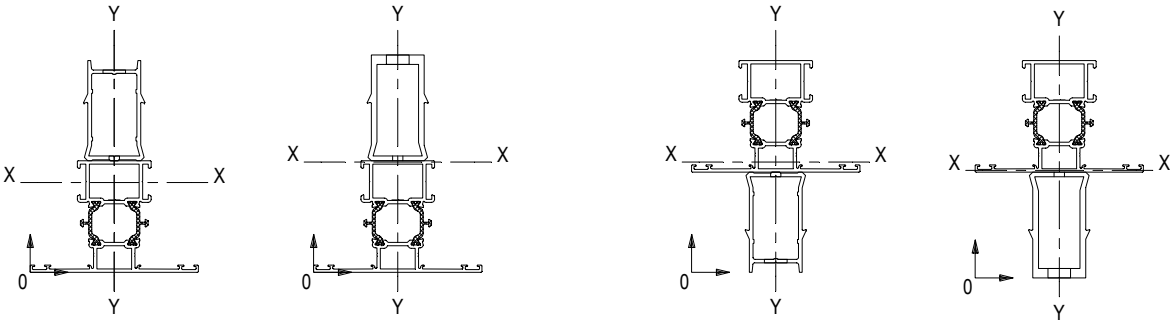

Opmerking: Versteviging van binnenzijde + scharnier is niet mogelijk indien de binnenzijde van een T-profiel < 75 mm
Bevestiging: om de 300 mm

Remarque: Renforcement du côté intérieur + paumelle est impossible si le côté intérieur de la traverse < 75 mm
Fixation: Tous les 300 mm

Remark: Reinforcement of inner side + hinge is not possible in case the inner side of a Transom-mullion < 75 mm
Fixing: each 300 mm

Anmerkung: Das Anbringen einer Verstärkung auf der Rahmeninnenseite ist nur möglich, wenn keine Beschlagteile vorhanden sind bzw. die Profilbreite < 75mm beträgt.
Befestigung: jede 300 mm

T-profiel Traverse Transom-mullion Sprosse	Zonder versteviging Sans renforcement Without reinforcement Ohne Verstärkung			met avec with mit 030.1097.00		met avec with mit 030.1098.00	
	Ix cm4	Wx cm3		Ix cm4	Wx cm3	Ix cm4	Wx cm3
005.0113.XX 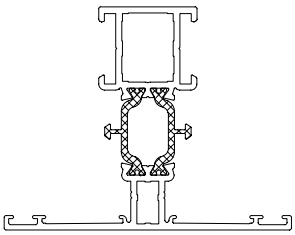	14.901	4.187	e	54.088	9.448	78.876	11.971
			i	--	--	--	--
005.0120.XX 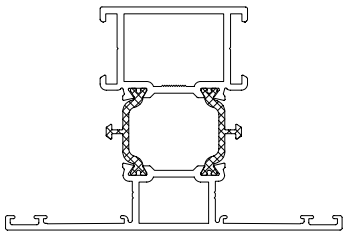	18.912	5.745	e	63.097	10.816	92.067	14.852
			i	79.521	12.325	115.420	19.882
005.0114.XX 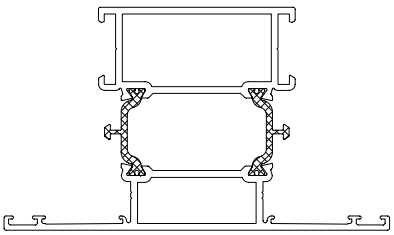	22.304	6.552	e	69.598	11.488	101.467	17.075
			i	85.309	12.829	124.227	20.536

F

D0081641

CS 68-FP
EW 30

TABEL MET TRAAGHEIDSMOMENTEN
TABLEAU AVEC MOMENTS D'INERTIE
TABLE WITH MOMENTS OF INERTIA
TABELLE MIT TRAEGHEITSMOMENTEN

T-profiel Traverse Transom-mullion Sprosse	Zonder versteviging Sans renforcement Without reinforcement Ohne Verstärkung			met avec with mit 030.1097.00		met avec with mit 030.1098.00	
	Ix cm4	Wx cm3		Ix cm4	Wx cm3	Ix cm4	Wx cm3
005.0123.XX 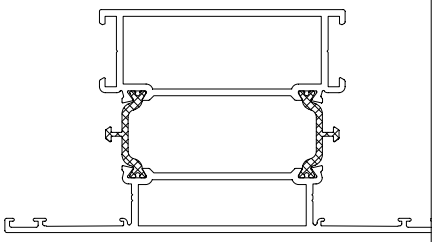	25.678	7.627	e	75.519	12.098	109.943	19.043
			i	90.647	13.308	132.187	21.132
005.0813.XX 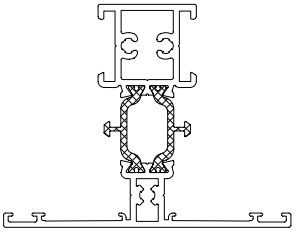	16.273	4.712	e	58.218	10.309	84.884	13.233
			i	--	--	--	--
005.0820.XX 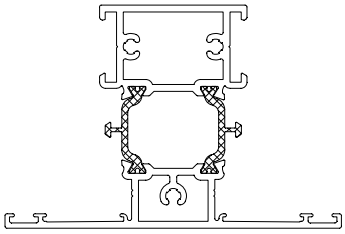	20.608	6.077	e	67.210	11.214	98.182	16.299
			i	82.142	12.530	119.688	20.144
005.0814.XX 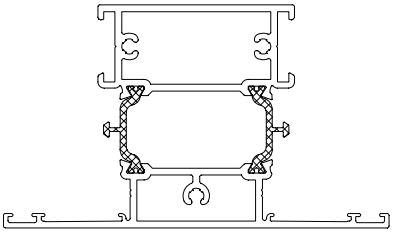	23.978	7.149	e	73.293	11.840	106.942	18.460
			i	87.691	13.025	127.989	20.773
005.0823.XX 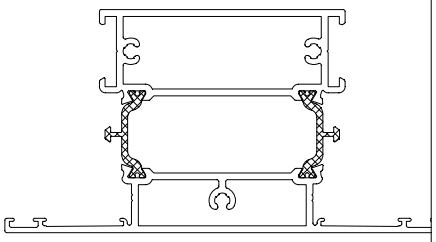	27.337	8.220	e	78.897	12.418	114.896	19.468
			i	92.856	13.499	135.584	21.351

F

D0081641

TABEL MET TRAAGHEIDSMOMENTEN
TABLEAU AVEC MOMENTS D'INERTIE
TABLE WITH MOMENTS OF INERTIA
TABELLE MIT TRAEGHEITSMOMENTEN

i — Versterking langs binnen
Renforcement du côté intérieur
Reinforcement inside
Verstärkung der Innenseite

e — Versterking langs buiten
Renforcement du côté extérieur
Reinforcement outside
Verstärkung der Außenseite

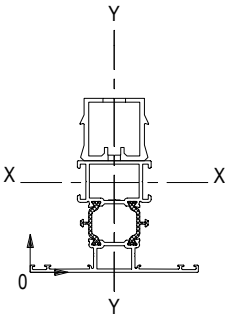

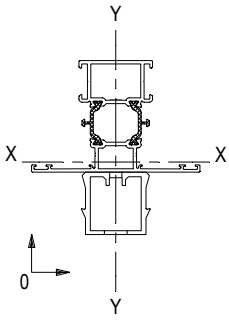

Opmerking: Versteviging van binnenzijde + scharnier is niet mogelijk indien de binnenzijde van een T-profiel < 75 mm
Bevestiging: om de 300 mm

Remarque: Renforcement du côté intérieur + paumelle est impossible si le côté intérieur de la traverse < 75 mm
Fixation: Tous les 300 mm

Remark: Reinforcement of inner side + hinge is not possible in case the inner side of a Transom-mullion < 75 mm
Fixing: each 300 mm

Anmerkung: Das Anbringen einer Verstärkung auf der Rahmeninnenseite ist nur möglich, wenn keine Beschlagteile vorhanden sind bzw. die Profilbreite < 75mm beträgt.
Befestigung: jede 300 mm

T-profiel Traverse Transom-mullion Sprosse	Zonder versteviging Sans renforcement Without reinforcement Ohne Verstärkung			met avec with mit 030.1096.00	
	Ix cm4	Wx cm3		Ix cm4	Wx cm3
005.0113.XX 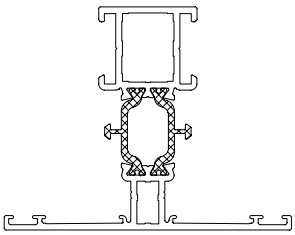	14.901	4.187	e	38.354	7.241
			i	--	--
005.0120.XX 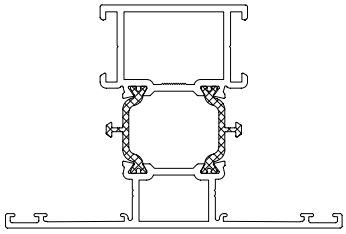	18.912	5.745	e	45.915	9.194
			i	59.382	12.333
005.0114.XX 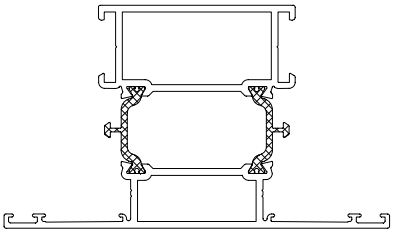	22.304	6.552	e	51.394	10.681
			i	64.332	12.935

D0081642

CS 68-FP
EW 30

TABEL MET TRAAGHEIDSMOMENTEN
TABLEAU AVEC MOMENTS D'INERTIE
TABLE WITH MOMENTS OF INERTIA
TABELLE MIT TRAEGHEITSMOMENTEN

T-profiel Traverse Transom-mullion Sprosse	Zonder versteviging Sans renforcement Without reinforcement Ohne Verstärkung			met avec with mit 030.1096.00	
	Ix cm4	Wx cm3		Ix cm4	Wx cm3
005.0123.XX 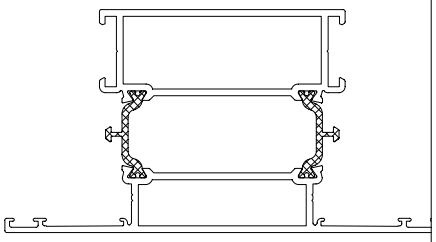	25.678	7.627	e	56.538	12.135
			i	69.014	13.518
005.0813.XX 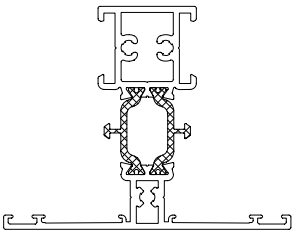	16.273	4.712	e	41.733	8.106
			i	--	--
005.0820.XX 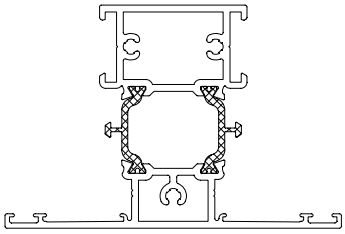	20.608	6.077	e	49.291	10.141
			i	61.623	12.583
005.0814.XX 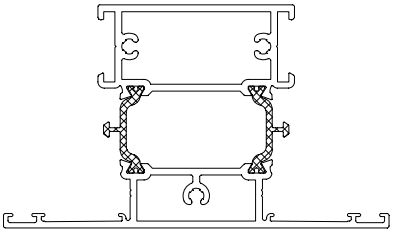	23.978	7.149	e	54.534	11.609
			i	66.437	13.180
005.0823.XX 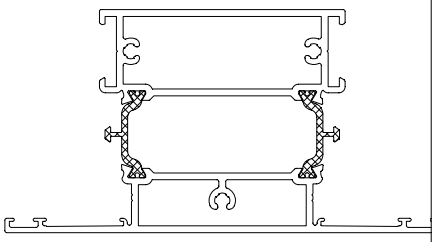	27.337	8.220	e	59.449	12.818
			i	70.996	13.761

F

D0081642

POSITIE HOEKEN
POSITIONNEMENT DU EQUERRES
POSITIONING OF CORNER CLEATS
POSITIONIERUNG VON ECKWINKEL

D0081643

POSITIE HOEKEN
POSITIONNEMENT DU EQUERRES
POSITIONING OF CORNER CLEATS
POSITIONIERUNG VON ECKWINKEL

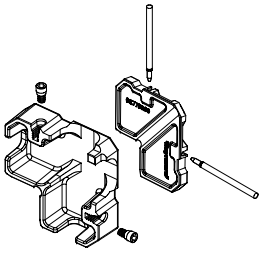

STOLPDEUR
PORTE DOUBLE OUVRANT
DOUBLE CASEMENT DOOR
STULPFLUEGELTUER

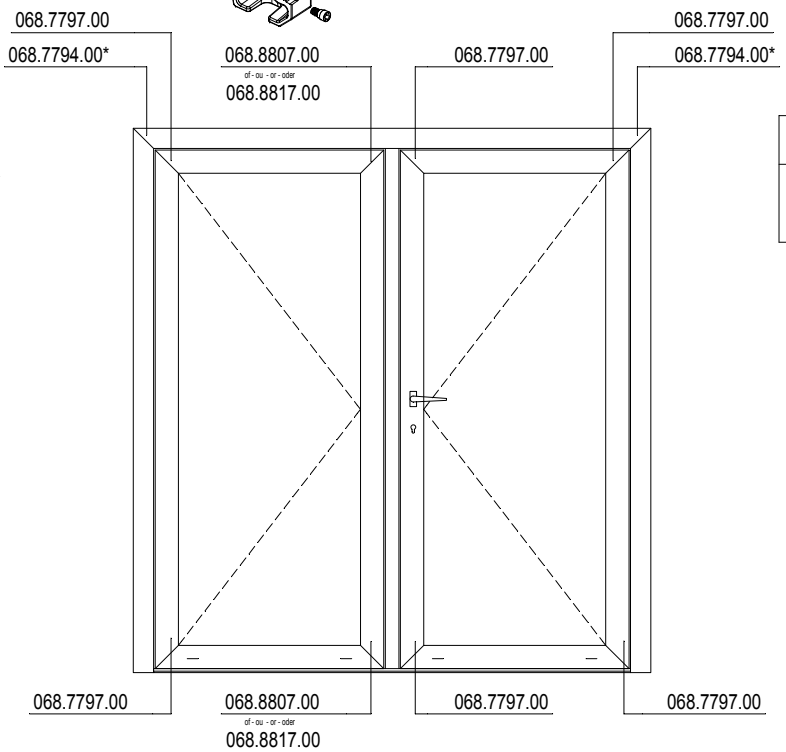

* 068.7794.00	* 068.7797.00
005.1869.XX 005.1898.XX	005.0569.XX 005.0598.XX

Z-T DEUR
PORTE Z-T
Z-T DOOR
Z-T TUER

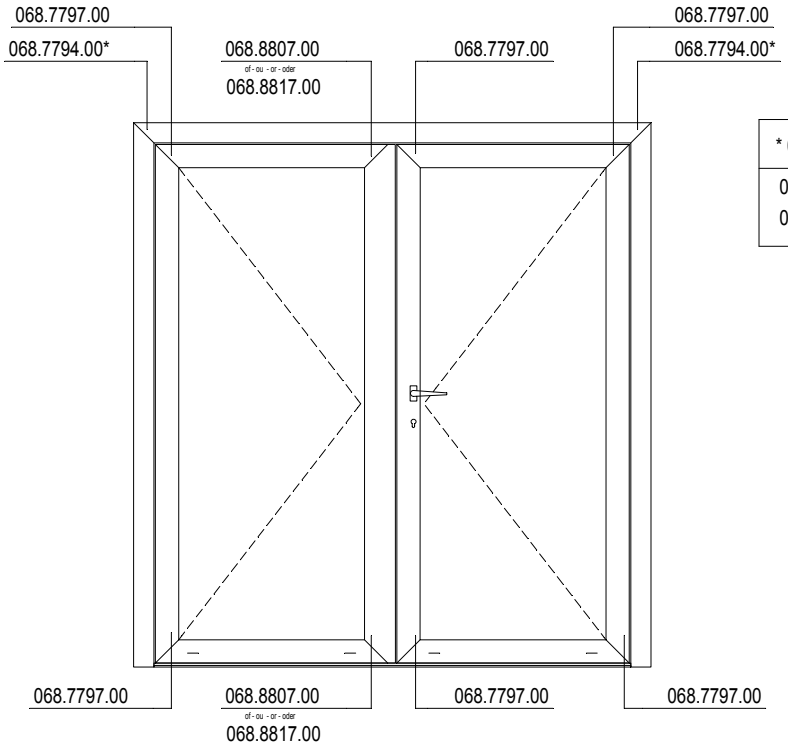

* 068.7794.00	* 068.7797.00
005.1869.XX 005.1898.XX	005.0569.XX 005.0598.XX

* GELIJKAARDIG VOOR BUITENDRAAIENDE DEUREN
* IDENTIQUE POUR LES PORTES OUVRANT VERS L'EXTERIEUR
* SIMILAR FOR OUTWARD OPENING DOORS
* FÜR AUSSEN OEFFNENDE TUEREN IDENTISCH

F

D0081643

LIJMINJECTIE/PERSHOEKEN
INJECTION DE COLLE/EQUERRES A SERTIR
GLUE INJECTION/ CRIMP CORNER CLEATS
KLEBEINJEKTION/PRESSECKWINKEL

OPTIE A : LIJMINJECTIE NA HET PERSEN
OPTION A : INJECTION DE COLLE APRES LE SERTISSAGE
OPTION A : GLUE INJECTION AFTER CRIMPING
OPTION A : KLEBEINJEKTION NACH DEM PRESSEN

GLUE	084.9080.--
	095.E300.00 084.9085.--
	095.E400.00 084.9085.--

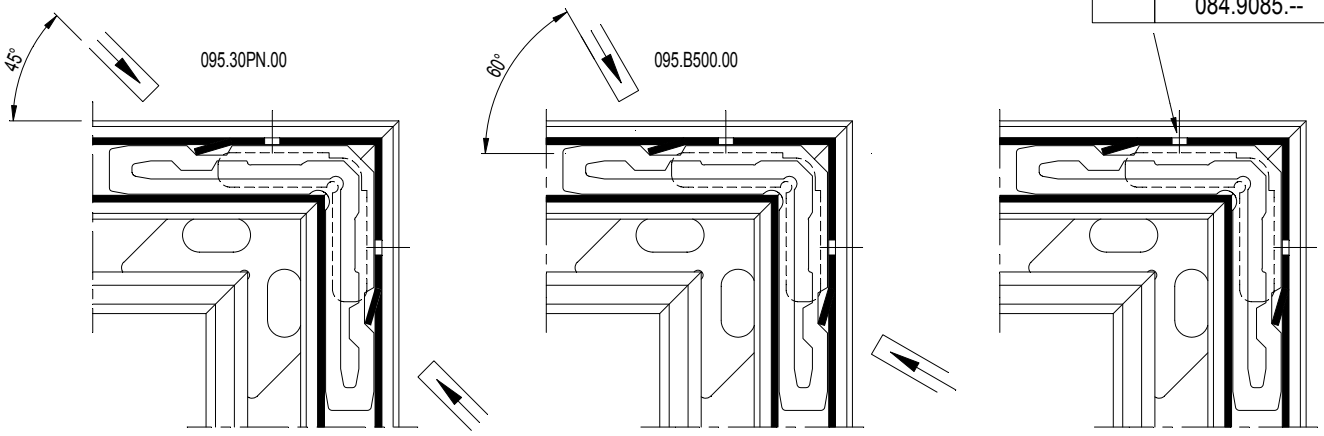

OPTIE B : LIJMINJECTIE VOOR HET PERSEN
OPTION B : INJECTION DE COLLE AVANT LE SERTISSAGE
OPTION B : GLUE INJECTION BEFORE CRIMPING
OPTION B : KLEBEINJEKTION VOR DEM PRESSEN

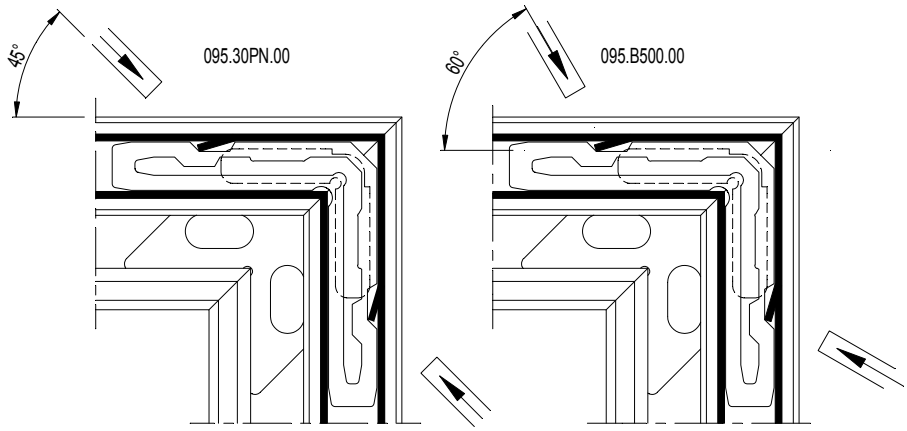

F

BIJKOMENDE INFO VOORBEREIDING/VERWERKING -> RAADPLEEG HOOFDSTUK B !
INFO COMPLEMENTAIRE PREPARATION/USINAGE -> CONSULTEZ CHAPITRE B !
ADDITIONAL INFO PREPARATION/PROCESSING -> CONSULT CHAPTER B !
ZUSAETZLICHE INFO VORBEREITUNG/VERARBEITUNG -> SIEHE KAPITEL B !

D0081644

LIJMINJECTIE NA PERSEN
INJECTION DE COLLE APRÈS LE SERTISSAGE
GLUE INJECTION AFTER CRIMPING
KLEBEINJEKTION NACH DEM PRESSEN

095.C500.00	095.C600.00 097.O900.00 097.P000.00	005.0113.XX 005.0139.XX 005.0141.XX
	097.P600.00	
095.C500.00	095.C600.00	005.0052.XX 005.0120.XX 005.0111.XX 005.0123.XX 005.0114.XX 005.0125.XX 005.0183.XX 005.0140.XX 005.0525.XX 005.0544.XX
	097.P600.00 097.P100.00 097.P200.00	
095.C700.00	095.P600.00 097.P100.00 097.P200.00	

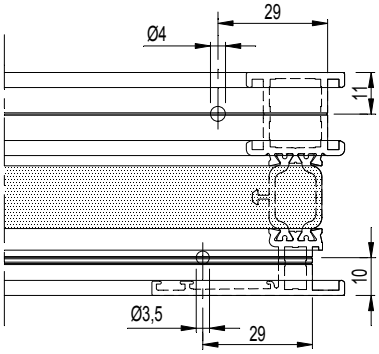

095.C500.00	095.C600.00 097.O900.00 097.P000.00	005.0102.XX
	097.P600.00	
095.C500.00	095.C600.00	005.0052.XX 005.0112.XX 005.0121.XX 005.0192.XX
	097.P600.00 097.P100.00 097.P200.00	
095.C700.00	097.P600.00 097.P100.00 097.P200.00	

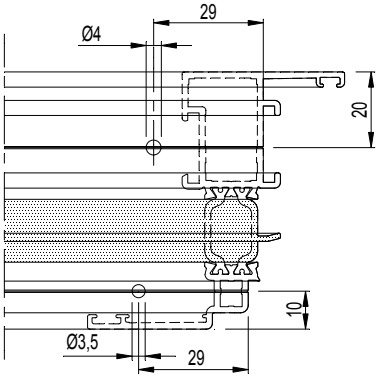

095.C500.00	095.C600.00 097.O900.00 097.P000.00	005.1213.XX 005.1236.XX 005.1249.XX 005.1270.XX
	097.P600.00	
095.C500.00	095.C600.00	005.1216.XX 005.1220.XX 005.1250.XX 005.1271.XX
	097.P600.00 097.P100.00 097.P200.00	
095.C700.00	097.P600.00 097.P100.00 097.P200.00	

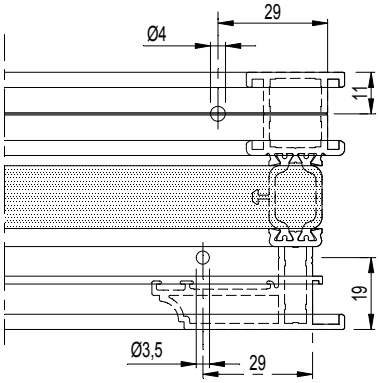

F

D0081644

LIJMINJECTIE NA PERSEN
INJECTION DE COLLE APRÈS LE SERTISSAGE
GLUE INJECTION AFTER CRIMPING
KLEBEINJEKTION NACH DEM PRESSEN

095.C500.00	095.C600.00 097.O900.00 097.P000.00		005.0202.XX 005.0251.XX
	097.P600.00		
095.C500.00	095.C600.00		005.0292.XX 005.0221.XX 005.0203.XX 005.0252.XX
	097.P600.00 097.P100.00 097.P200.00		
095.C700.00	097.P600.00 097.P100.00 097.P200.00		

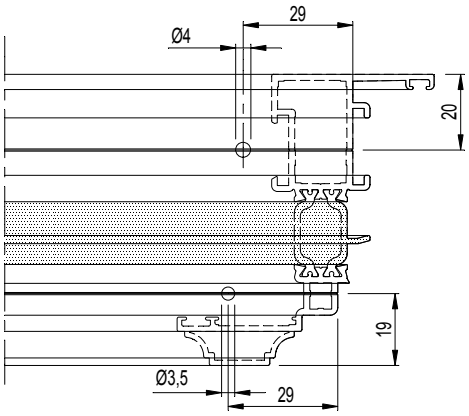

095.C500.00	095.C600.00		005.1869.XX 005.1898.XX 005.0569.XX 005.0598.XX
	097.P400.00 097.P500.00		
095.C700.00	097.P400.00 097.P500.00		

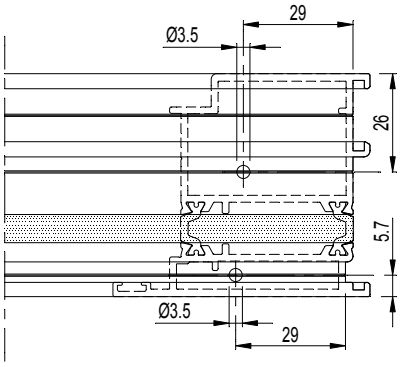

095.C500.00	095.C600.00		005.3014.XX 005.3026.XX 005.1016.XX
	097.P400.00 097.P500.00		
095.C700.00	097.P400.00 097.P500.00		

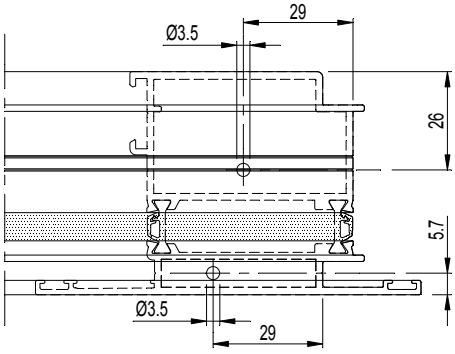

D0081645

F

LIJMINJECTIE NA PERSEN
INJECTION DE COLLE APRÈS LE SERTISSAGE
GLUE INJECTION AFTER CRIMPING
KLEBEINJEKTION NACH DEM PRESSEN

SBZ 122 SBZ 140	005.0136.XX 005.0183.XX 005.0125.XX 005.0140.XX 005.0525.XX

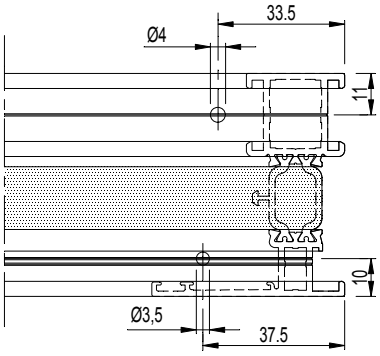

SBZ 122 SBZ 140	005.0139.XX 005.0052.XX 005.0111.XX 005.0141.XX 005.0120.XX 005.1443.XX 005.0113.XX 005.0114.XX 005.1444.XX 005.1442.XX 005.0123.XX 005.1451.XX 005.0544.XX

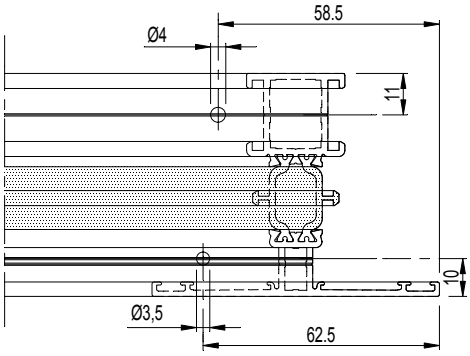

SBZ 122 SBZ 140	005.0102.XX 005.0052.XX 005.0112.XX 005.0121.XX 005.0192.XX

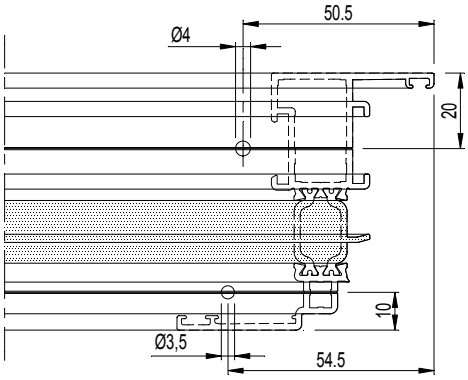

SBZ 122 SBZ 140	005.1236.XX 005.1249.XX 005.1216.XX 005.1250.XX

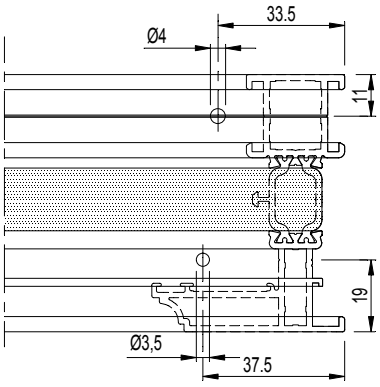

SBZ 122 SBZ 140	005.1213.XX 005.1270.XX 005.1220.XX 005.1271.XX

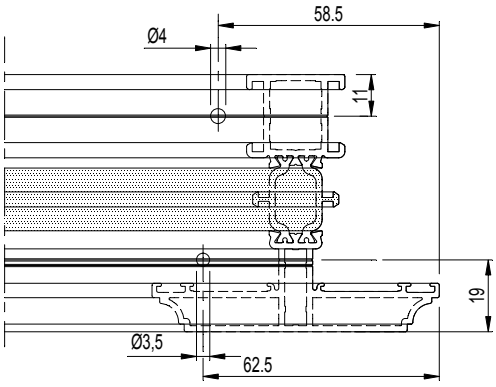

F

D0081645

F

D0081646

LIJMINJECTIE NA PERSEN
INJECTION DE COLLE APRÈS LE SERTISSAGE
GLUE INJECTION AFTER CRIMPING
KLEBEINJEKTION NACH DEM PRESSEN

SBZ 122 SBZ 140	005.0202.XX 005.0203.XX 005.0251.XX 005.0252.XX 005.0292.XX 005.0221.XX

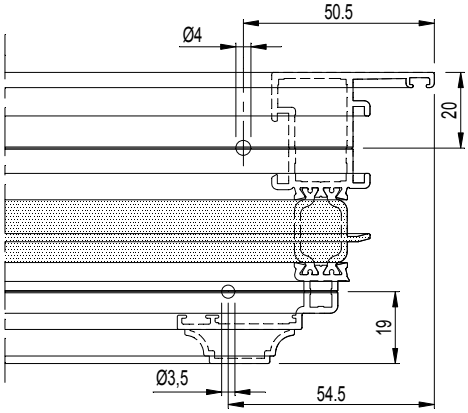

SBZ 122 SBZ 140	005.1869.XX 005.1898.XX 005.0569.XX 005.0598.XX

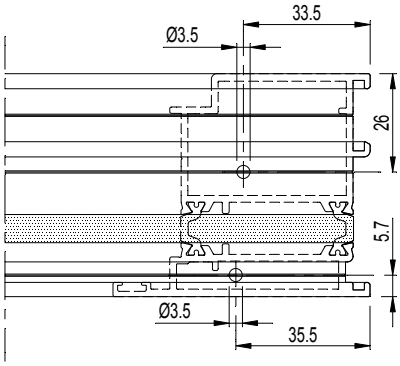

SBZ 122 SBZ 140	005.3014.XX 005.3026.XX 005.1016.XX

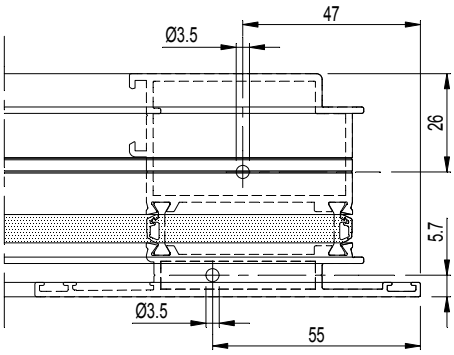

F

D0081646

HOEKENPERS 095.30PN.06
SERTISSEUSE 095.30PN.06
CRIMPING MACHINE 095.30PN.06
ECKVERBINDUNGSMASCHINE 095.30PN.06

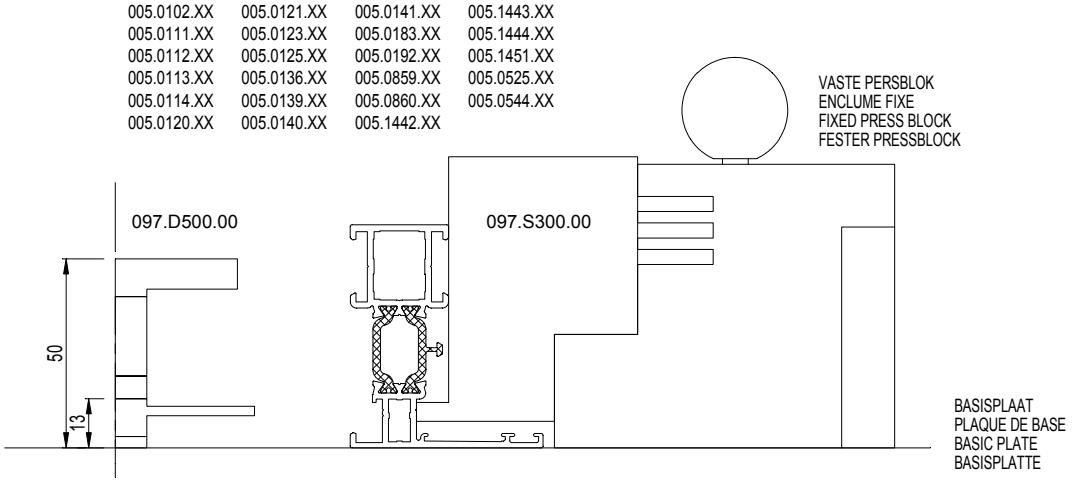

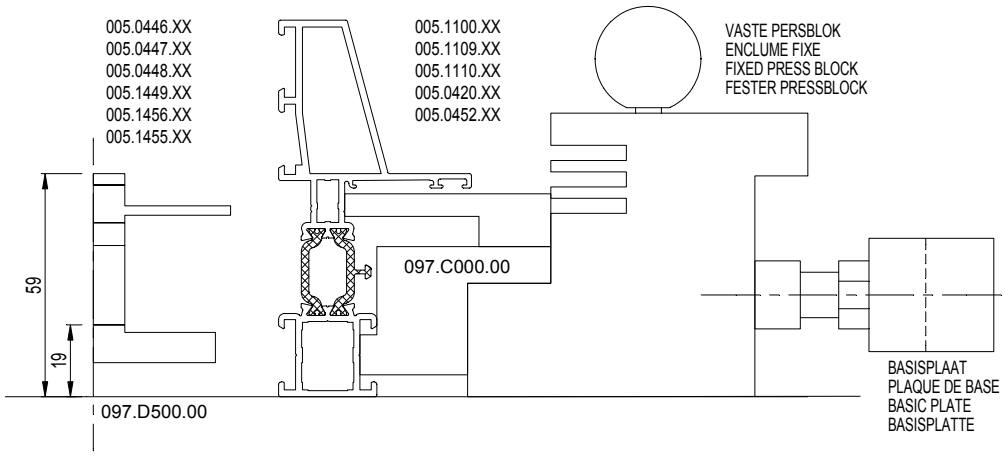

F

D0081648

HOEKENPERS 095.30PN.06
SERTISSEUSE 095.30PN.06
CRIMPING MACHINE 095.30PN.06
ECKVERBINDUNGSMASCHINE 095.30PN.06

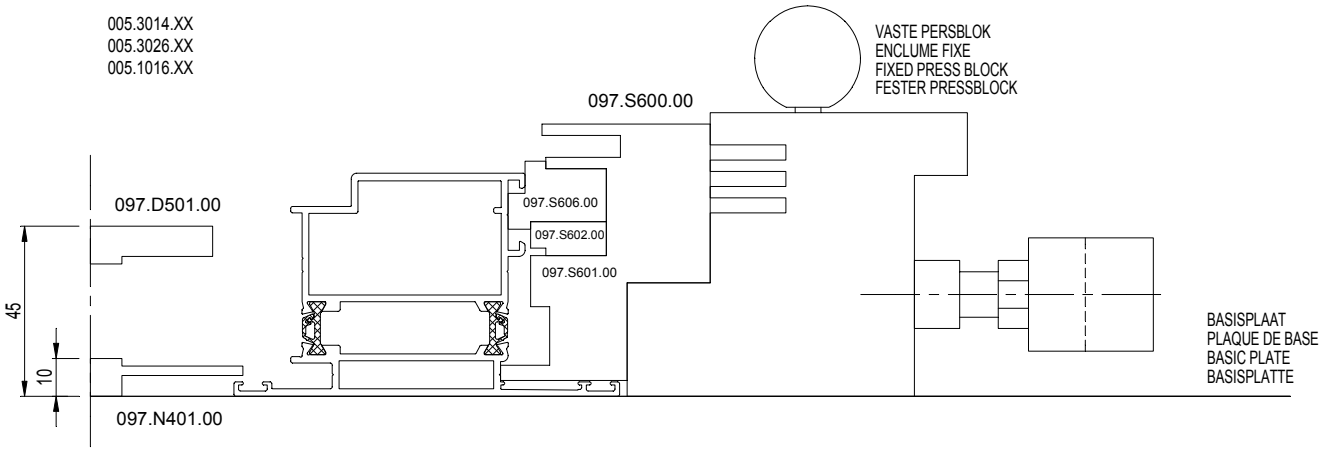

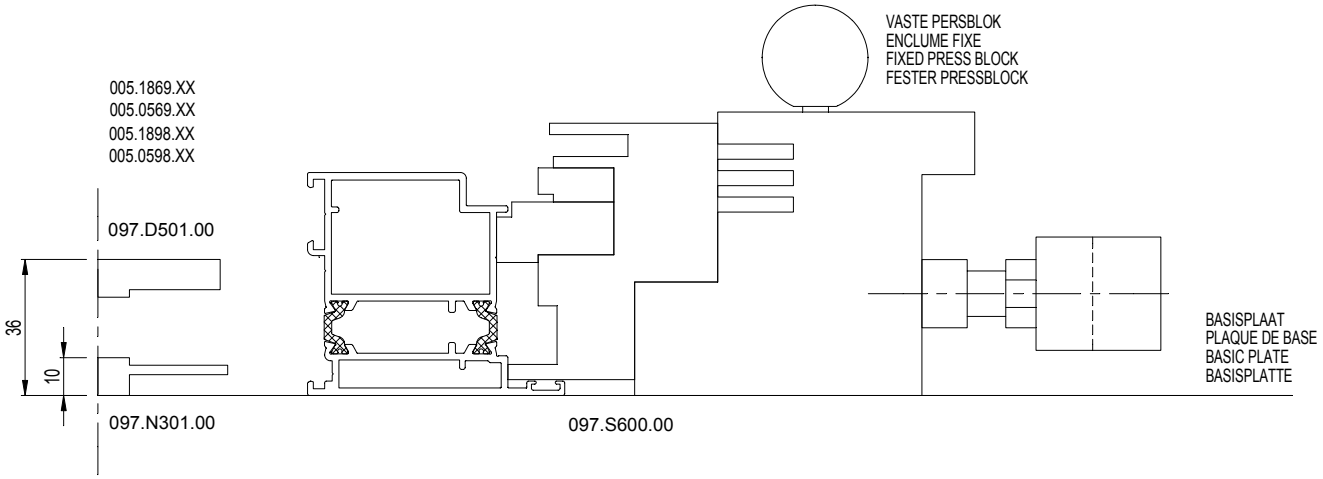

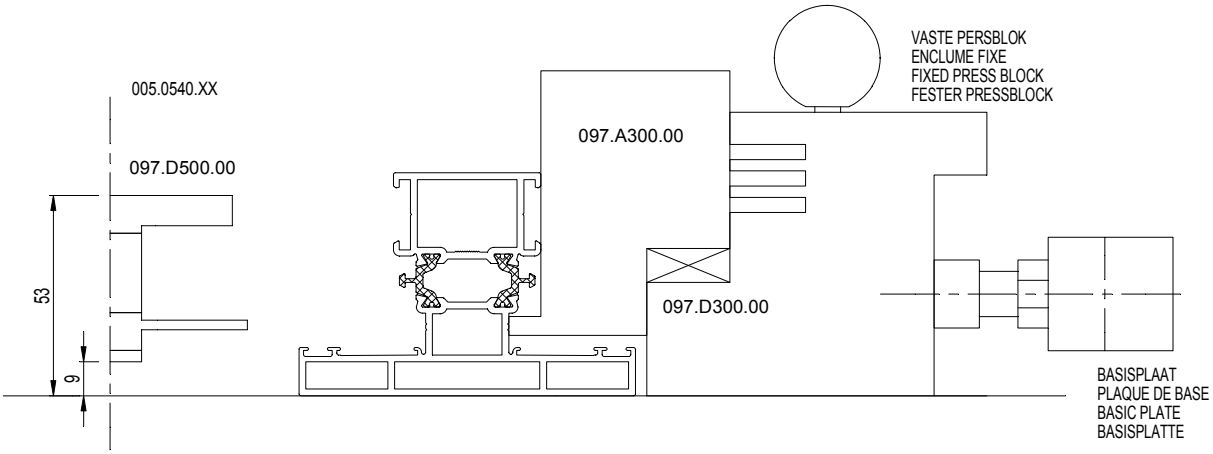

F

D0081648

F

D0081649

HOEKENPERS 095.30PN.06
SERTISSEUSE 095.30PN.06
CRIMPING MACHINE 095.30PN.06
ECKVERBINDUNGSMASCHINE 095.30PN.06

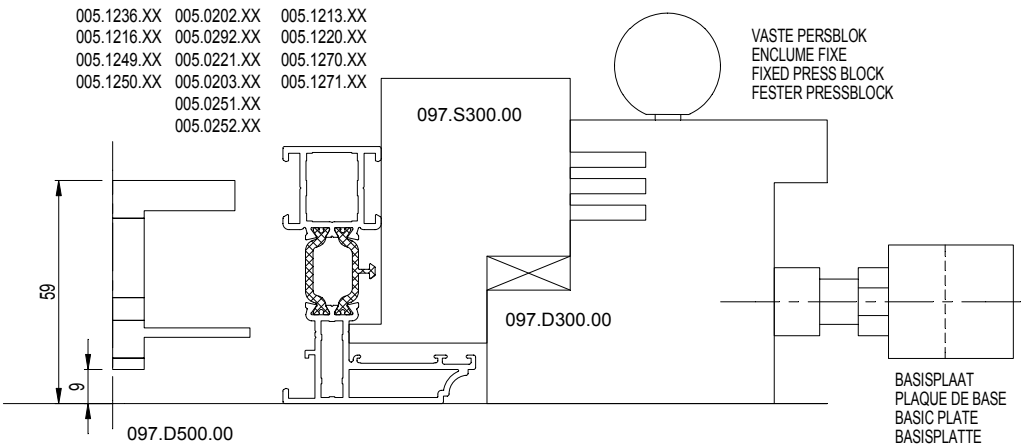

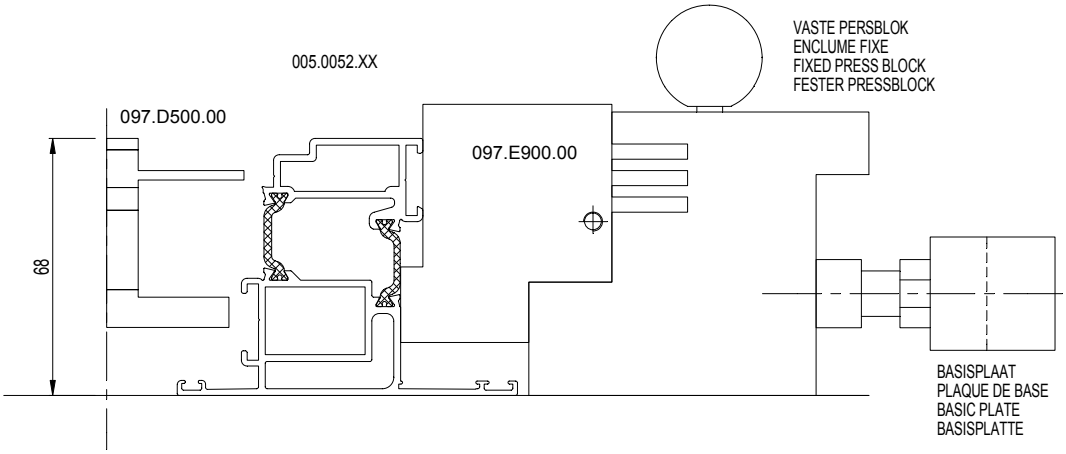

F

D0081649

HOEKENPERS 095.B500.00
SERTISSEUSE 095.B500.00
CRIMPING MACHINE 095.B500.00
ECKVERBINDUNGSMASCHINE 095.B500.00

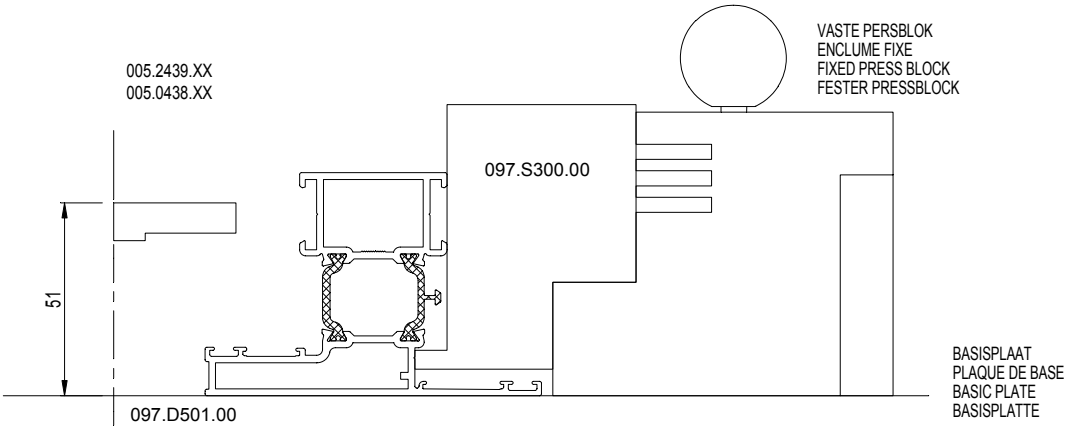

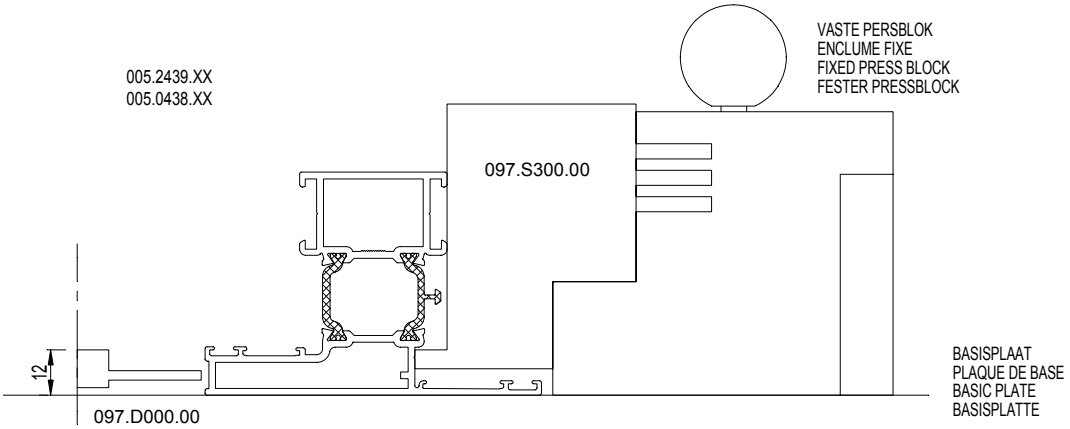

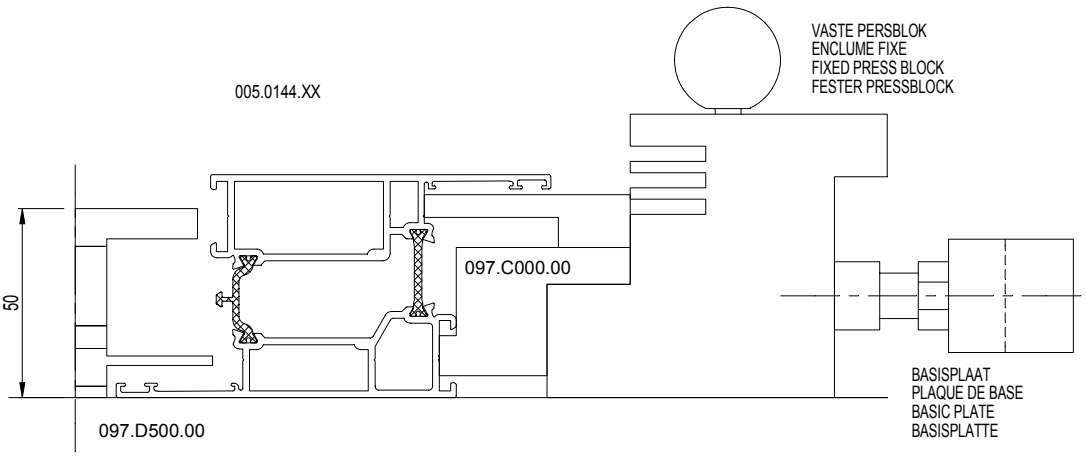

F

D0081650

HOEKENPERS 095.B500.00
SERTISSEUSE 095.B500.00
CRIMPING MACHINE 095.B500.00
ECKVERBINDUNGSMASCHINE 095.B500.00

005.0136.XX 005.0102.XX 005.0113.XX 005.1443.XX
005.0183.XX 005.0192.XX 005.0120.XX 005.1442.XX
005.0140.XX 005.0112.XX 005.0114.XX 005.1444.XX
005.0125.XX 005.0121.XX 005.0123.XX 005.1451.XX
005.0525.XX 005.0139.XX 005.0111.XX 005.0141.XX
005.0544.XX 005.0105.XX

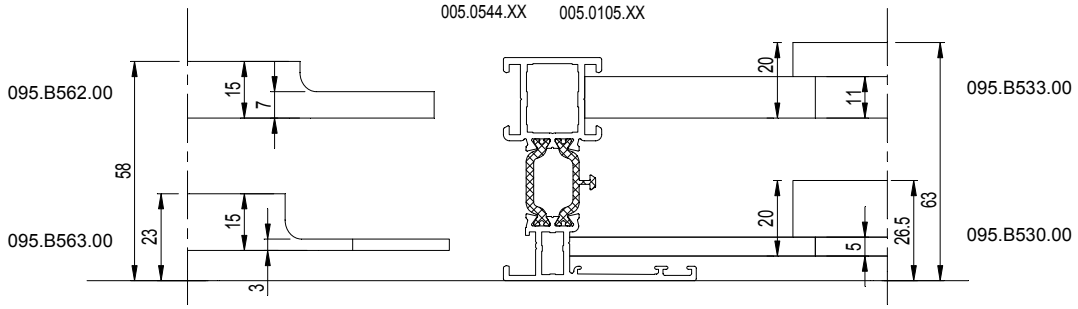

005.0446.XX 005.1100.XX
005.0447.XX 005.1109.XX
005.0448.XX 005.1110.XX
005.1449.XX 005.0420.XX
005.1456.XX 005.0258.XX
005.1455.XX 005.0452.XX

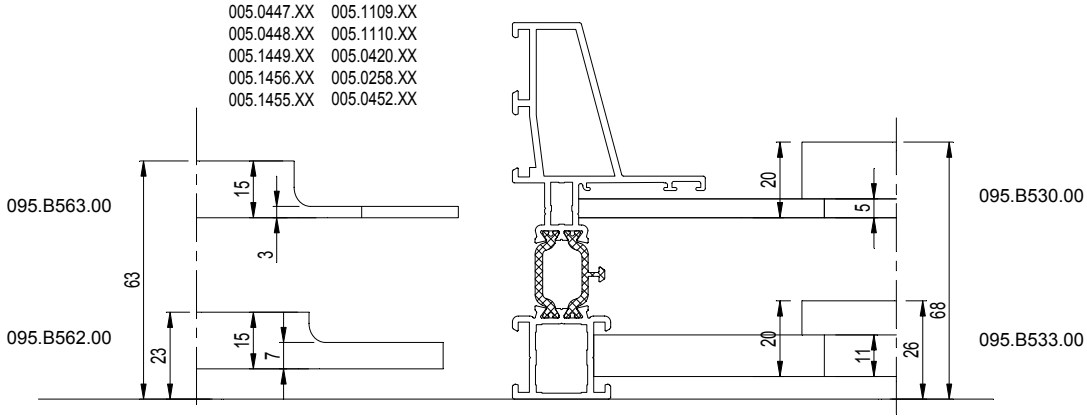

005.1236.XX 005.0202.XX 005.1213.XX
005.1216.XX 005.0292.XX 005.1220.XX
005.1249.XX 005.0221.XX 005.1270.XX
005.1250.XX 005.0203.XX 005.1271.XX
005.0251.XX
005.0252.XX

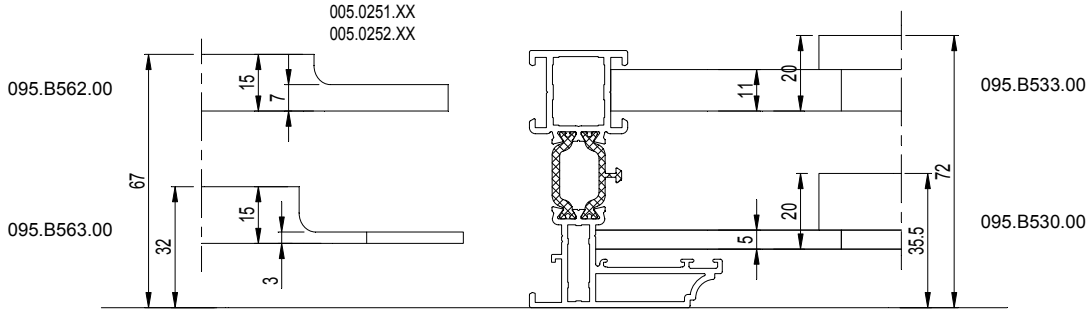

F

D0081650

HOEKENPERS 095.B500.00
SERTISSEUSE 095.B500.00
CRIMPING MACHINE 095.B500.00
ECKVERBINDUNGSMASCHINE 095.B500.00

005.0144.XX

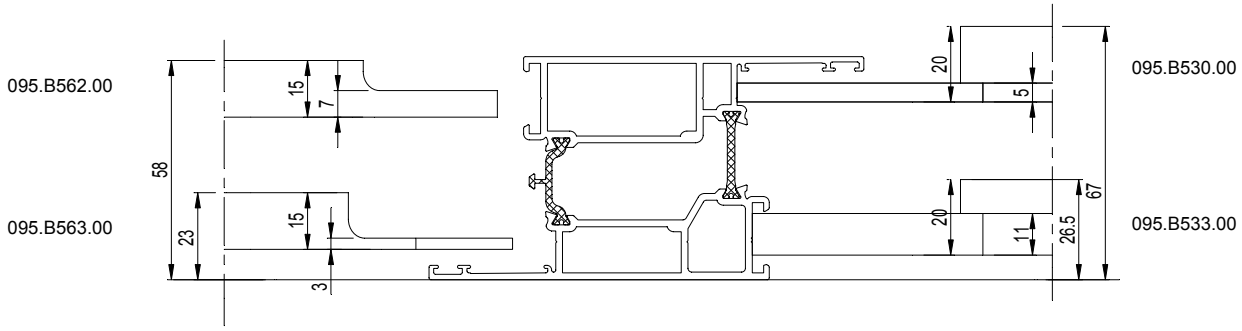

005.0052.XX

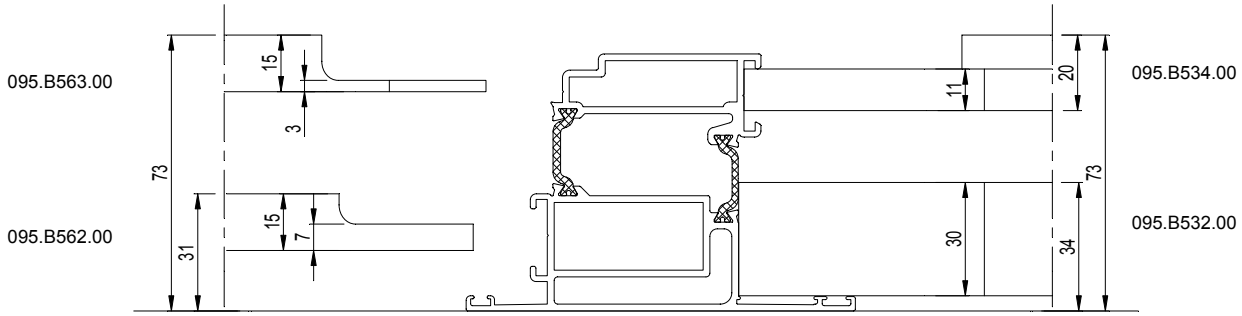

F

D0081651

HOEKENPERS 095.B500.00
SERTISSEUSE 095.B500.00
CRIMPING MACHINE 095.B500.00
ECKVERBINDUNGSMASCHINE 095.B500.00

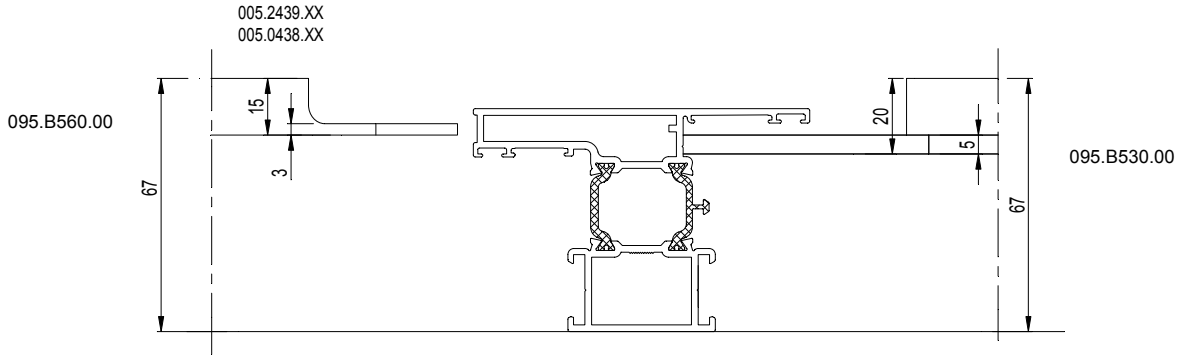

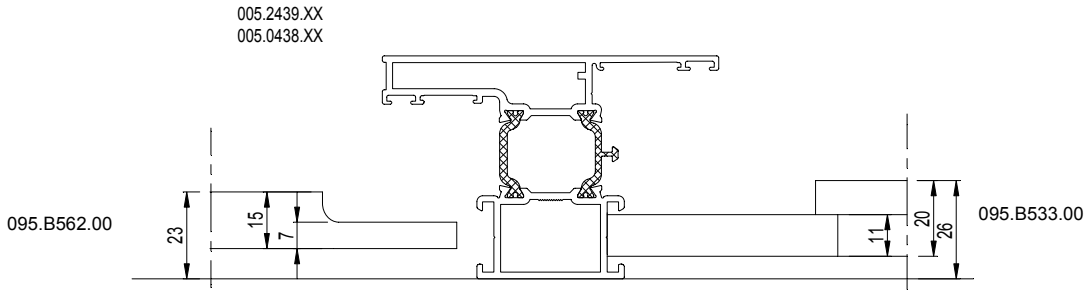

F

D0081651

HOEKENPERS 095.B500.00
SERTISSEUSE 095.B500.00
CRIMPING MACHINE 095.B500.00
ECKVERBINDUNGSMASCHINE 095.B500.00

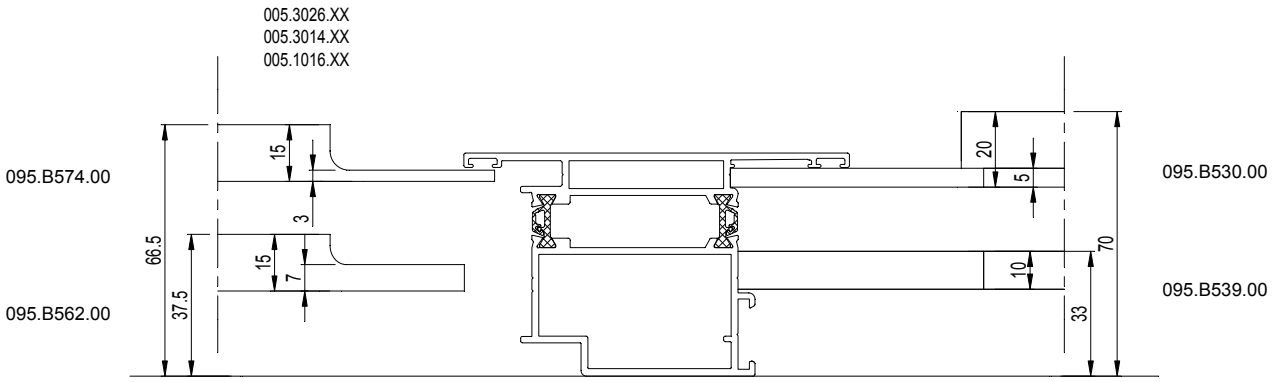

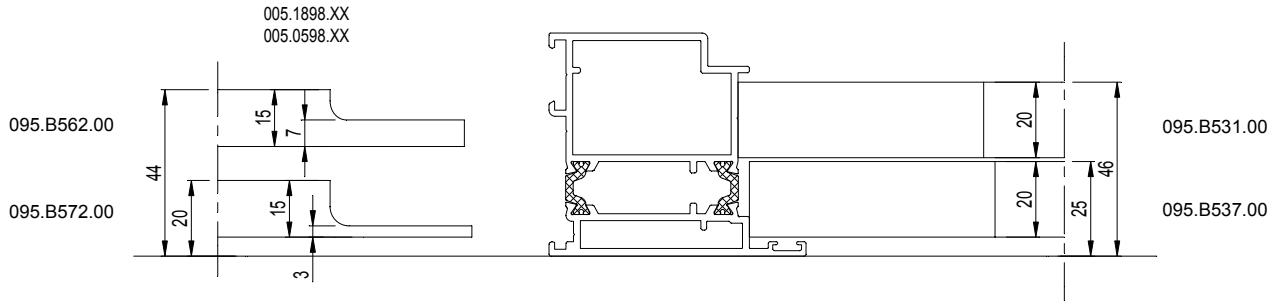

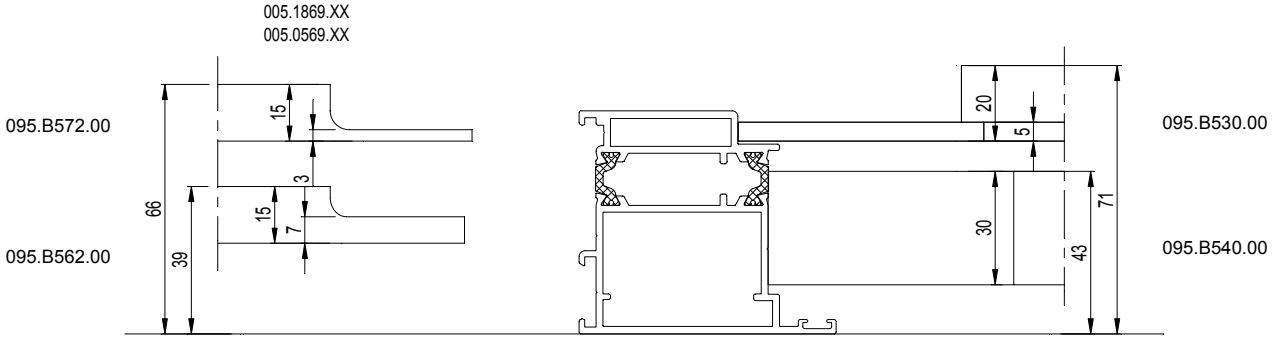

F

D0081652

HOEKENPERS 095.B500.00
SERTISSEUSE 095.B500.00
CRIMPING MACHINE 095.B500.00
ECKVERBINDUNGSMASCHINE 095.B500.00

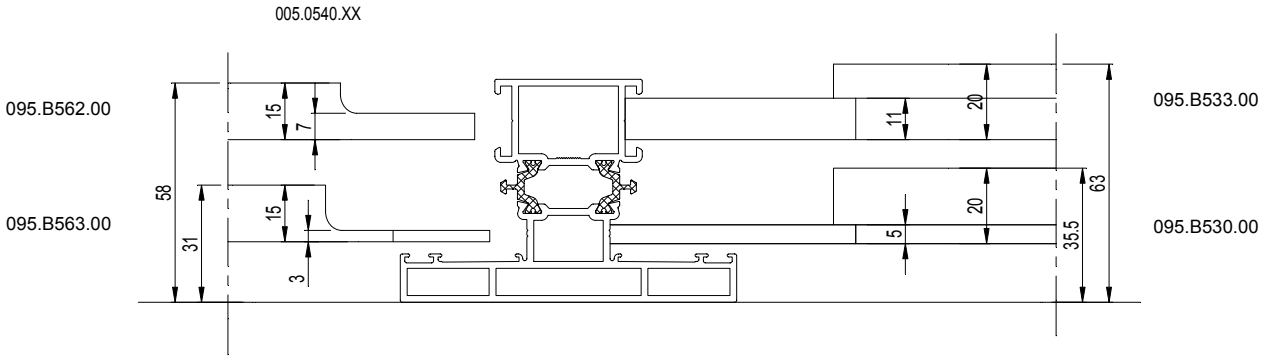

F

D0081653

HOEKENPERS 095.B500.00
SERTISSEUSE 095.B500.00
CRIMPING MACHINE 095.B500.00
ECKVERBINDUNGSMASCHINE 095.B500.00

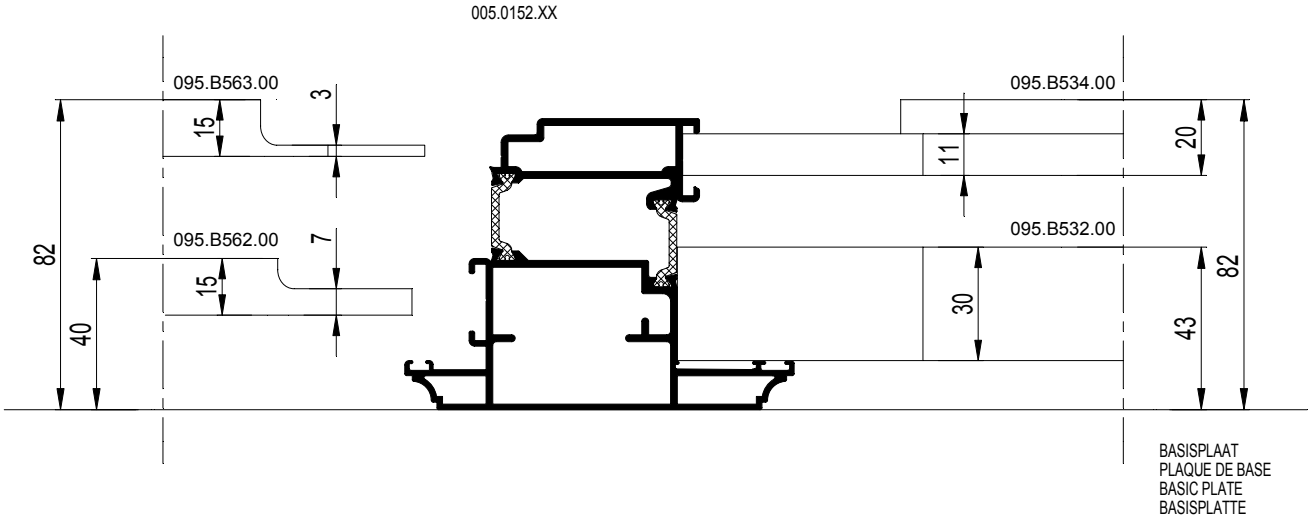

F

D0081653

D0081654

HOEKENPERS 095.30PN.06
SERTISSEUSE 095.30PN.06
CRIMPING MACHINE 095.30PN.06
ECKVERBINDUNGSMASCHINE 095.30PN.06

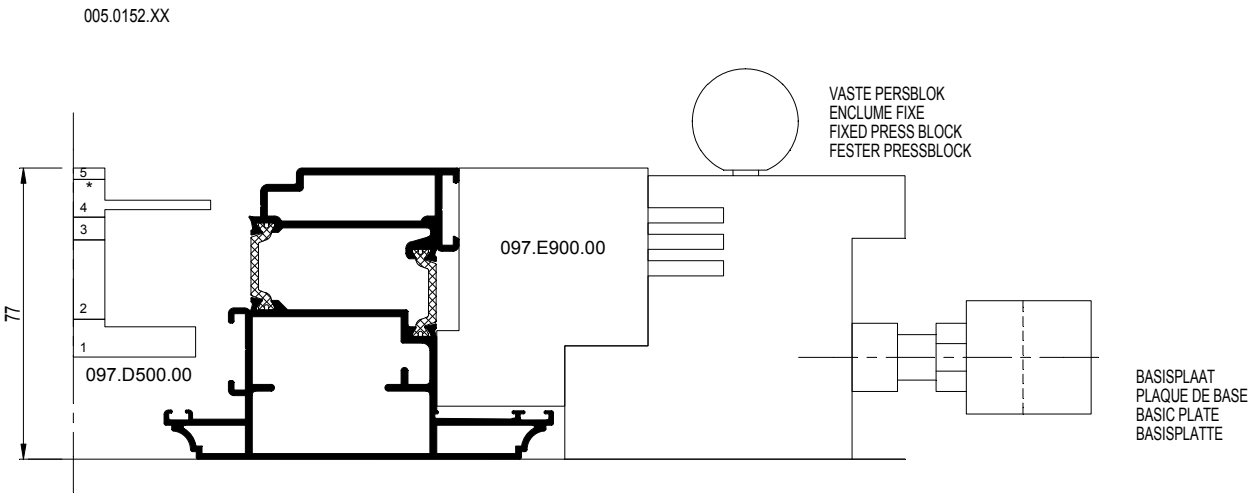

F

D0081654

CS 68-FP
EW 30

SCHROEFHOEKEN
EQUERRES A VISSER
SCREW CORNER CLEATS
SCHRAUBECKWINKEL

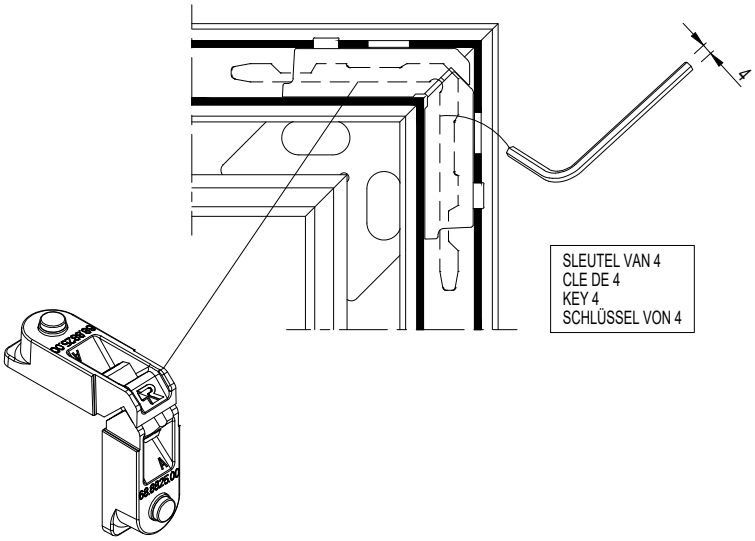

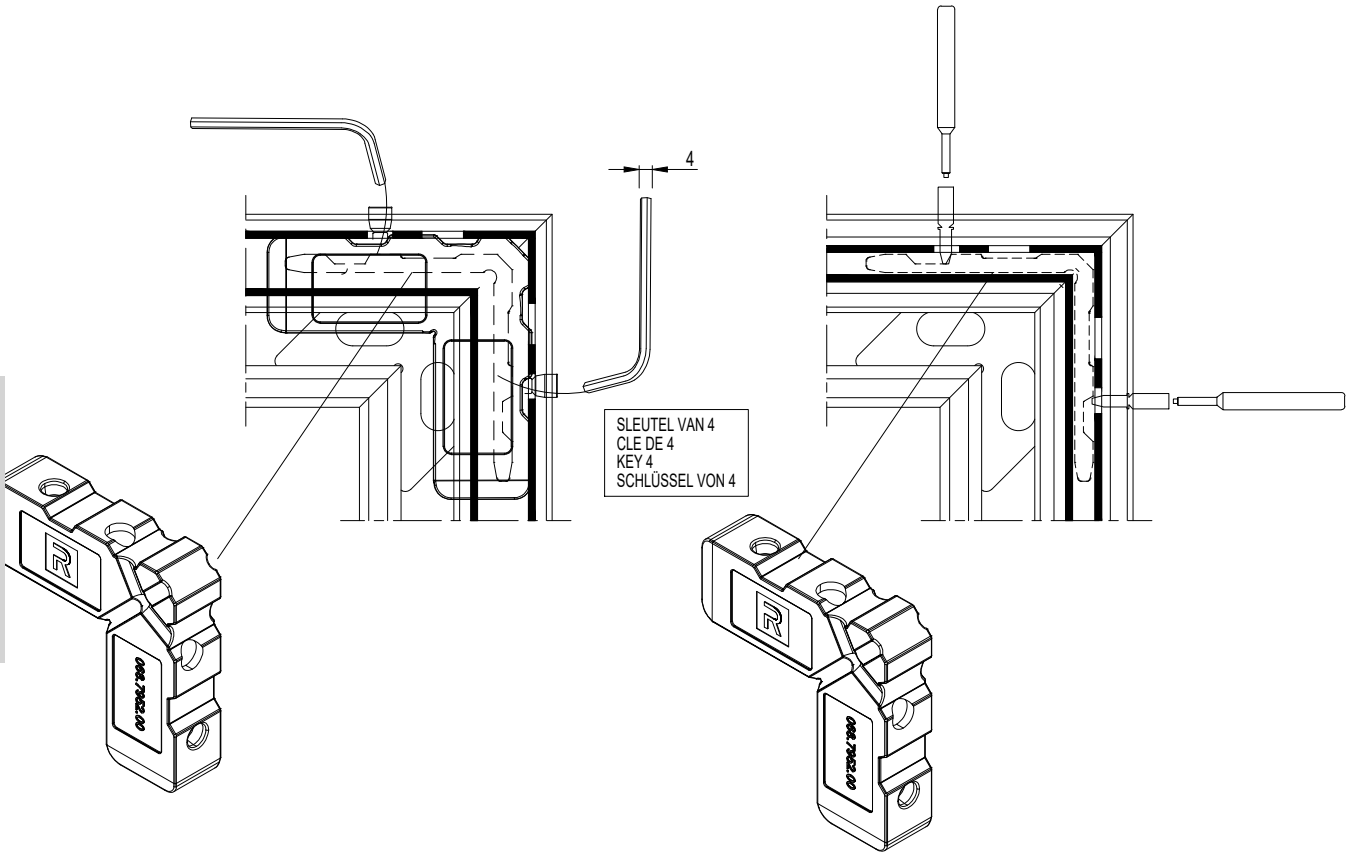

F

BIJKOMENDE INFO VOORBEREIDING/VERWERKING -> RAADPLEEG HOOFDSTUK B !
INFO COMPLEMENTAIRE PREPARATION/USINAGE -> CONSULTEZ CHAPITRE B !
ADDITIONAL INFO PREPARATION/PROCESSING -> CONSULT CHAPTER B !
ZUSAETZLICHE INFO VORBEREITUNG/VERARBEITUNG -> SIEHE KAPITEL B !

schaal - échelle
scale - Maßstab

CS 68-FP
EW 30

SCHROEFHOEKEN
EQUERRES A VISSER
SCREW CORNER CLEATS
SCHRAUBECKWINKEL

095.C500.00	095.C600.00	005.0183.XX 005.0123.XX 005.0125.XX 005.0544.XX 005.0140.XX 005.0525.XX 005.0120.XX 005.1443.XX 005.0111.XX 005.1444.XX 005.0114.XX 005.1451.XX	
	097.P100.00 097.P200.00 097.W900.00		
095.C700.00	097.P100.00 097.P200.00 097.W900.00		
---	---		

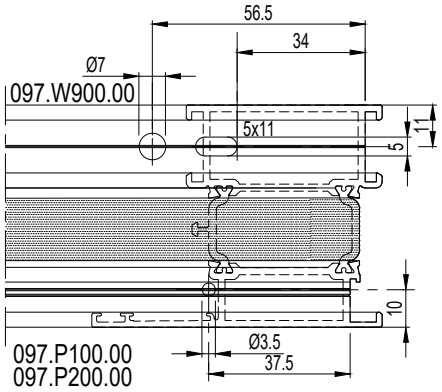

095.C500.00	095.C600.00	005.0192.XX 005.0121.XX 005.0112.XX 005.0052.XX	
	097.P100.00 097.P200.00 097.W900.00		
095.C700.00	097.P100.00 097.P200.00 097.W900.00		
---	---		

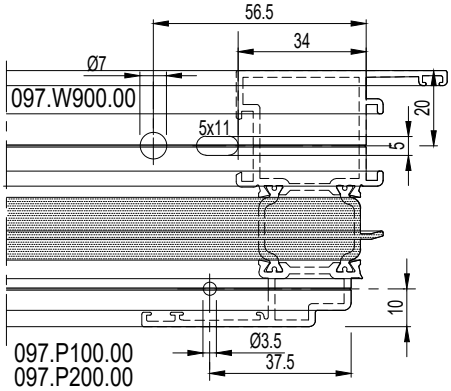

095.C500.00	095.C600.00	005.1216.XX 005.1220.XX 005.1250.XX 005.1271.XX	
	097.P100.00 097.P200.00 097.W900.00		
095.C700.00	097.P100.00 097.P200.00 097.W900.00		
---	---		

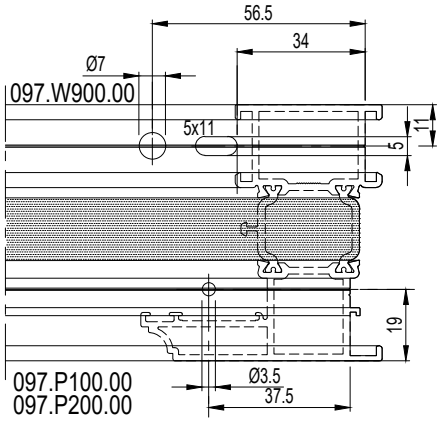

Toegepast voor:
Appliqué pour:
Applied for:
Angewandt bei:

068.8838.00
068.8839.00
068.8840.00
068.8841.00
068.8842.00
068.8843.00
068.8844.00
068.8845.00
068.8847.00

F

schaal - échelle
scale - Maßstab
1/2

CS 68-FP
EW 30

SCHROEFHOEKEN
EQUERRES A VISSER
SCREW CORNER CLEATS
SCHRAUBECKWINKEL

095.C500.00	095.C600.00	005.0292.XX 005.0221.XX 005.0203.XX 005.0252.XX	
	097.P100.00 097.P200.00 097.W900.00		
095.C700.00	097.P100.00 097.P200.00 097.W900.00		
---	---		

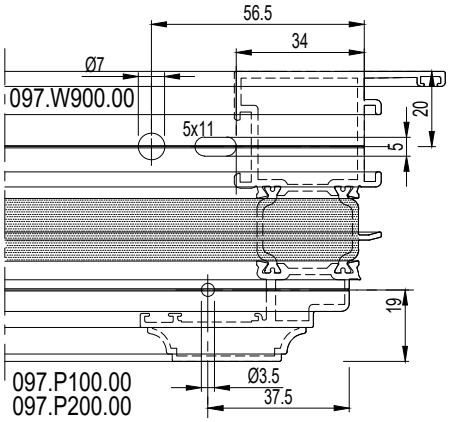

095.C500.00	095.C600.00 097.P000.00 097.O900.00	005.0136.XX 005.0139.XX 005.0141.XX 005.0113.XX 005.1442.XX	
	097.O800.00		
097.0082.00	097.F800.00		

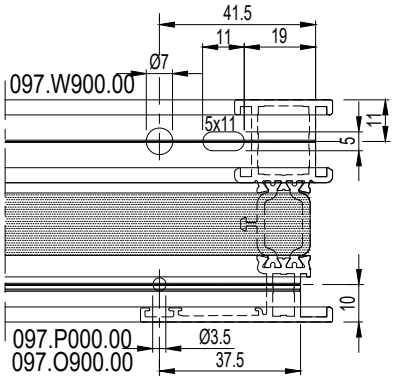

095.C500.00	095.C600.00 097.P000.00 097.O900.00	005.0102.XX	
	097.O800.00		
097.0082.00	097.F800.00		

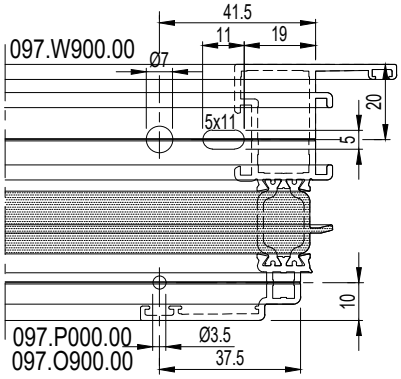

Toegepast voor:
Appliqué pour:
Applied for:
Angewandt bei:

068.8838.00
068.8839.00
068.8840.00
068.8841.00
068.8842.00
068.8843.00
068.8844.00
068.8845.00
068.8847.00

F

schaal - échelle
scale - Maßstab 1/1

12N.F.064
25/05/2021

CS 68-FP
EW 30

SCHROEFHOEKEN
EQUERRES A VISSER
SCREW CORNER CLEATS
SCHRAUBECKWINKEL

	095.C500.00		095.C600.00 097.P000.00 097.O900.00	005.1236.XX 005.1213.XX 005.1249.XX 005.1270.XX
			097.O800.00	
	097.0082.00		097.F800.00	

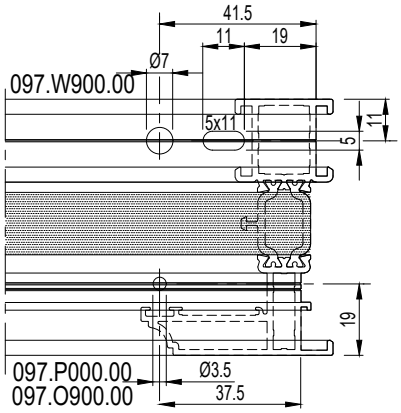

	095.C500.00		095.C600.00 097.P000.00 097.O900.00	005.0202.XX 005.0251.XX
			097.O800.00	
	097.0082.00		097.F800.00	

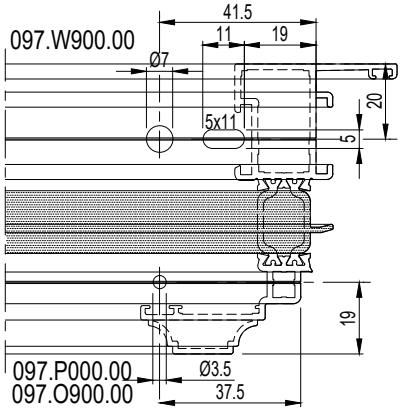

F

schaal - échelle
scale - Maßstab
1/2

CS 68-FP
EW 30

SCHROEFHOEKEN
EQUERRES A VISSER
SCREW CORNER CLEATS
SCHRAUBECKWINKEL

097.0375.00	005.0448.XX 005.0111.XX 005.1449.XX 005.0120.XX 005.1455.XX 005.0114.XX 005.1456.XX 005.0123.XX 005.0183.XX 005.1100.XX 005.0140.XX 005.1109.XX 005.0125.XX 005.1110.XX 005.0544.XX 005.0420.XX 005.0525.XX

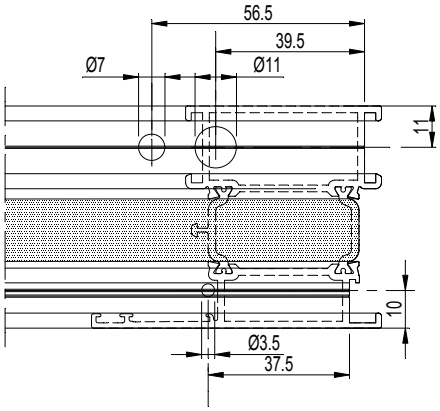

097.0375.00	005.0192.XX 005.0121.XX 005.0112.XX 005.0052.XX

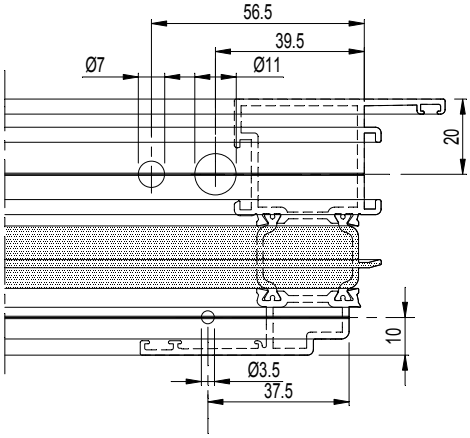

097.0375.00	005.1216.XX 005.1220.XX 005.1250.XX 005.1271.XX

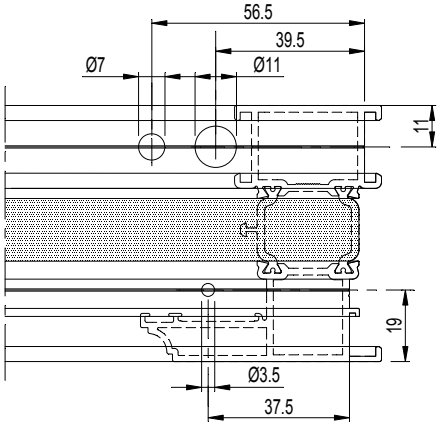

097.0375.00	005.0292.XX 005.0221.XX 005.0203.XX 005.0252.XX

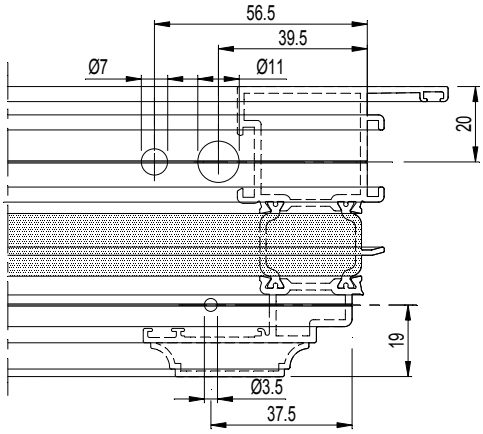

Toegepast voor:
Appliqué pour:
Applied for:
Angewandt bei:

068.8838.00
068.8839.00
068.8840.00
068.8841.00
068.8842.00
068.8843.00
068.8844.00
068.8845.00
068.8847.00

F

schaal - échelle
scale - Maßstab
1/2

D0081658

SCHROEFHOEKEN
EQUERRES A VISSER
SCREW CORNER CLEATS
SCHRAUBECKWINKEL

097.0375.00	005.0144.XX 005.0136.XX 005.0139.XX 005.0113.XX

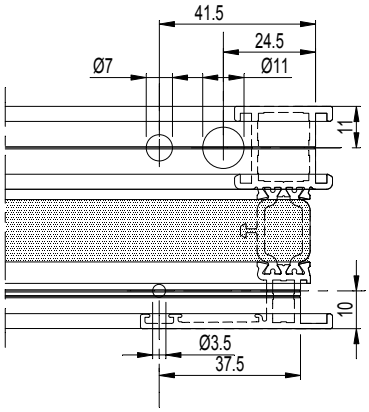

097.0375.00	005.0102.XX

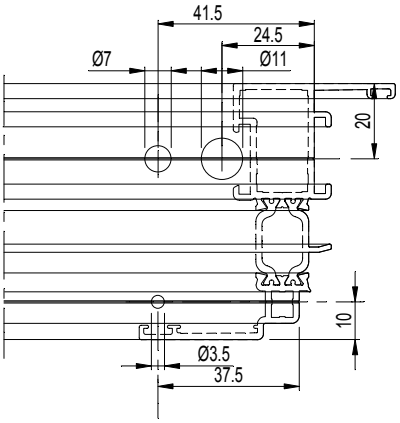

097.0375.00	005.1236.XX 005.1213.XX 005.1249.XX 005.1270.XX

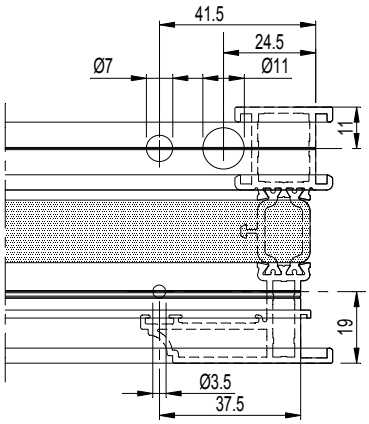

097.0375.00	005.0202.XX 005.0251.XX

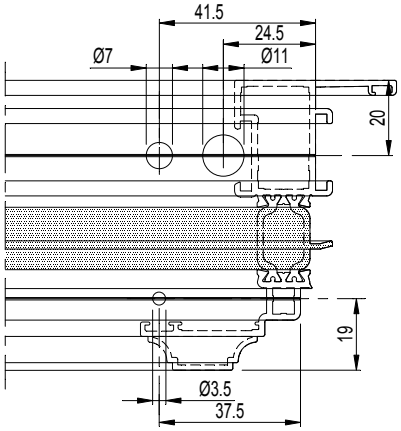

Toegepast voor:
Appliqué pour:
Applied for:
Angewandt bei:

068.8838.00
068.8839.00
068.8840.00
068.8841.00
068.8842.00
068.8843.00
068.8844.00
068.8845.00
068.8847.00

schaal - échelle
scale - Maßstab
1/2

D0081658

F

F

D0081659

SCHROEFHOEKEN
EQUERRES A VISSER
SCREW CORNER CLEATS
SCHRAUBECKWINKEL

095.C500.00		095.C600.00		005.1869.XX 005.1898.XX 005.0569.XX 005.0598.XX
		097.P300.00 097.P500.00		
095.C700.00		097.P300.00 097.P500.00		

068.8805.00
068.8817.00

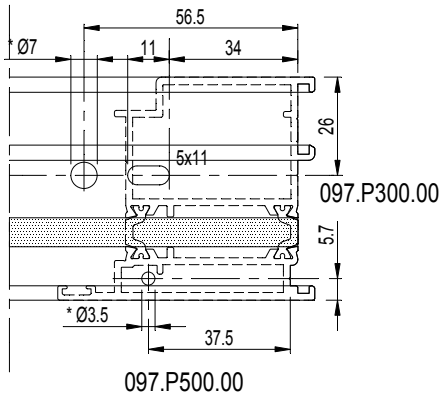

095.C500.00		095.C600.00		005.0569.XX 005.0598.XX
		097.T400.00 097.P500.00		
095.C700.00		097.T400.00 097.P500.00		

068.8807.00

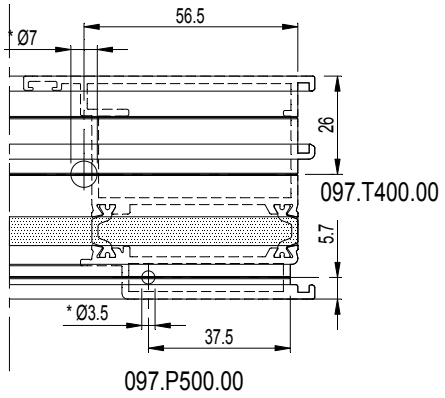

095.C500.00		095.C600.00		005.3014.XX 005.3026.XX 005.1016.XX
		097.P300.00 097.P500.00		
095.C700.00		097.P300.00 097.P500.00		

068.8807.00

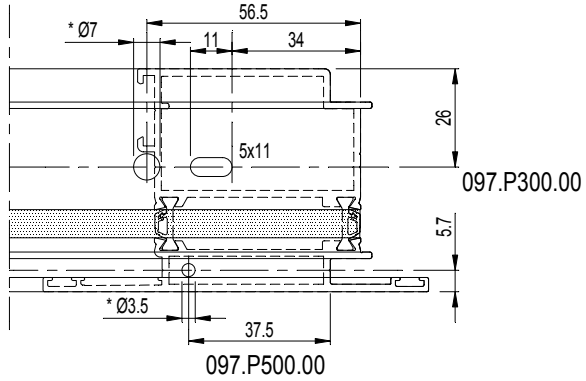

095.C500.00		095.C600.00		005.3014.XX 005.3026.XX 005.1016.XX
		097.T400.00 097.P500.00		
095.C700.00		097.T400.00 097.P500.00		

068.8807.00

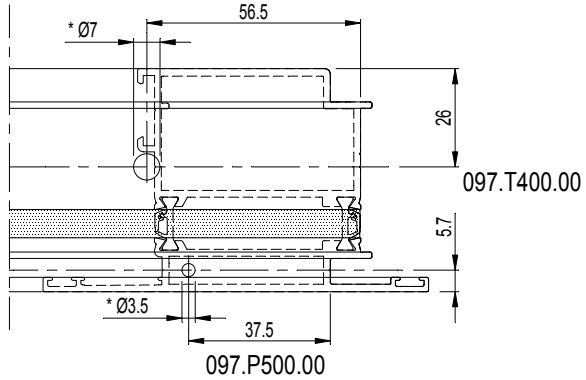

F

D0081659

SCHROEFHOEKEN
EQUERRES A VISSER
SCREW CORNER CLEATS
SCHRAUBECKWINKEL

SBZ 122 SBZ 140	005.0183.XX 005.0125.XX 005.0140.XX 005.0525.XX

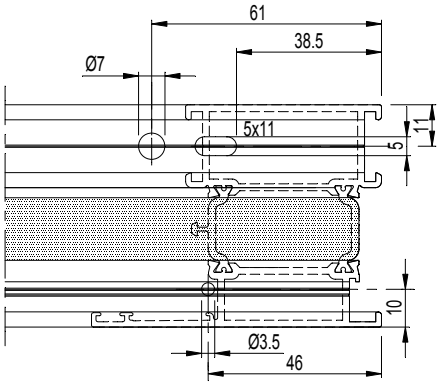

SBZ 122 SBZ 140	005.0120.XX 005.0544.XX 005.1451.XX 005.0114.XX 005.1443.XX 005.0111.XX 005.0123.XX 005.1444.XX

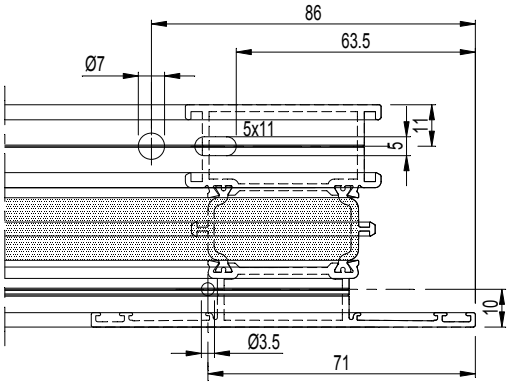

SBZ 122 SBZ 140	005.0192.XX 005.0121.XX 005.0112.XX 005.0052.XX

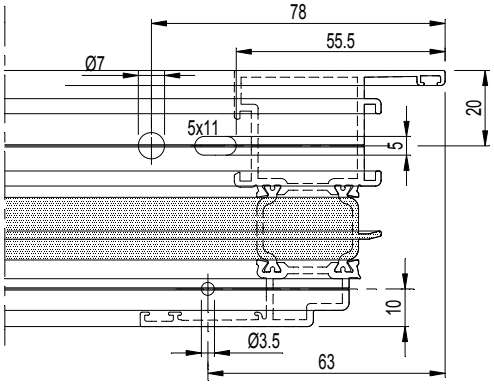

Toegepast voor: Appliqué pour: Applied for: Angewandt bei:	068.8838.00 068.8839.00 068.8840.00 068.8841.00 068.8842.00 068.8843.00 068.8844.00 068.8845.00 068.8847.00

F

schaal - échelle
scale - Maßstab
1/2

D0081660

SCHROEFHOEKEN
EQUERRES A VISSER
SCREW CORNER CLEATS
SCHRAUBECKWINKEL

SBZ 122 SBZ 140	005.1216.XX 005.1250.XX

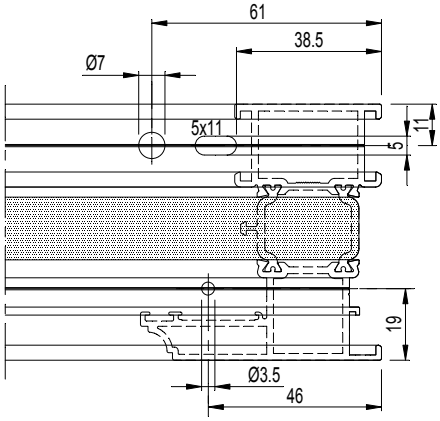

SBZ 122 SBZ 140	005.1220.XX 005.1271.XX

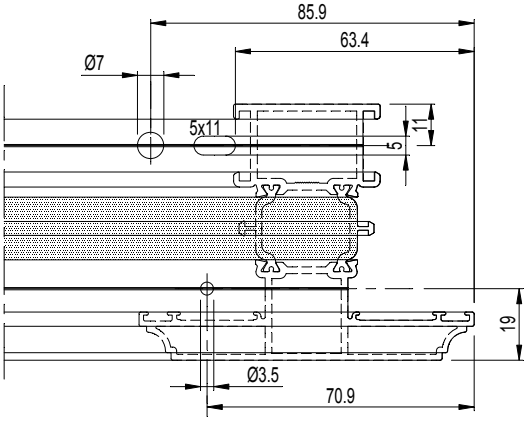

SBZ 122 SBZ 140	005.0292.XX 005.0221.XX 005.0203.XX 005.0252.XX

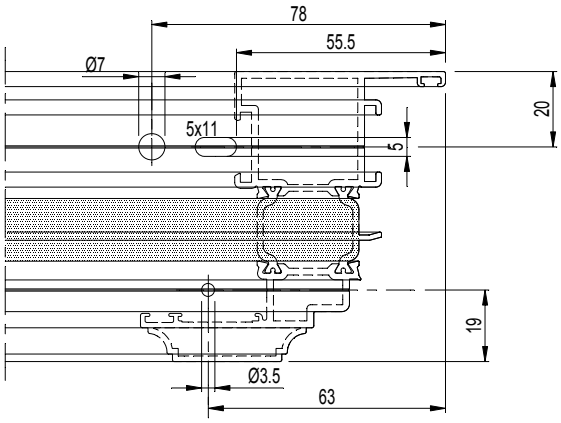

Toegepast voor:
Appliqué pour:
Applied for:
Angewandt bei:

068.8838.00
068.8839.00
068.8840.00
068.8841.00
068.8842.00
068.8843.00
068.8844.00
068.8845.00
068.8847.00

F

schaal - échelle
scale - Maßstab
1/2

D0081660

SCHROEFHOEKEN
EQUERRES A VISSER
SCREW CORNER CLEATS
SCHRAUBECKWINKEL

SBZ 122 SBZ 140	005.0136.XX

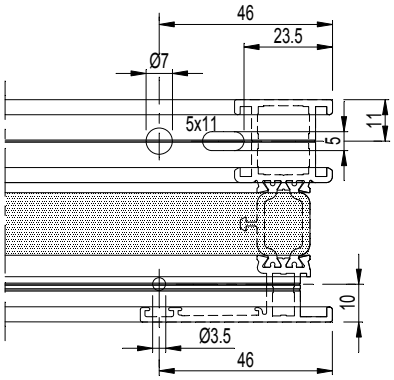

SBZ 122 SBZ 140	005.0139.XX 005.0113.XX 005.0141.XX 005.1442.XX

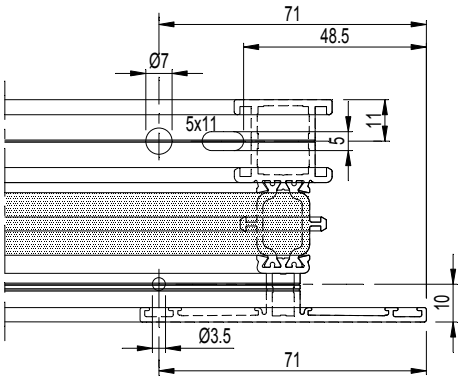

SBZ 122 SBZ 140	005.0102.XX

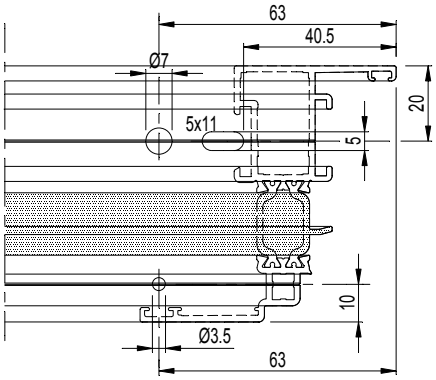

F

schaal - échelle
scale - Maßstab
1/2

D0081661

SCHROEFHOEKEN
EQUERRES A VISSER
SCREW CORNER CLEATS
SCHRAUBECKWINKEL

SBZ 122 SBZ 140	005.1236.XX 005.1249.XX

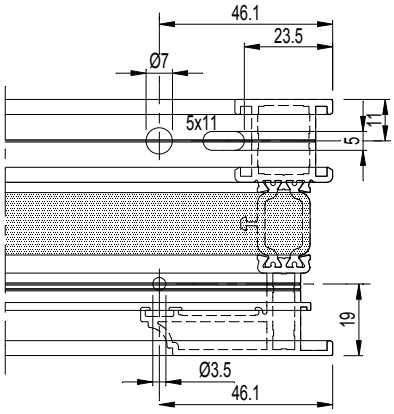

SBZ 122 SBZ 140	005.1213.XX 005.1270.XX

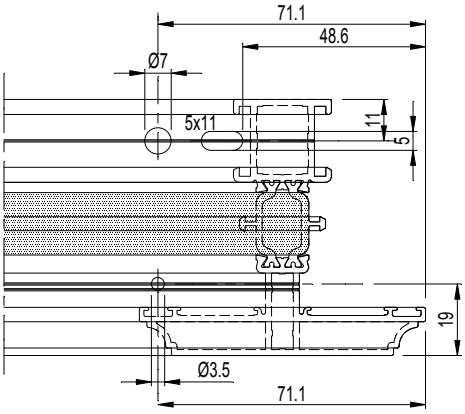

SBZ 122 SBZ 140	005.0202.XX 005.0251.XX

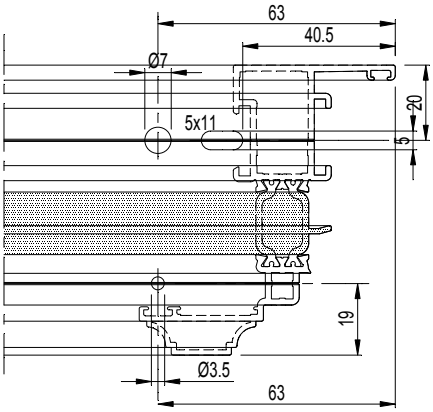

Toegepast voor:
Appliqué pour:
Applied for:
Angewandt bei:

068.8838.00
068.8839.00
068.8840.00
068.8841.00
068.8842.00
068.8843.00
068.8844.00
068.8845.00
068.8847.00

F

schaal - échelle
scale - Maßstab
1/2

D0081661

SCHROEFHOEKEN
EQUERRES A VISSER
SCREW CORNER CLEATS
SCHRAUBECKWINKEL

Reynaers Aluminium

F

schaal - échelle
scale - Maßstab
1/2

D0081662

CS 68-FP
EW 30

SCHROEFHOEKEN
EQUERRES A VISSER
SCREW CORNER CLEATS
SCHRAUBECKWINKEL

SBZ 122 SBZ 140	005.1869.XX 005.1898.XX 005.0569.XX 005.0598.XX

SBZ 122 SBZ 140	005.3014.XX 005.3026.XX 005.1016.XX

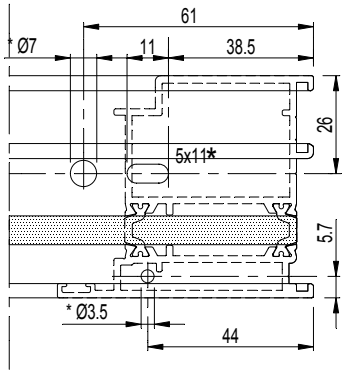

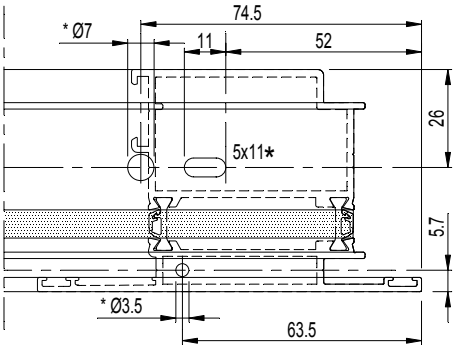

* enkel bij
* seulement pour
* only for
* nur bei

068.8805.00
068.8817.00

F

schaal - échelle
scale - Maßstab
1/2

D0081662

CS 68-FP
EW 30

SCHROEFHOEKEN
EQUERRES A VISSER
SCREW CORNER CLEATS
SCHRAUBECKWINKEL

095.C500.00		095.C600.00		005.0183.XX 005.0123.XX 005.0125.XX 005.0544.XX 005.0140.XX 005.0525.XX 005.0120.XX 005.1443.XX 005.0111.XX 005.1444.XX 005.0114.XX 005.1451.XX
		097.P100.00 097.P200.00 097.W900.00		
095.C700.00		097.P100.00 097.P200.00 097.W900.00		
---		---		

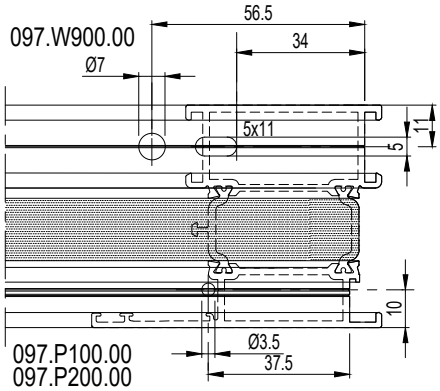

095.C500.00		095.C600.00		005.0192.XX 005.0121.XX 005.0112.XX 005.0052.XX
		097.P100.00 097.P200.00 097.W900.00		
095.C700.00		097.P100.00 097.P200.00 097.W900.00		
---		---		

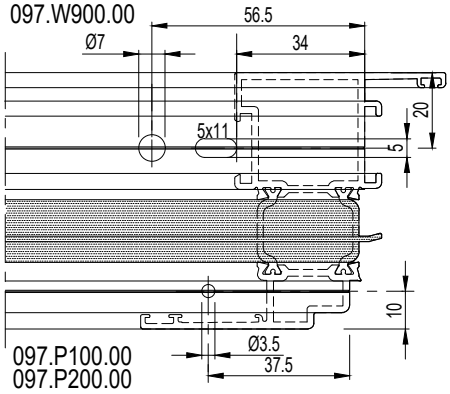

095.C500.00		095.C600.00		005.1216.XX 005.1220.XX 005.1250.XX 005.1271.XX
		097.P100.00 097.P200.00 097.W900.00		
095.C700.00		097.P100.00 097.P200.00 097.W900.00		
---		---		

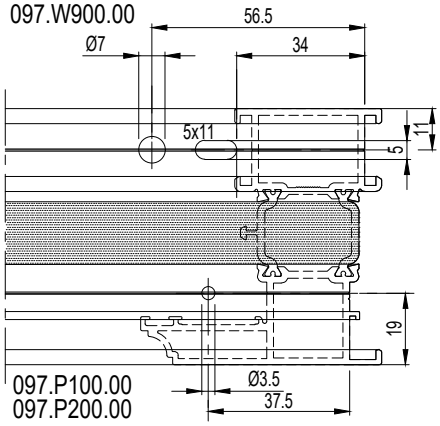

F

Toegepast voor:
Appliqué pour:
Applied for:
Angewandt bei:

EW	068.7850.00
	068.7851.00
	068.7853.00
	068.7854.00
	068.7855.00
	068.7856.00
	068.7857.00
	068.7952.00

schaal - échelle
scale - Maßstab

CS 68-FP
EW 30

SCHROEFHOEKEN
EQUERRES A VISSER
SCREW CORNER CLEATS
SCHRAUBECKWINKEL

	095.C500.00		095.C600.00	005.0292.XX 005.0221.XX 005.0203.XX 005.0252.XX
			097.P100.00 097.P200.00 097.W900.00	
	095.C700.00		097.P100.00 097.P200.00 097.W900.00	
	---		---	

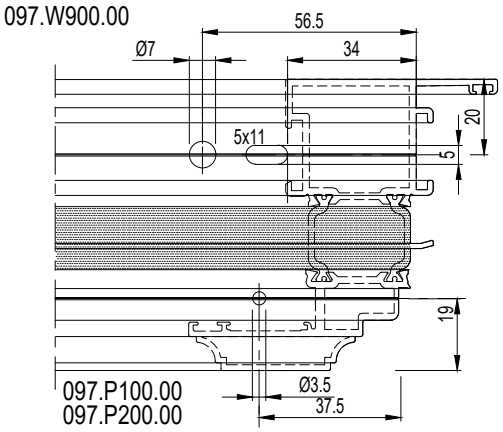

	095.C500.00		095.C600.00 097.P000.00 097.O900.00	005.0136.XX 005.0139.XX 005.0141.XX 005.0113.XX
			097.O800.00	
	097.0082.00		097.F800.00	

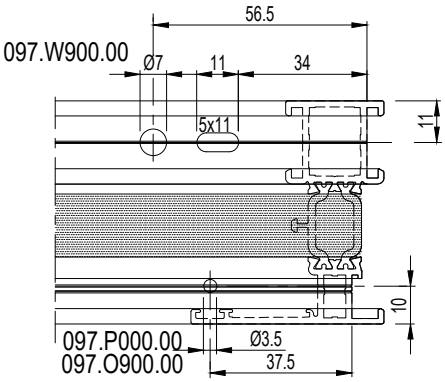

	095.C500.00		095.C600.00 097.P000.00 097.O900.00	005.0102.XX
			097.O800.00	
	097.0082.00		097.F800.00	

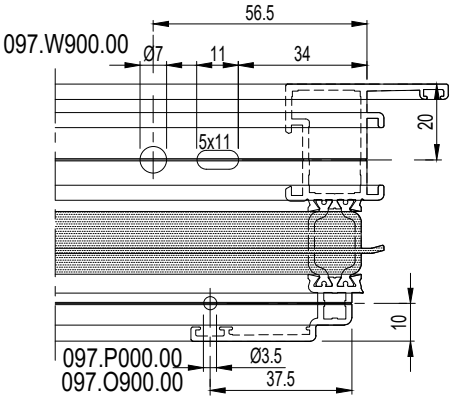

Toegepast voor:
Appliqué pour:
Applied for:
Angewandt bei:

068.7850.00
068.7851.00
068.7853.00
068.7854.00
068.7855.00
068.7856.00
068.7857.00
068.7952.00

schaal - échelle
scale - Maßstab
1/2

SCHROEFHOEKEN
EQUERRES A VISSER
SCREW CORNER CLEATS
SCHRAUBECKWINKEL

CS 68-FP
EW 30

SCHROEFHOEKEN
EQUERRES A VISSER
SCREW CORNER CLEATS
SCHRAUBECKWINKEL

095.C500.00	095.C600.00 097.P000.00 097.O900.00	005.1236.XX 005.1213.XX 005.1249.XX 005.1270.XX
	097.O800.00	
097.0082.00	097.F800.00	

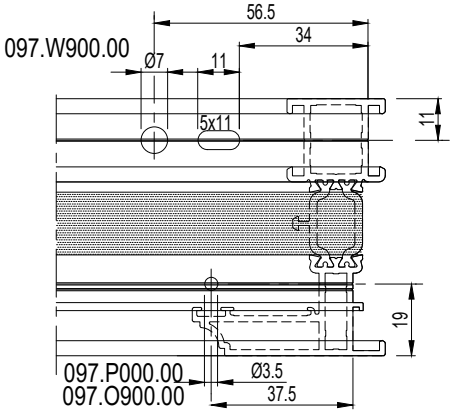

095.C500.00	095.C600.00 097.P000.00 097.O900.00	005.0202.XX 005.0251.XX
	097.O800.00	
097.0082.00	097.F800.00	

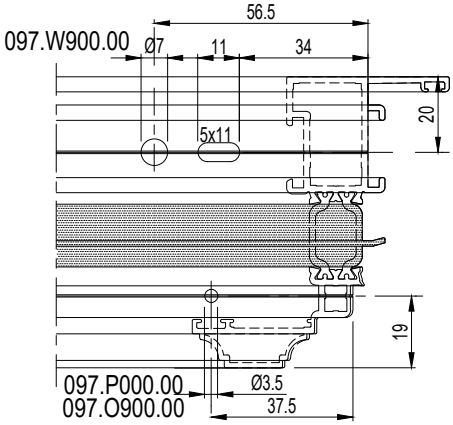

Toegepast voor:
Appliqué pour:
Applied for:
Angewandt bei:

068.7850.00
068.7851.00
068.7853.00
068.7854.00
068.7855.00
068.7856.00
068.7857.00
068.7952.00

F

schaal - échelle
scale - Maßstab
1/2

SCHROEFHOEKEN
EQUERRES A VISSER
SCREW CORNER CLEATS
SCHRAUBECKWINKEL

097.0375.00	005.0448.XX 005.0120.XX 005.0136.XX 005.1449.XX 005.0114.XX 005.0139.XX 005.1455.XX 005.0123.XX 005.0113.XX 005.1456.XX 005.0544.XX 005.0111.XX 005.0183.XX 005.0525.XX 005.0420.XX 005.0140.XX 005.1100.XX 005.0125.XX 005.1109.XX 005.0144.XX 005.1110.XX

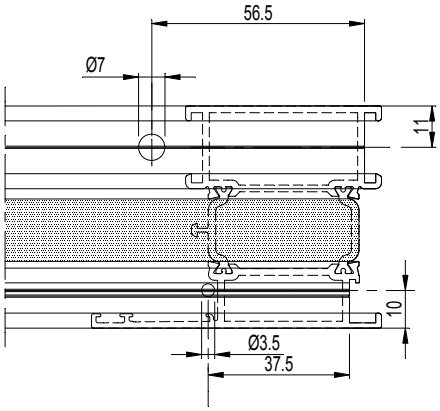

097.0375.00	005.0102.XX 005.0112.XX 005.0121.XX 005.0192.XX 005.0052.XX

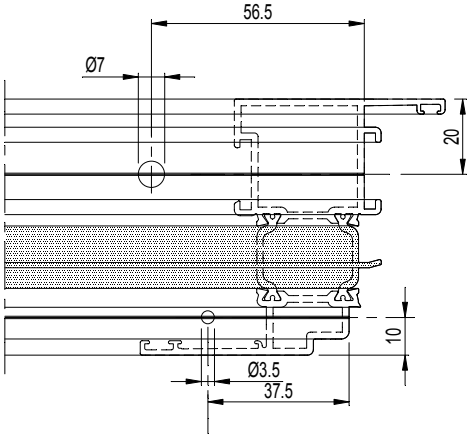

097.0375.00	005.1216.XX 005.1236.XX 005.1220.XX 005.1213.XX 005.1250.XX 005.1249.XX 005.1271.XX 005.1270.XX

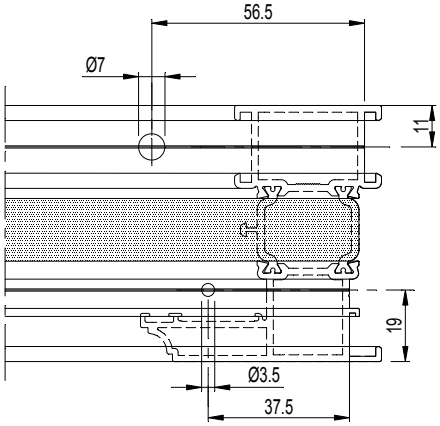

097.0375.00	005.0292.XX 005.0251.XX 005.0221.XX 005.0203.XX 005.0252.XX 005.0202.XX

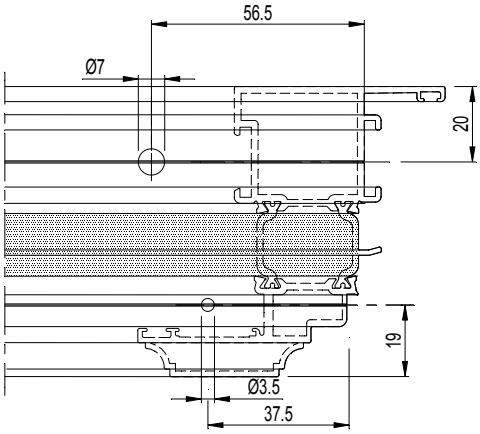

Toegepast voor:
Appliqué pour:
Applied for:
Angewandt bei:

068.7850.00
068.7851.00
068.7853.00
068.7854.00
068.7855.00
068.7856.00
068.7857.00
068.7952.00

schaal - échelle
scale - Maßstab
1/2

D0081670

SCHROEFHOEKEN
EQUERRES A VISSER
SCREW CORNER CLEATS
SCHRAUBECKWINKEL

SBZ 122 SBZ 140	005.0183.XX 005.0125.XX 005.0140.XX 005.0525.XX 005.0136.XX

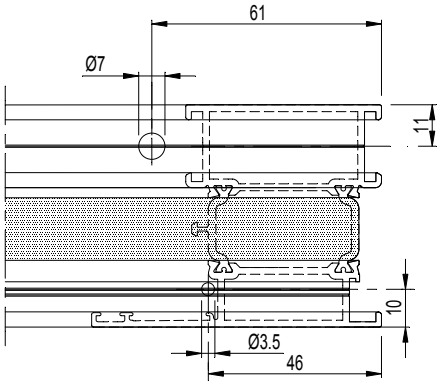

SBZ 122 SBZ 140	005.1216.XX 005.1250.XX 005.1236.XX 005.1249.XX

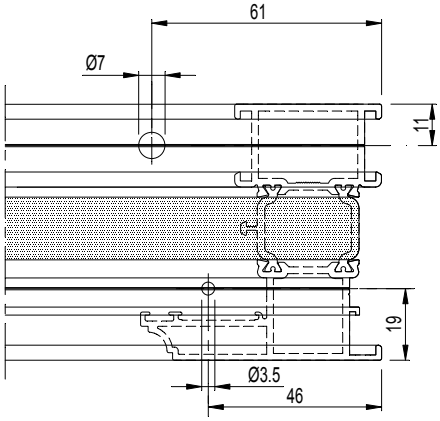

SBZ 122 SBZ 140	005.0120.XX 005.0544.XX 005.1451.XX 005.0114.XX 005.1443.XX 005.0111.XX 005.0123.XX 005.1444.XX 005.0113.XX 005.1442.XX

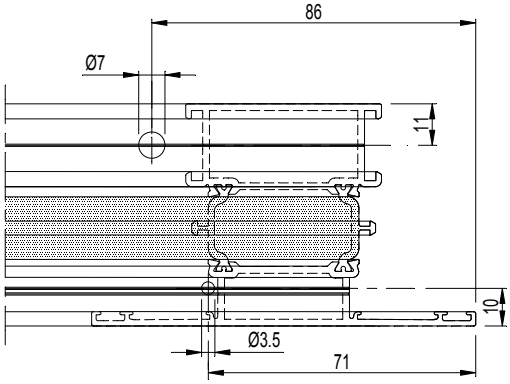

SBZ 122 SBZ 140	005.0102.XX 005.0112.XX 005.0121.XX 005.0192.XX 005.0052.XX

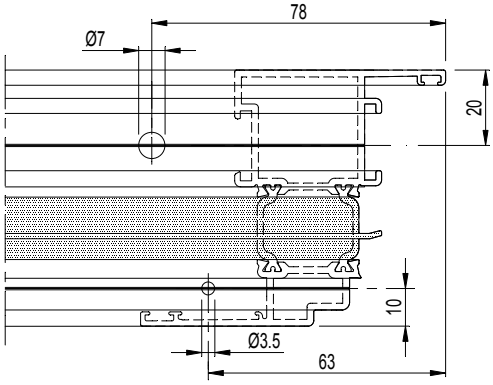

Toegepast voor:
Appliqué pour:
Applied for:
Angewandt bei:

068.7850.00
068.7851.00
068.7853.00
068.7854.00
068.7855.00
068.7856.00
068.7857.00
068.7952.00

F

schaal - échelle
scale - Maßstab
1/2

D0081670

SCHROEFHOEKEN
EQUERRES A VISSER
SCREW CORNER CLEATS
SCHRAUBECKWINKEL

Reynaers Aluminium

F

schaal - échelle
scale - Maßstab
1/2

D0081673

SCHROEFHOEKEN
EQUERRES A VISSER
SCREW CORNER CLEATS
SCHRAUBECKWINKEL

SBZ 122 SBZ 140	005.0292.XX 005.0251.XX 005.0221.XX 005.0203.XX 005.0252.XX 005.0202.XX

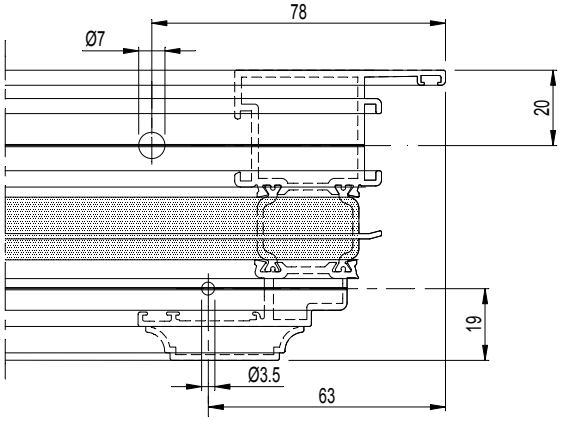

SBZ 122 SBZ 140	005.1220.XX 005.1271.XX 005.1213.XX 005.1270.XX

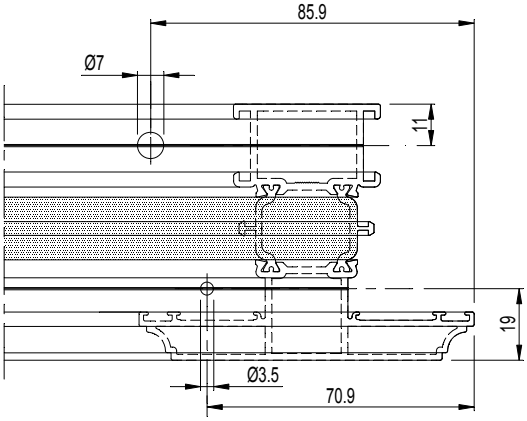

Toegepast voor:
Appliqué pour:
Applied for:
Angewandt bei:

068.7850.00
068.7851.00
068.7853.00
068.7854.00
068.7855.00
068.7856.00
068.7857.00
068.7952.00

F

schaal - échelle
scale - Maßstab
1/2

D0081673

CS 68-FP
EW 30

MONTAGE OPZWELLENDE DICHTING
ASSEMBLAGE JOINT GONFLANT
ASSEMBLY SWELLING GASKET
MONTAGE SCHWELLENDE DICHTUNG

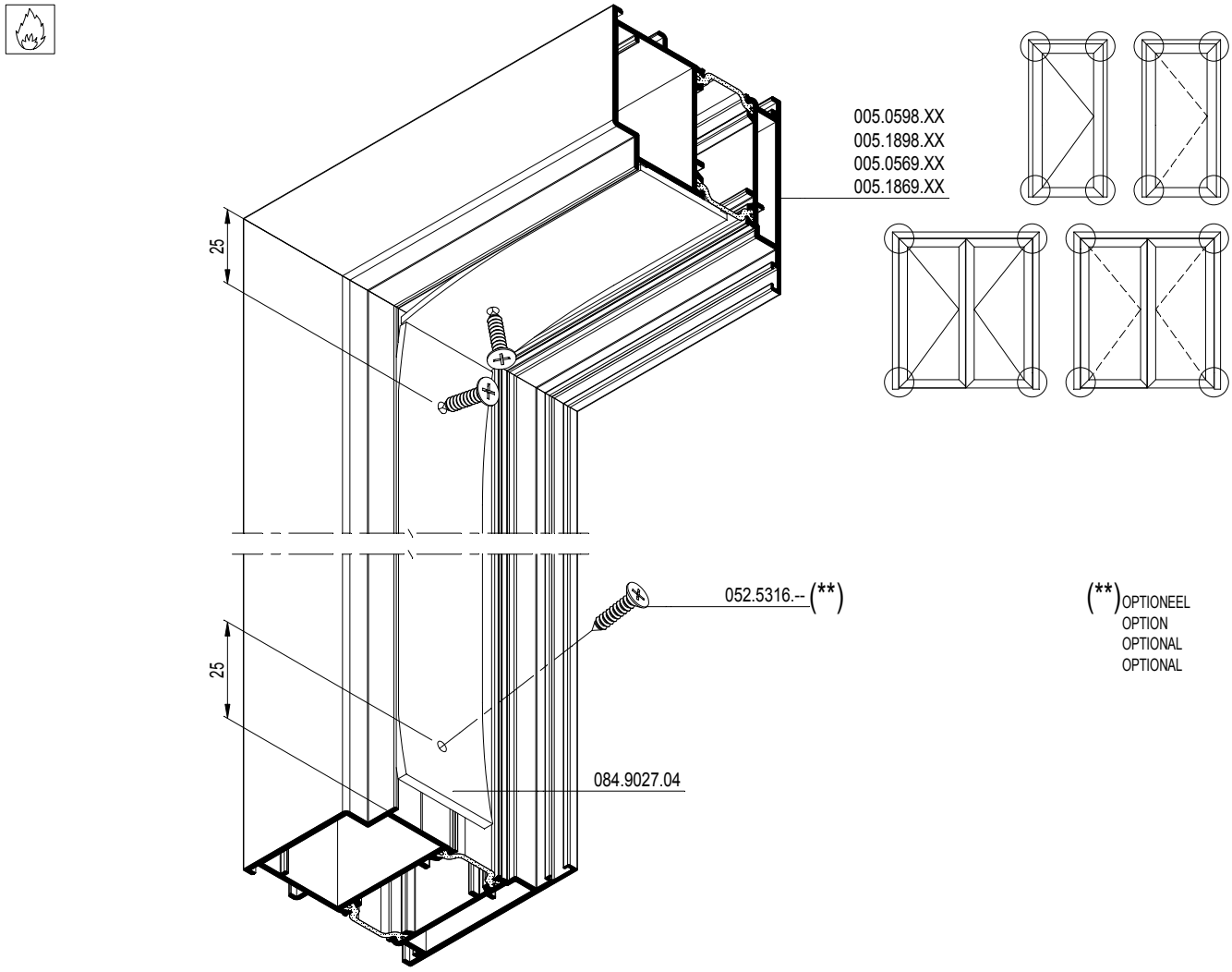

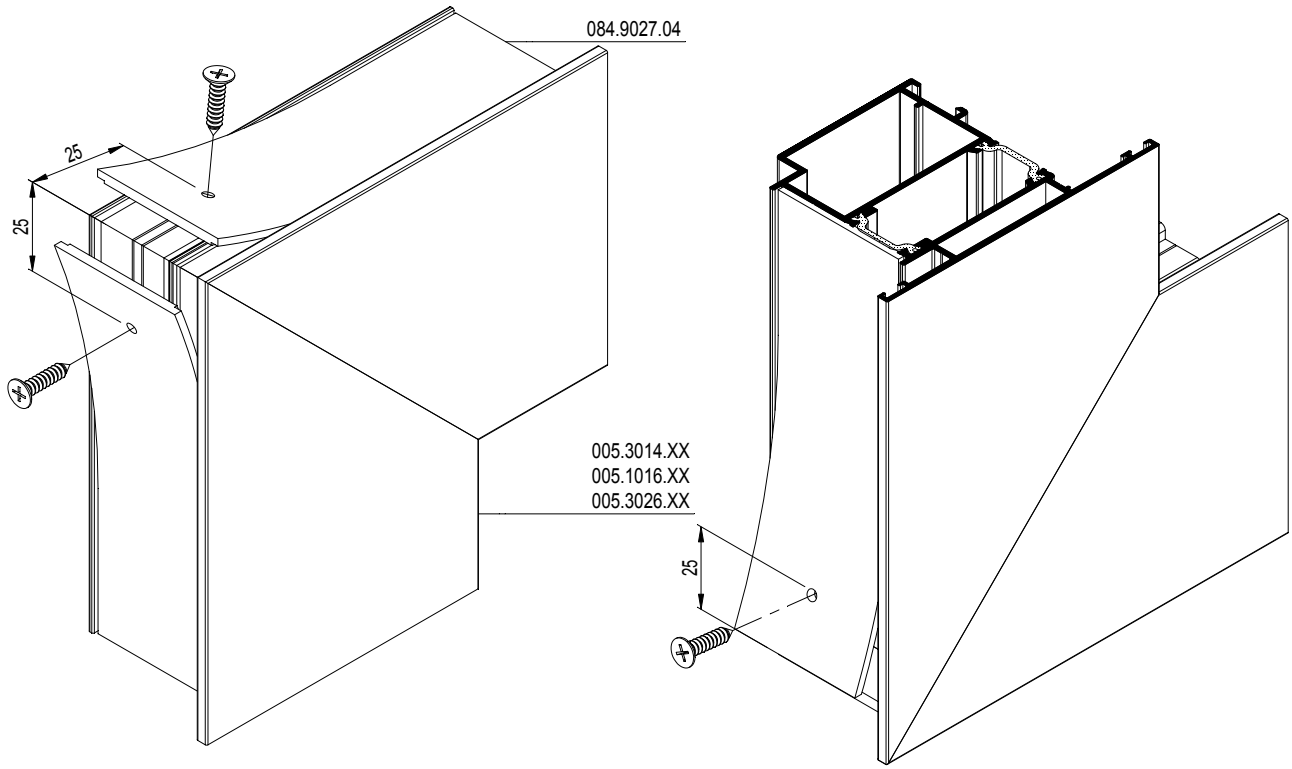

D0081682

F

CS 68-FP
EW 30

MONTAGE OPZWELLENDE DICHTING
ASSEMBLAGE JOINT GONFLANT
ASSEMBLY SWELLING GASKET
MONTAGE SCHWELLENDE DICHTUNG

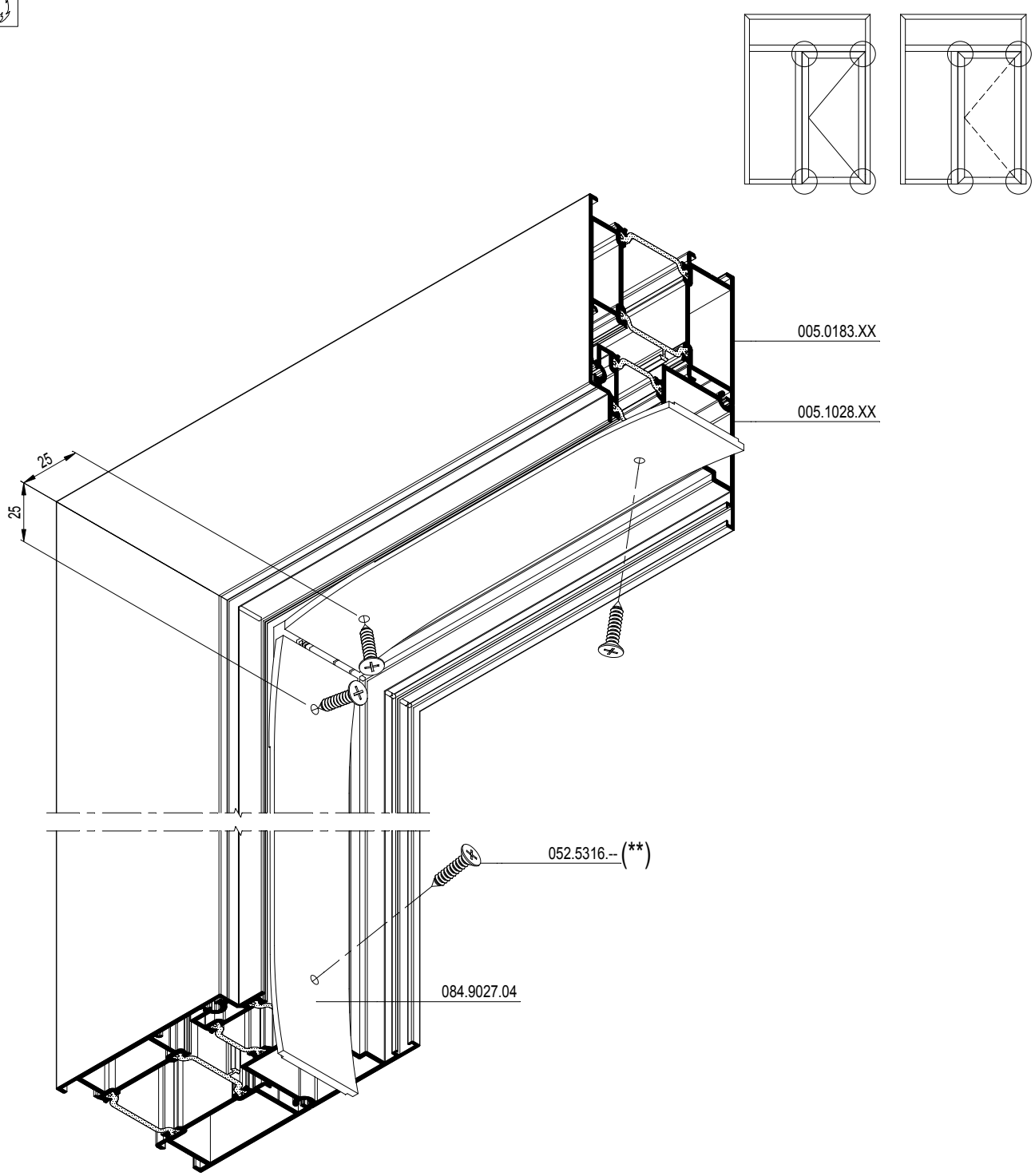

VERLIJMINGSOPPERVLAKTE ONTVETTEN MET REYNAFINISH 60 (ART. NR. 086.9210.--) VOOR HET AANBRENGEN VAN DE OPZWELLENDE DICHTING
DEGRAISSER LA SURFACE A COLLER AVEC REYNAFINISH 60 (ART. NO. 086.9210.--) AVANT D'APPLIQUER LE JOINT GONFLANT
DEGREASE GLUEING SURFACE WITH REYNAFINISH 60 (ART. NR. 086.9210.--) BEFORE APPLYING THE SWELLING GASKET
VERLEIMUNGSOBERFLAECHE ENTFETTEN MIT REYNAFINISH 60 (ART. NR. 086.9210.--) VORHER DIE SCHWELLENDE DICHTUNG ANZUBRINGEN

F

D0081682

BEGLAZINGSMETHODE - BEGLAZINGSBLOKKEN
METHODE DE VITRAGE - COTES DE VITRAGE
GLAZING METHOD - GLAZING BLOCKS
VERGLASUNGSWEISE - VERGLASUNGSKLÖTZEN

HET PLAATSEN VAN BEGLAZINGSBLOKKEN BIJ EEN VAST RAAM

MONTAGE DE COTES DE VITRAGE EN CAS D'UNE FENETRE FIXE

ASSEMBLY OF GLAZING BLOCKS IN CASE OF FIXED WINDOW

MONTAGE VON VERGLASUNGSKLÖTZEN BEI EINEN FESTEN FENSTER

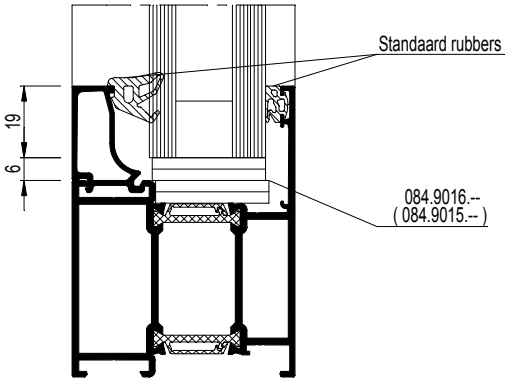

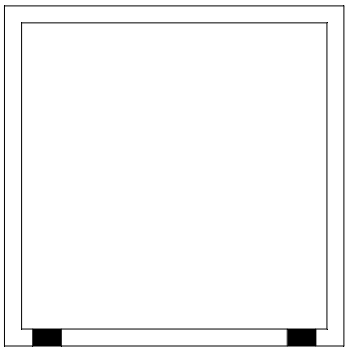

F

D0081683

HET PLAATSEN VAN BEGLAZINGSBLOKKEN BIJ EEN RAAMVLEUGEL

MONTAGE DE COTES DE VITRAGE EN CAS D'OUVRANT PORTE

ASSEMBLY OF GLAZING BLOCKS IN CASE OF WINDOW VENT

MONTAGE VON VERGLASUNGSKLÖTZEN BEI EINEN FENSTERFLÜGEL

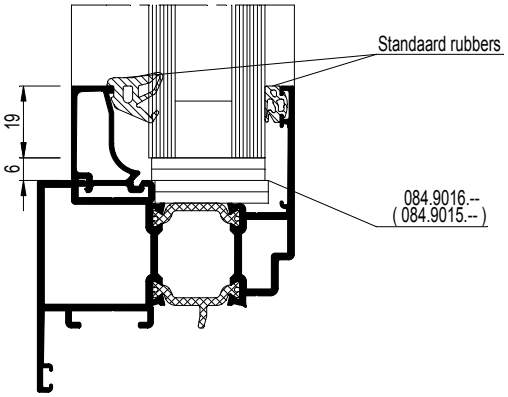

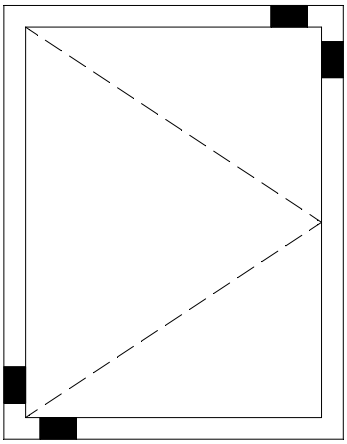

HET PLAATSEN VAN BEGLAZINGSBLOKKEN BIJ EEN DEURVLEUGEL

MONTAGE DE COTES DE VITRAGE EN CAS D'OUVRANT PORTE

ASSEMBLY OF GLAZING BLOCKS IN CASE OF DOOR VENT

MONTAGE VON VERGLASUNGSKLÖTZEN BEI EINEN TÜRFLÜGEL

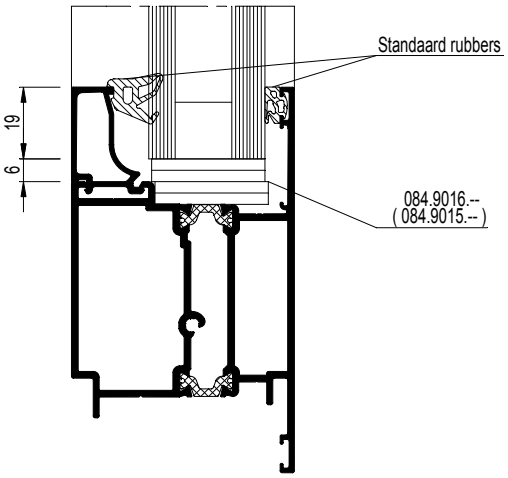

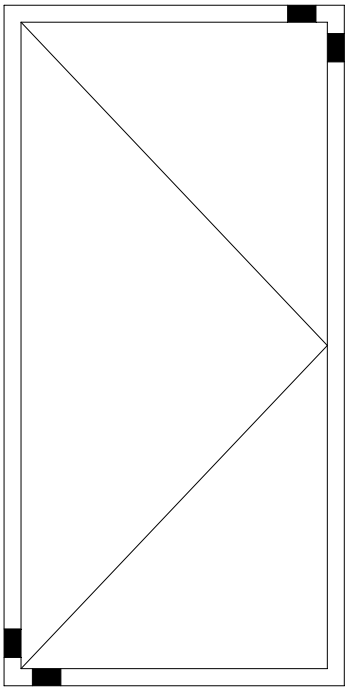

F

D0081683

BEGLAZINGSMETHODE - GLASKLIPSEN
METHODE DE VITRAGE - CLIPPES DE VITRAGE
GLAZING METHOD - GLAZING CLIPS
VERGLASUNGSWEISE - GLASKLEMMEN

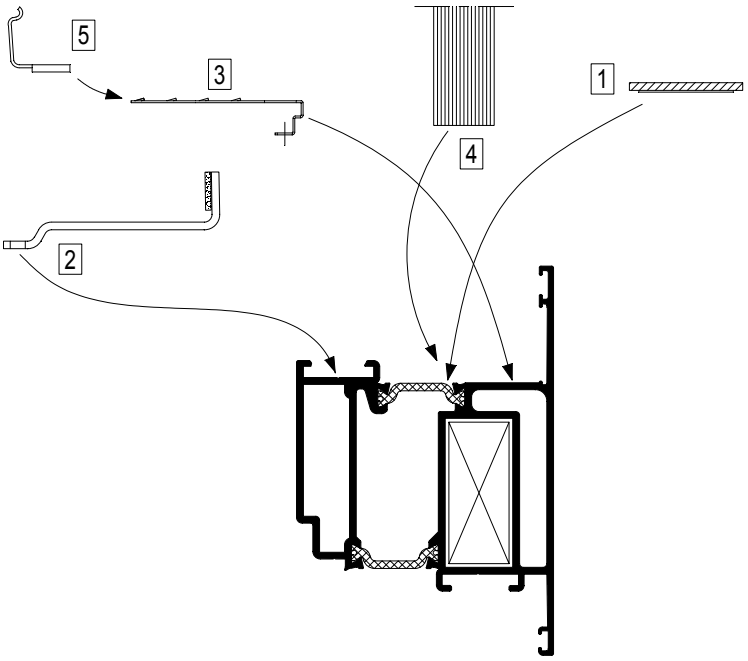

MONTAGEVOLGORDE L'ORDRE DE MONTAGE THE ORDER OF ASSEMBLY MONTAGEREIHENFOLGE	1	2	3	.

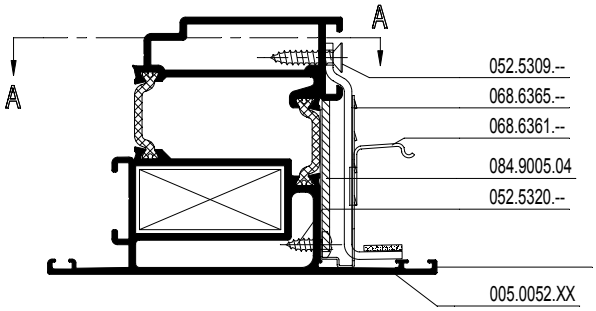

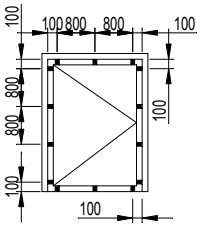

Tussenafstand glasklipsen max. 800mm
Distance intermédiaire clippes de vitrage max 800mm
Max intermediate distance glazing clips 800mm
Maximalzwischen Abstand Glasklemmen 800mm

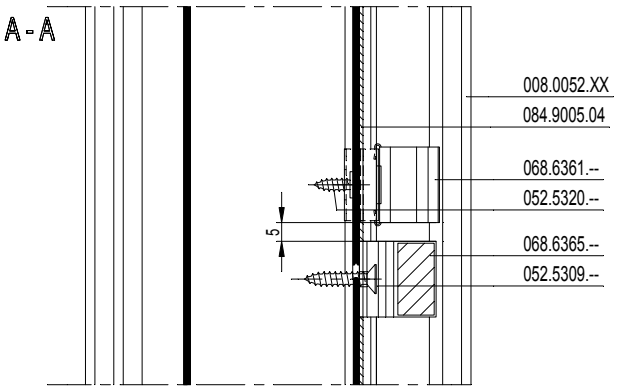

F

D0081684

Brandwerende glasklipsen voor binnenzijde
Clippes de vitrage anti-feu pour interieur
Fire proof glazing clips for inside
Feuerhemmende Glasklemmen Innenseite

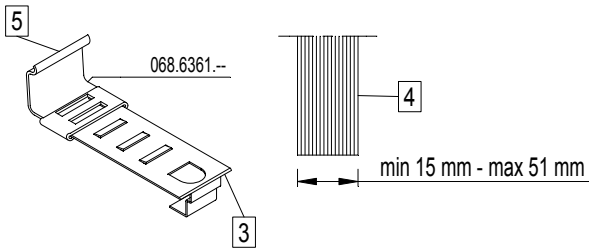

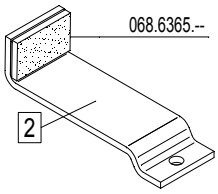

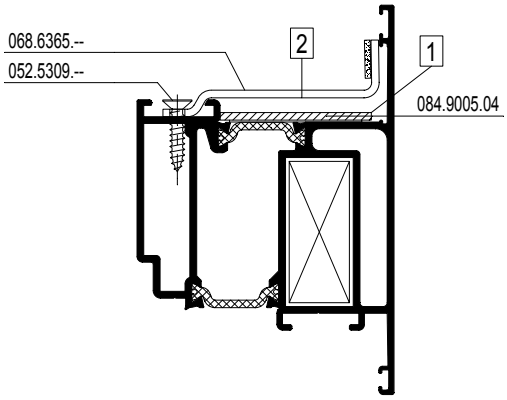

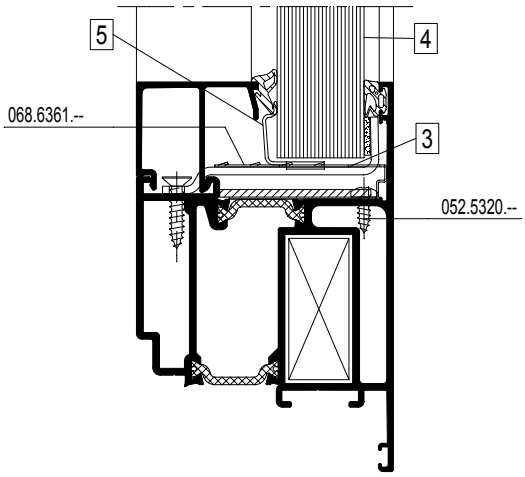

F

D0081684

BEGLAZINGSMETHODE - GLASKLIPSEN
METHODE DE VITRAGE - CLIPPES DE VITRAGE
GLAZING METHOD - GLAZING CLIPS
VERGLASUNGSWEISE - GLASKLEMMEN

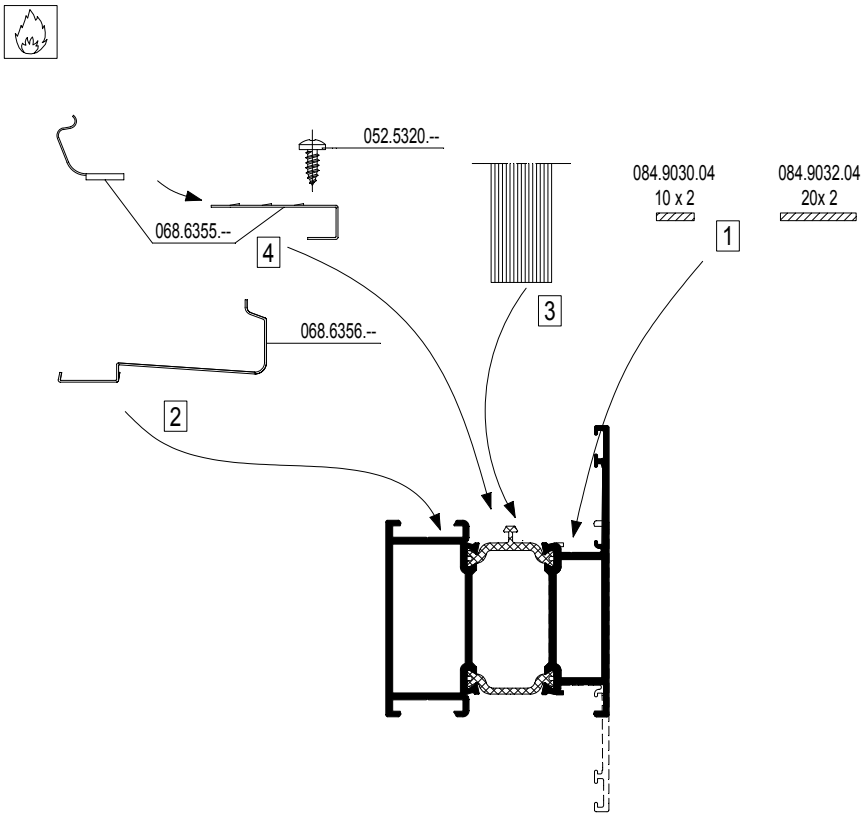

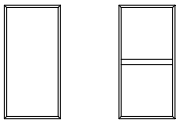

MONTAGEVOLGORDE
L'ORDRE DE MONTAGE
THE ORDER OF ASSEMBLY
MONTAGEREIHENFOLGE

1 2 3 .

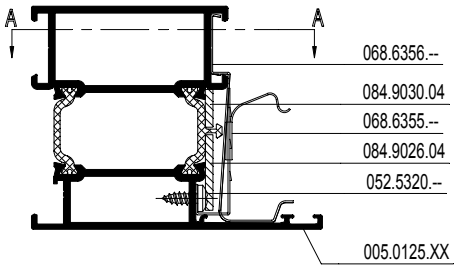

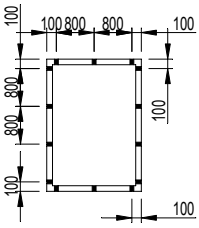

Tussenafstand glasklipsen max. 800mm
Distance intermédiaire clippes de vitrage max 800mm
Max intermediate distance glazing clips 800mm
Maximalzwischen Abstand Glasklemmen 800mm

A - A

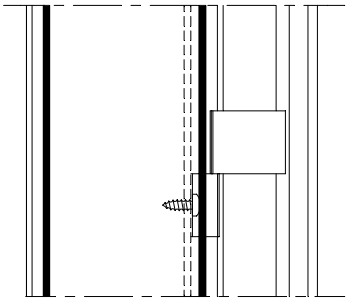

F

D0081685

Brandwerende glasklipsen voor binnenzijde
Clippes de vitrage anti-feu pour interieur
Fire proof glazing clips for inside
Feuerhemmende Glasklemmen Innenseite

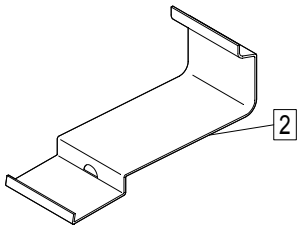

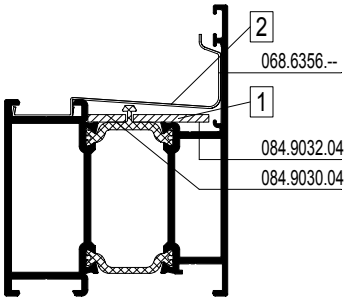

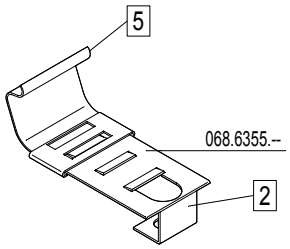

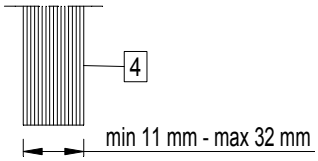

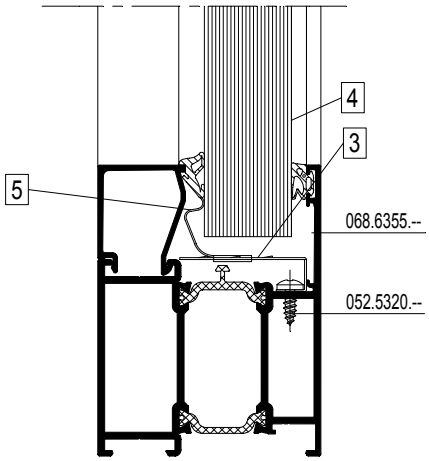

F

D0081685

BEGLAZINGSMETHODE
METHODE DE VITRAGE
GLAZING METHOD
VERGLASUNGSWEISE

030.3644.XX	

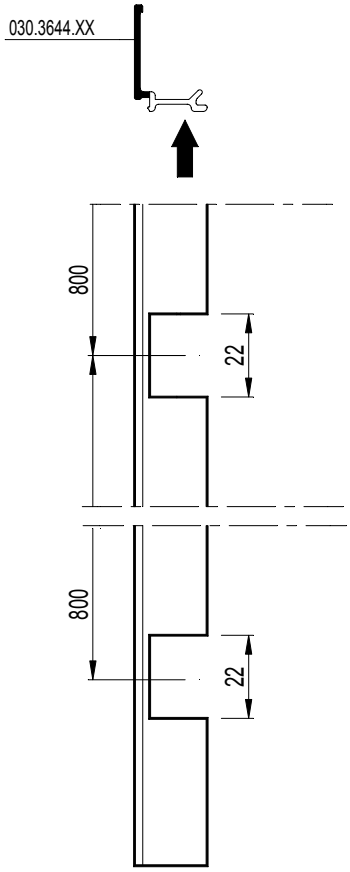

F

D0081686

---	---	---
030.3606.XX	030.3613.XX	030.3630.XX
030.3607.XX	030.3614.XX	030.3631.XX
030.3608.XX	030.3615.XX	030.3632.XX
030.3609.XX	030.3616.XX	030.3633.XX
030.3610.XX	030.3617.XX	030.3634.XX
030.3611.XX	030.3628.XX	030.3635.XX
030.3612.XX	030.3629.XX	

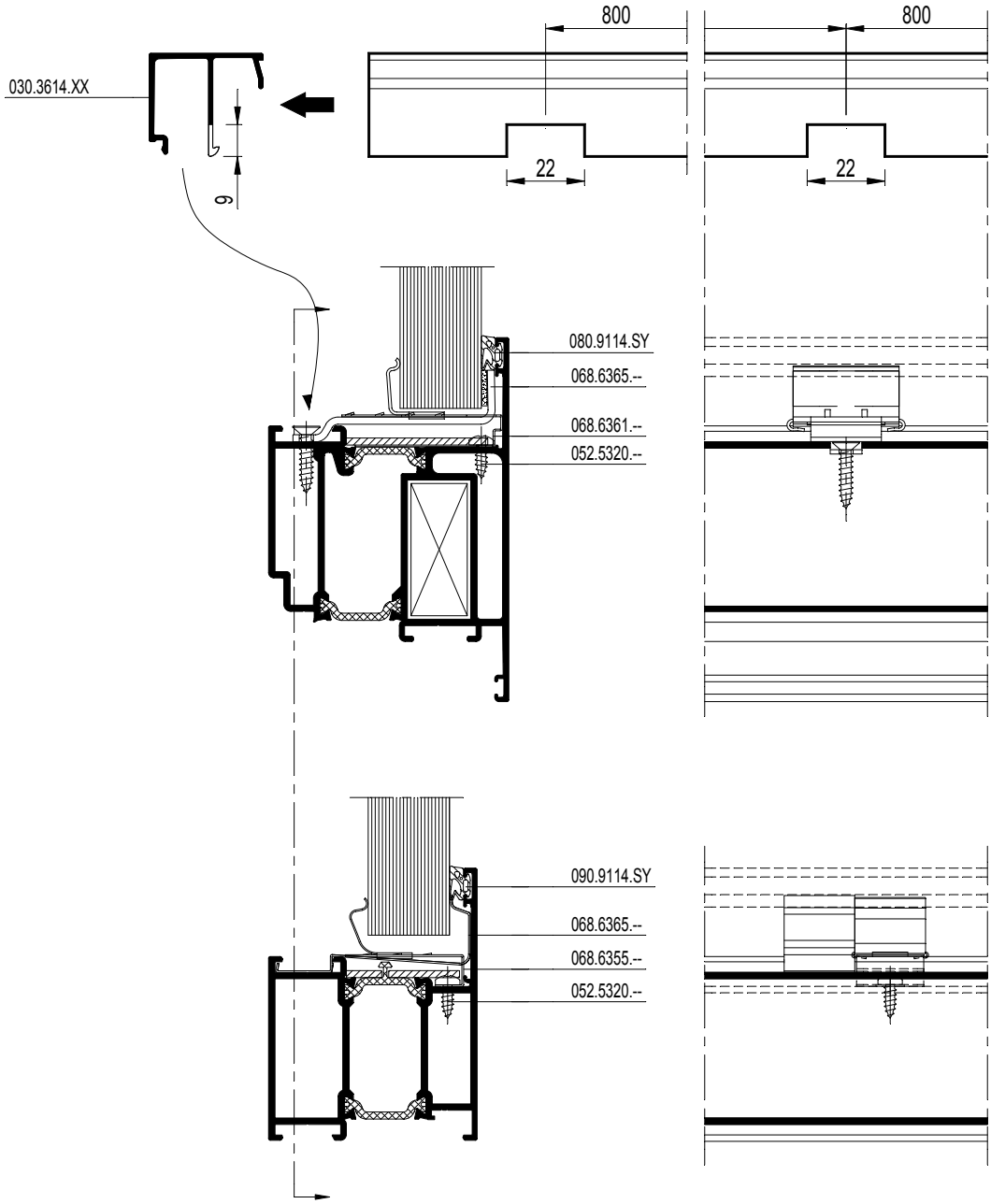

F

D0081686

CS 68-FP
EW 30

RAAMDEUR NAAR BINNENDRAAIEND
PORTE-FENETRE OUVRANT VERS L'INTERIEUR
WINDOW-DOOR INWARD OPENING
FENSTERTUER NACH INNEN OEFFNEND

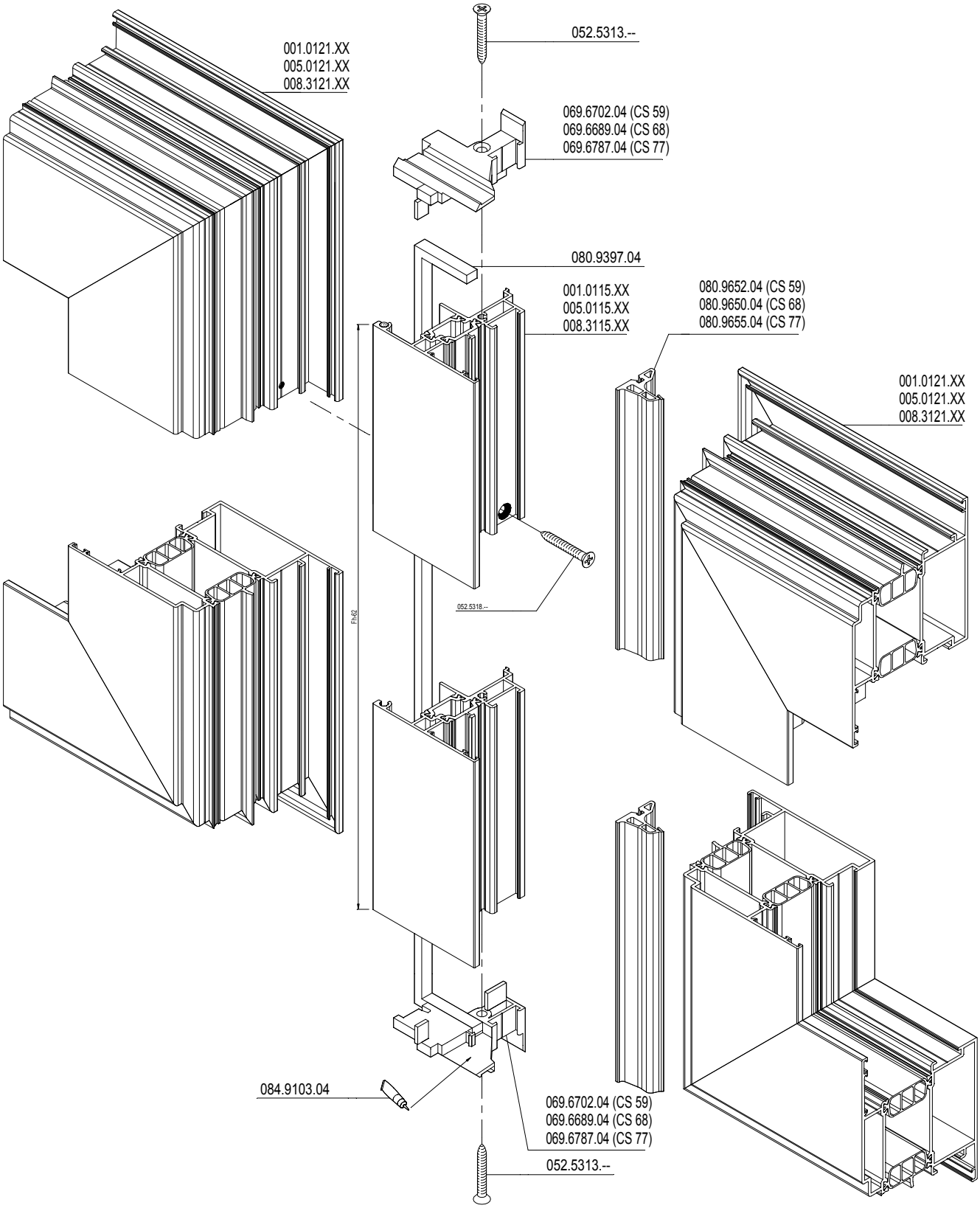

F

D0081687

RAAMDEUR NAAR BINNENDRAAIEND
PORTE-FENETRE OUVRANT VERS L'INTERIEUR
WINDOW-DOOR INWARD OPENING
FENSTERTUER NACH INNEN OEFFNEND

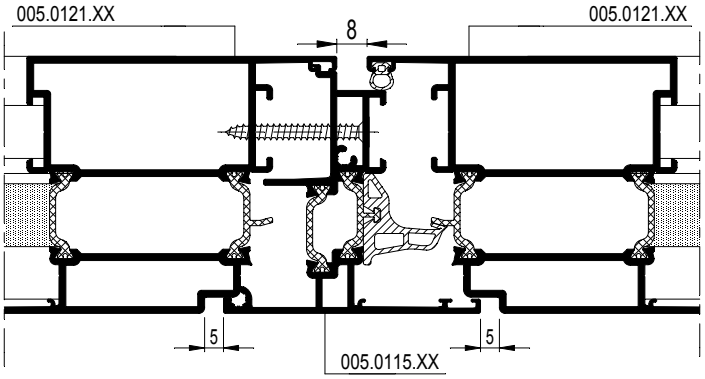

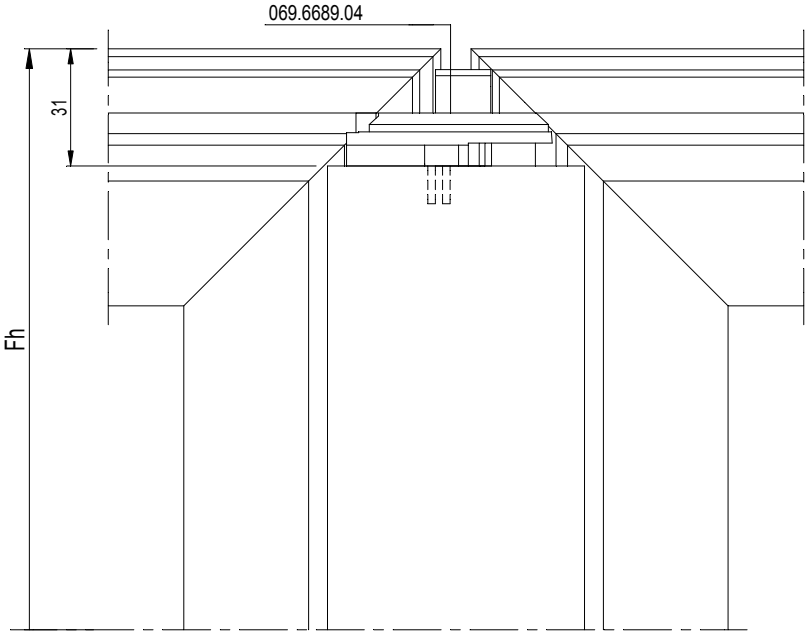

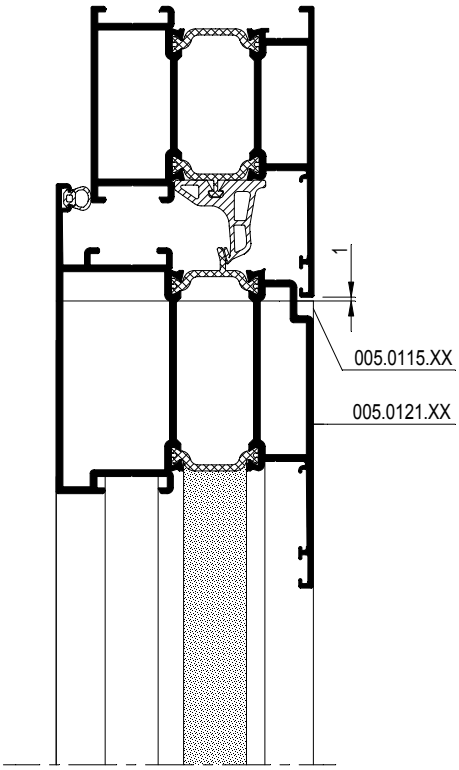

GEBRUIK VAN SLUITLATTEN VOOR SLUITING STOLPVLEUGEL
EMPLOY DE TRINGLE POUR VERROUILLAGE FENÊTRE DOUBLE OUVRANTE
USE OF LINKBAR FOR CLOSURE DOUBLE CASEMENT WINDOW
ANWENDUNG NUR MIT STULPFLUEGELVERSCHLUSS

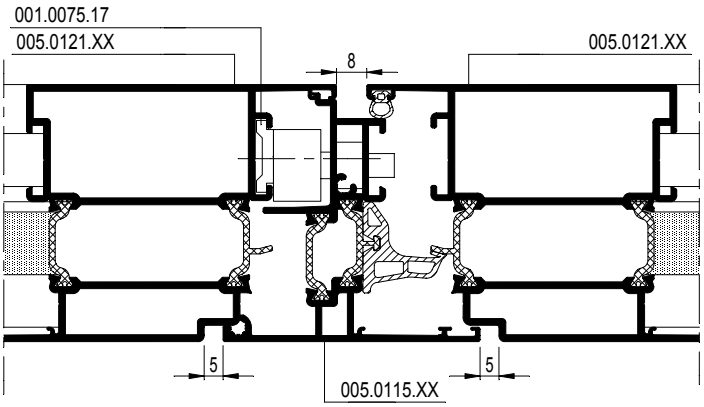

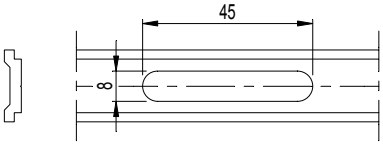

F

D0081687

OVERZICHT DEUREN
APERCU PORTES
OVERVIEW DOORS
UEBERSICHT TUEREN

Tabel verwijst naar hoofdstuk F: Assemblage van deuren
Tableau se réfèrent au Chapitre F: Assemblage de portes
Table refers to Chapter F: Assembly of doors
Tabelle bezieht sich auf Kapitel F: Montage von Türen

1E	1D	1C	1B	1A
2E	2D	2C	2B	2A
3E	3D	3C	3B	3A
4E	4D	4C	4B	4A

D0081688

OVERZICHT DEUREN
APERCU PORTES
OVERVIEW DOORS
UEBERSICHT TUEREN

Reynaers Aluminium

061.7198.-- or 061.7199.--	5A	5B	5C	5D	5E
061.7151--	6A	6B	6C	6D	6E
061.7198.-- or 061.7199.--	7A	7B	7C	7D	7E
061.7151--	8A	8B	8C	8D	8E
(Z) 061.7198.-- or 061.7199.--	9A	9B	9C	9D	9E
(Z) 061.7150--	10A	10B	10C	10D	10E
(Z) 061.7198.-- or 061.7199.--	11A	11B	11C	11D	11E
(Z) 061.7150--	12A	12B	12C	12D	12E

F

D0081688

CS 68-FP
EW 30

STOLPDEUR BINNENDRAAIEND
PORTE DBL. OUVR. VERS L'INTERIEUR
DBL. CAS. DOOR INW. OPENENING
STULPFL. TUER NACH INN. OEFFNEND

Reynaers Aluminium

5A	5B	5C	5D
6A	6B	6C	6D
7A	7B	7C	7D
8A	8B	8C	8D

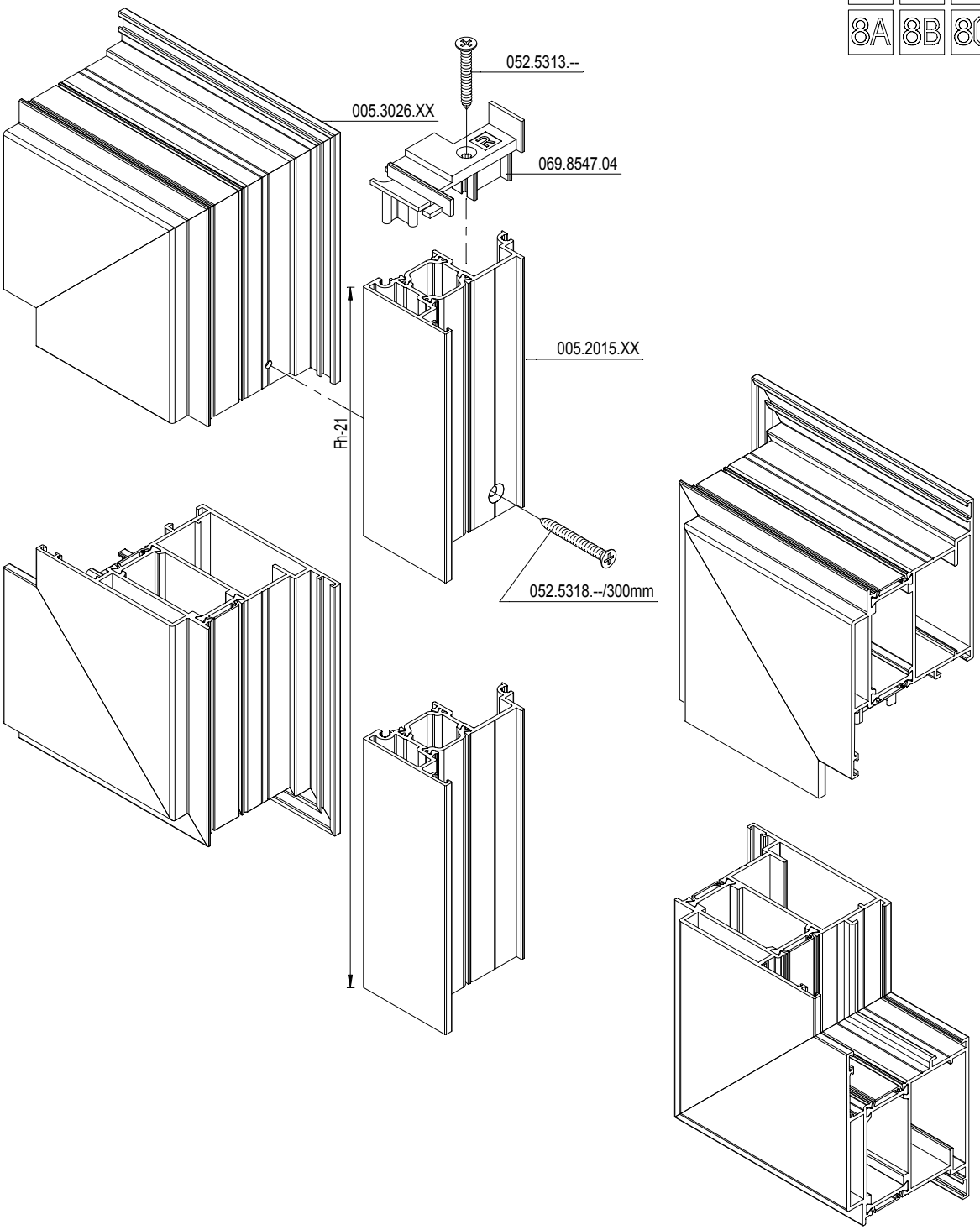

F

D0081689

STOLPDEUR BINNENDRAAIEND
PORTE DBL. OUVR. VERS L'INTERIEUR
DBL. CAS. DOOR INW. OPENENING
STULPFL. TUER NACH INN. OEFFNEND

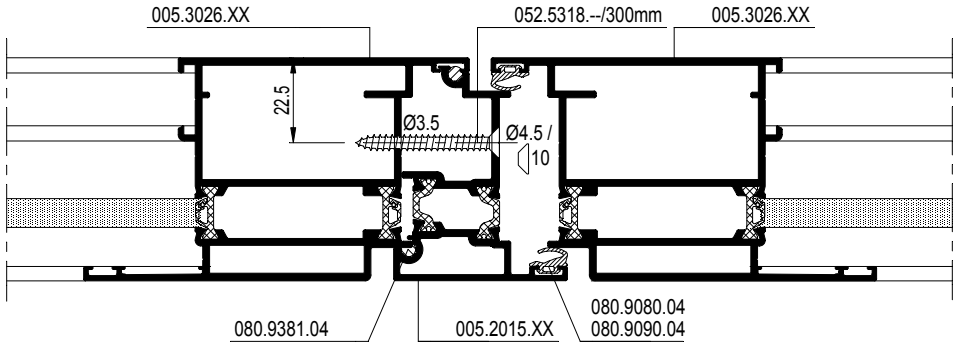

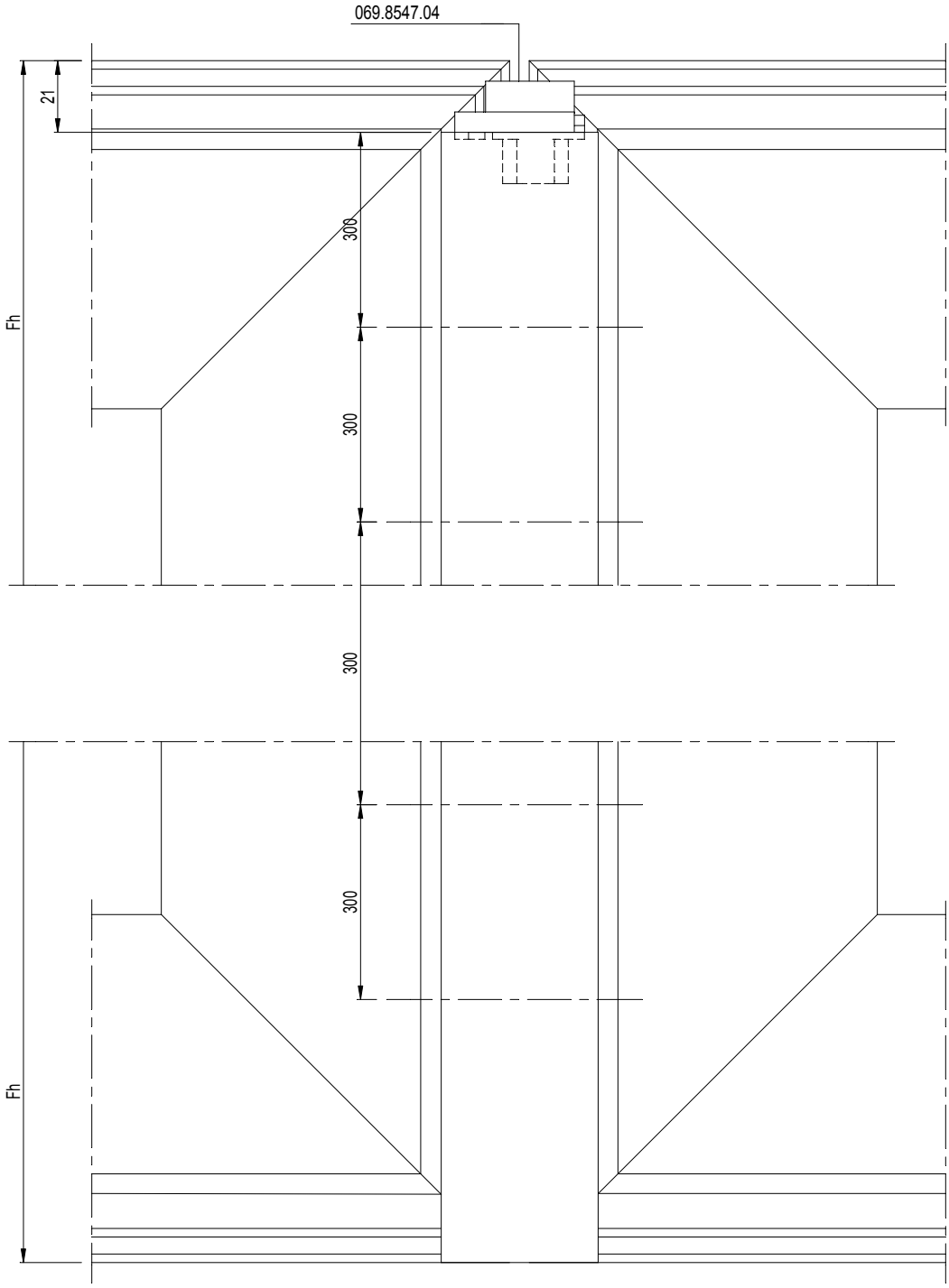

D0081689

F

CS 68-FP
EW 30

STOLPDEUR BINNENDRAAIEND
PORTE DBL. OUVR. VERS L'INTERIEUR
DBL. CAS. DOOR INW. OPENENING
STULPFL. TUER NACH INN. OEFFNEND

Reynaers Aluminium

5E 6E
7E 8E

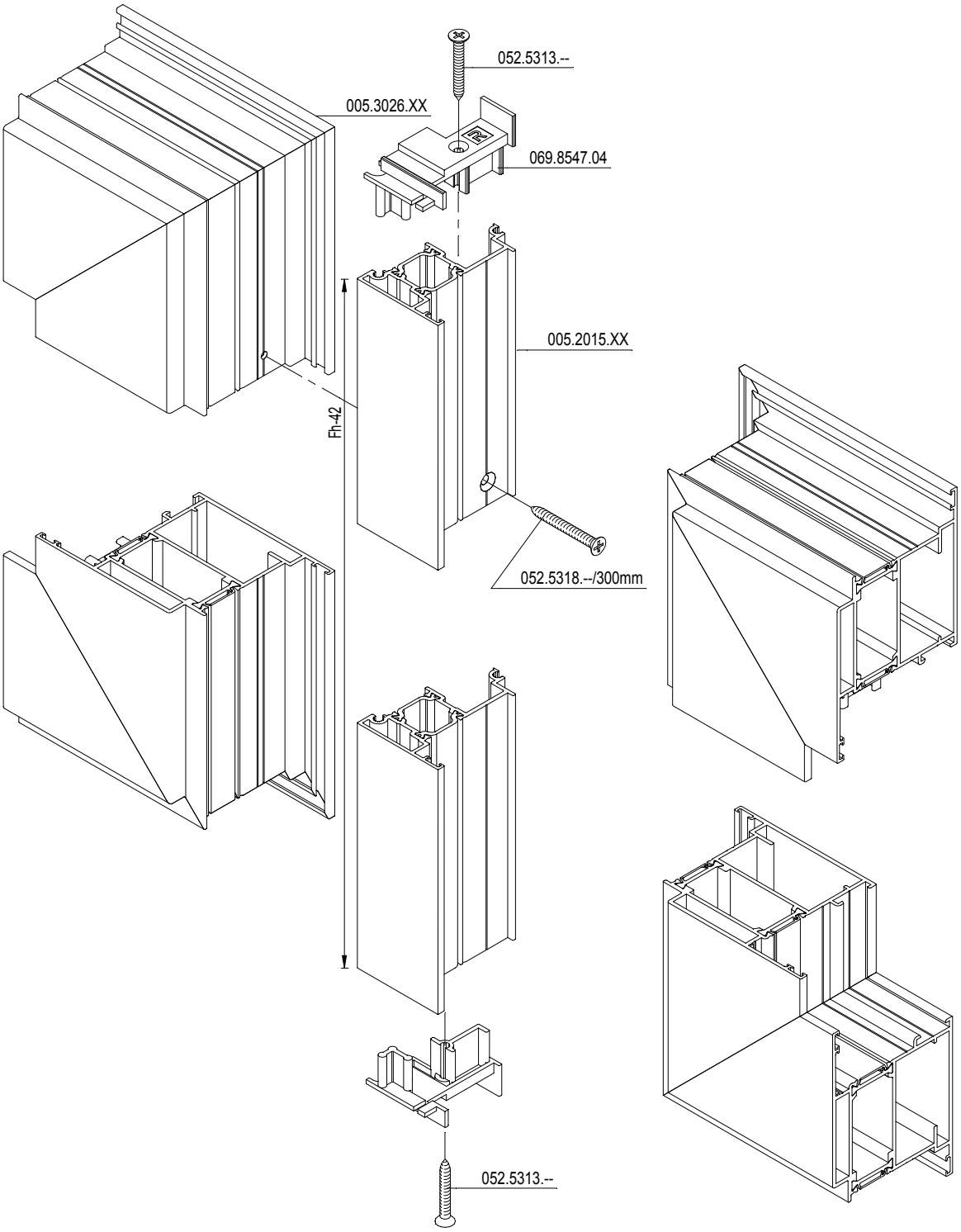

F

D0081690

STOLPDEUR BINNENDRAAIEND
PORTE DBL. OUVR. VERS L'INTERIEUR
DBL. CAS. DOOR INW. OPENENING
STULPFL. TUER NACH INN. OEFFNEND

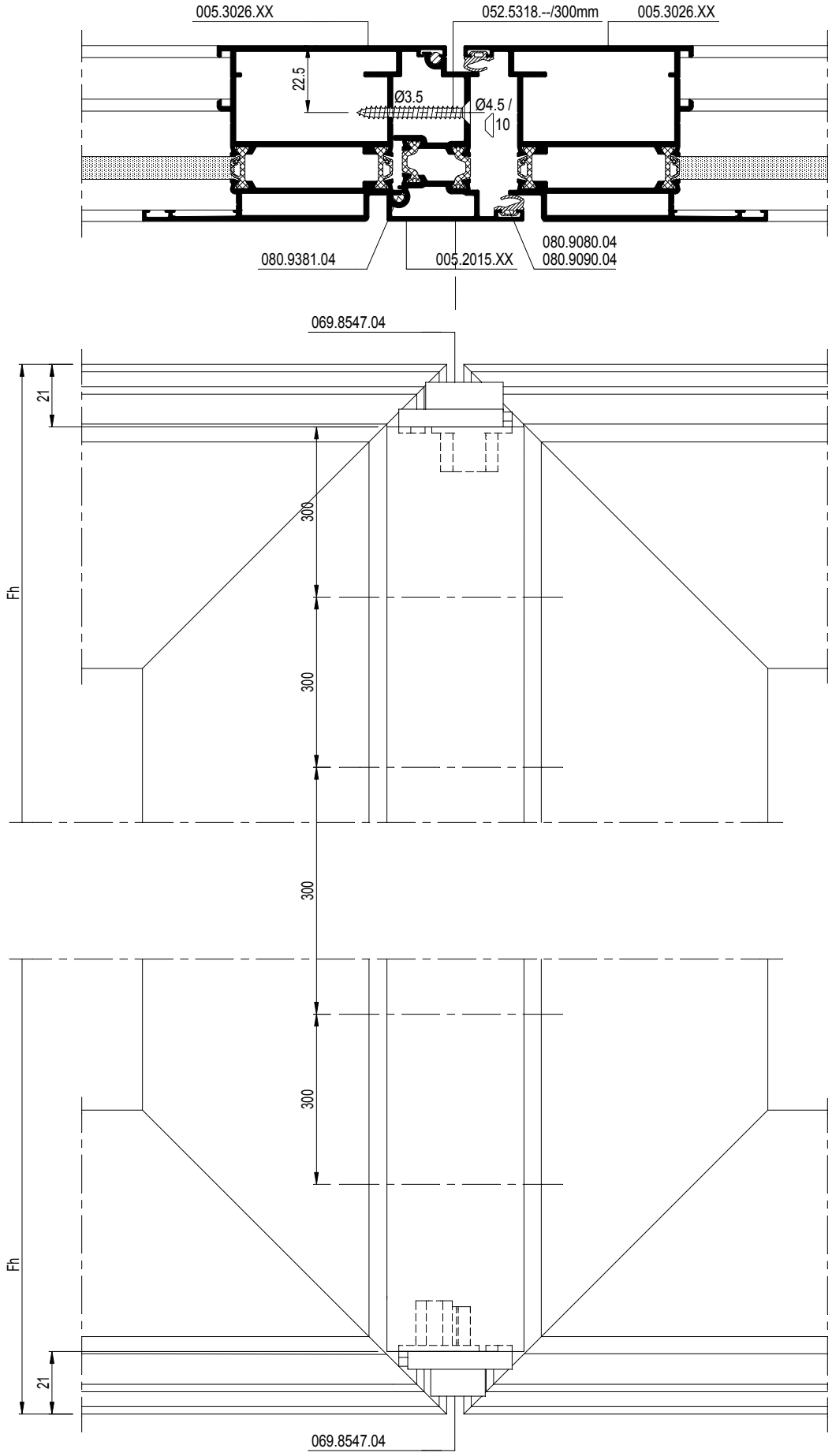

D0081690

F

EINDSTUK STOLPPROFIEL
PIECE FINALE PROFILE DOUBLE OUVRANT
END PART DOUBLE CASEMENT PROFILE
ENDKAPPE STULPPROFIL

D0081691

EINDSTUK STOLPPROFIEL
PIECE FINALE PROFILE DOUBLE OUVRANT
END PART DOUBLE CASEMENT PROFILE
ENDKAPPE STULPPROFIL

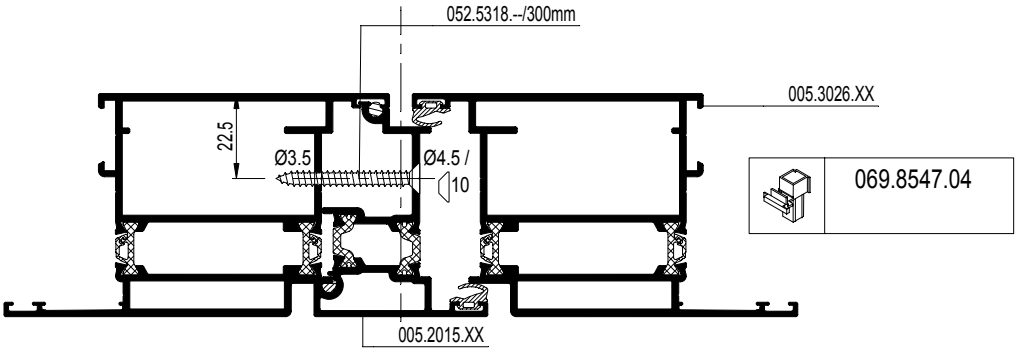

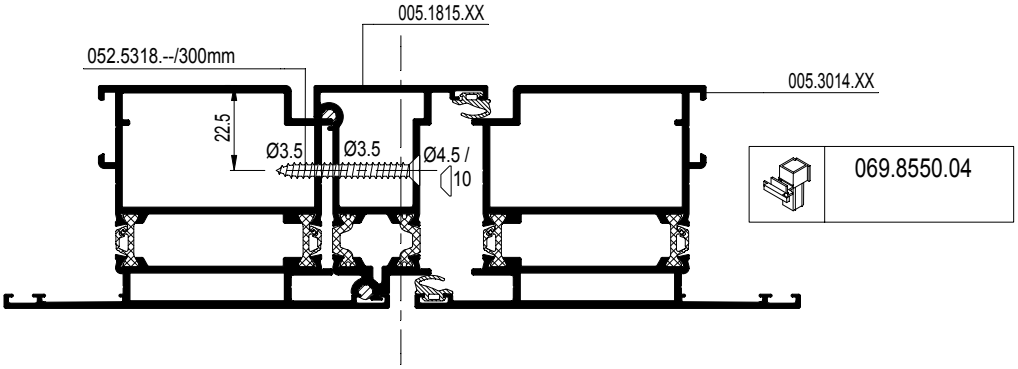

F

D0081691

Z-T DEUR - MONTAGE EINDSTUKKEN
PORTE Z-T - ASSEMBLAGE PIECES FINALES
Z-T DOOR - ASSEMBLY END PIECES
Z-T TUER - MONTAGE ENDKAPPEN

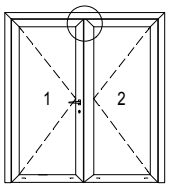

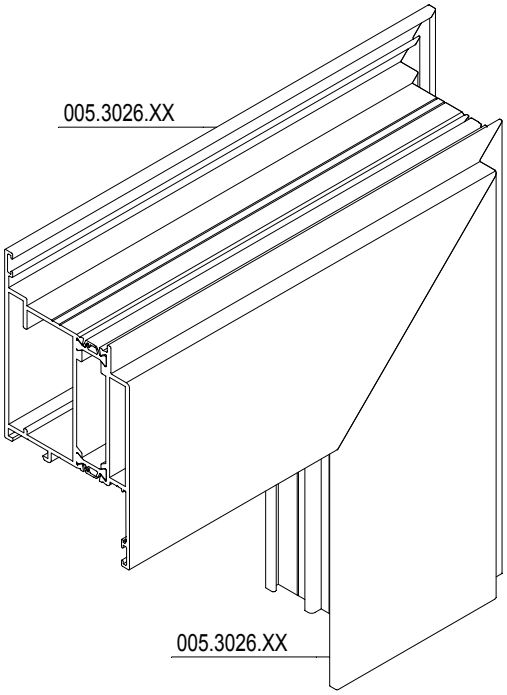

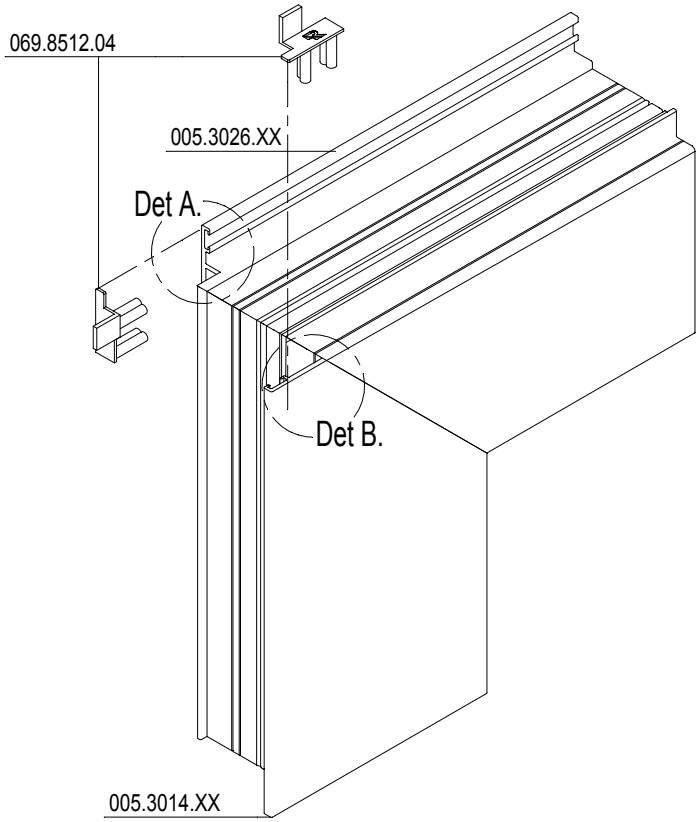

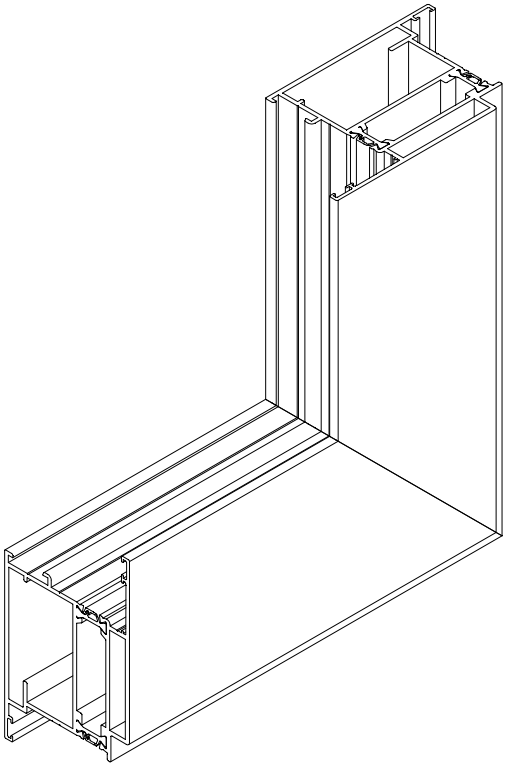

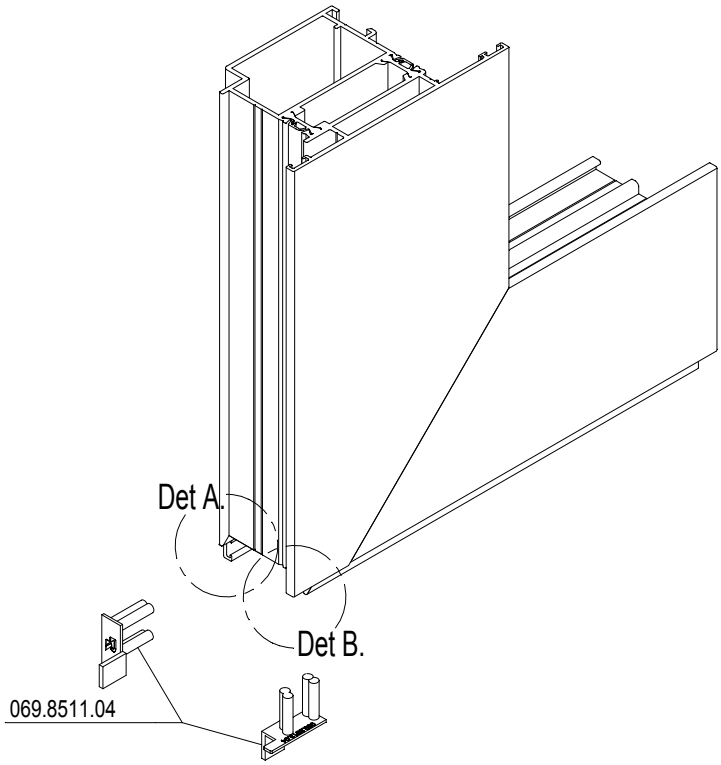

D0081692

F

Z-T DEUR - MONTAGE EINDSTUKKEN
PORTE Z-T - ASSEMBLAGE PIECES FINALES
Z-T DOOR - ASSEMBLY END PIECES
Z-T TUER - MONTAGE ENDKAPPEN

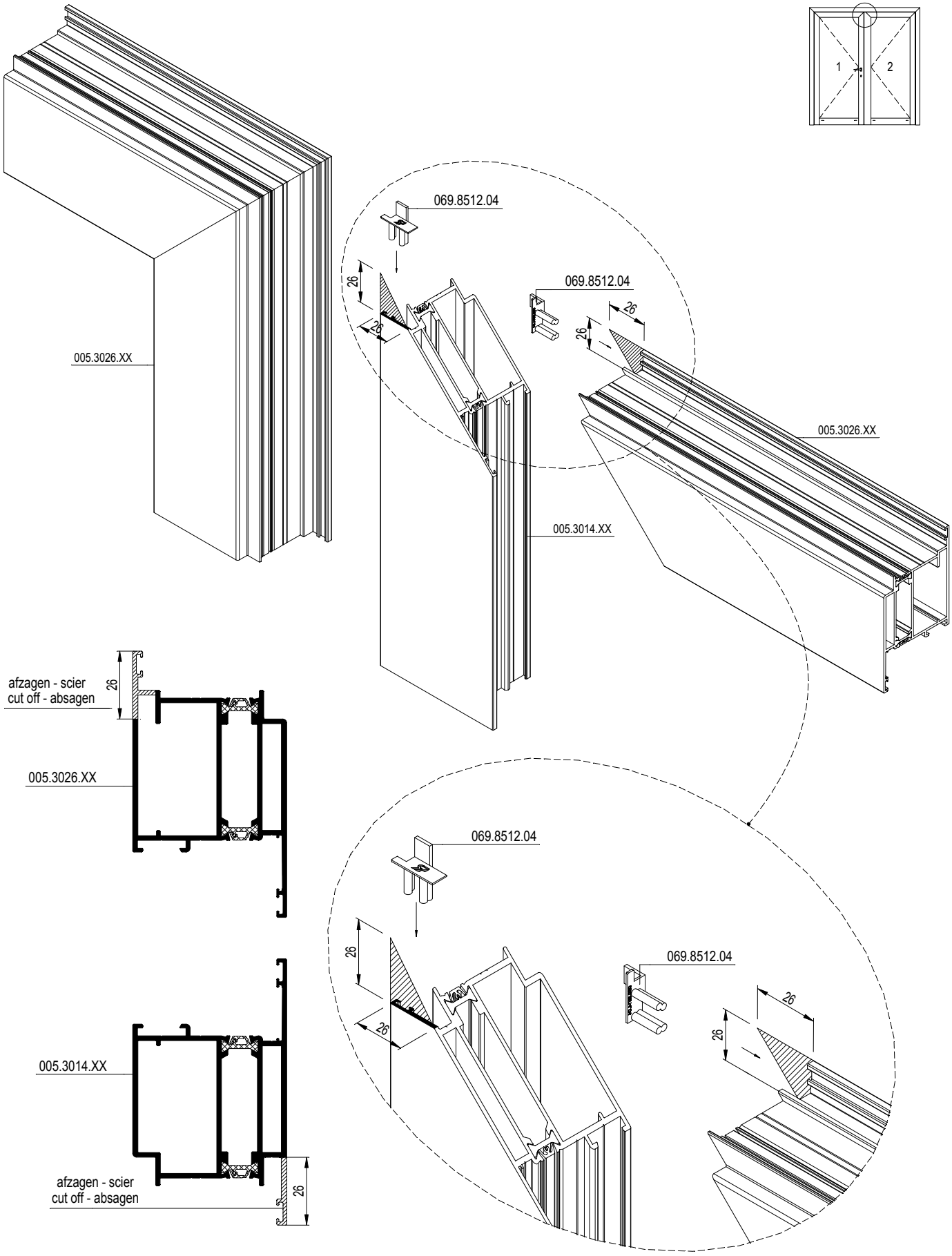

F

D0081692

SNIJDEN EN AFKITTEN DICHTINGEN
DECOUPER ET ETANCHER LES JOINTS
CUTTING AND SEALING GASKETS
SCHNEIDEN UND VERBINDEN DER DICHTUNGEN

SNIJMAL
GABARIT A COUPER
SCHNEIDESCHABLONE
CUTTING JIG
097.0376.00

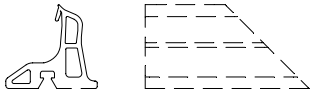

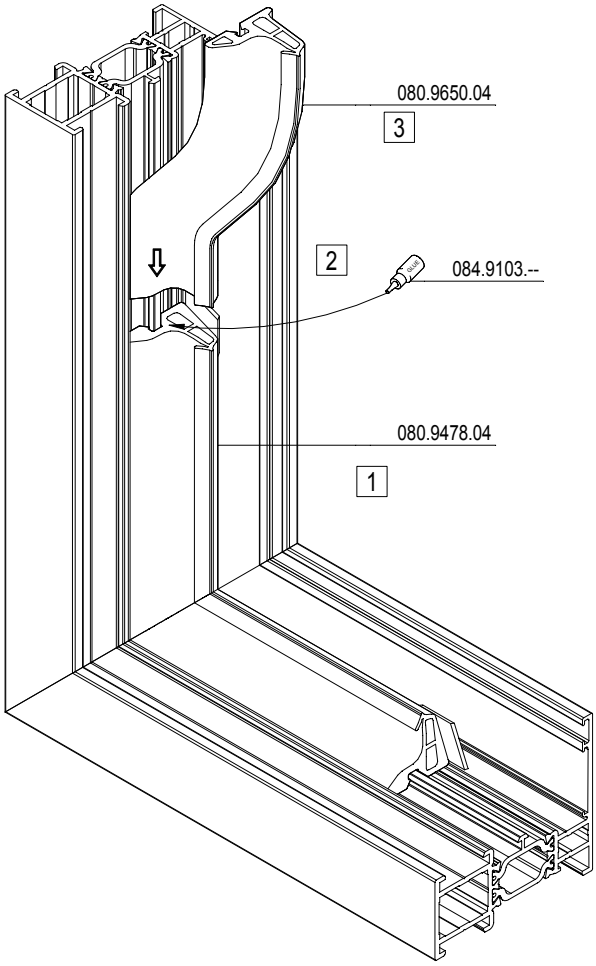

Dichting met voorgevormde hoeken

Volgorde
1. Correct versnijden met snijmal, art. nr. 097.0376.00
2. Benodigde overlengte : ± 10 mm/m
3. Middendichting aanbrengen en overlengte opstuiken
4. De verstekken verlijmen door middel van vulcaniseerlijm, art. nr. 084.9103.--

Joints aux angles préfabriqués

Ordre
1. Découpe correcte avec gabarit de coupe, art. nr. 097.0376.00
2. Longueur supplémentaire : ± 10 mm/m
3. Application du joint central et refoulage de la longueur supplémentaire
4. Encollage des onglets au moyen de colle de vulcanisation, art. nr. 084.9103.--

Gaskets with pre-formed corners

Sequence
1. Correct cutting, by means of cutting jig, art. nr. 097.0376.00
2. Necessary overhanging : ± 10 mm/m
3. Applying central gasket and compressing overhanging
4. Glueing mitres by means of glue for corner connections, art. nr. 084.9103.--

Dichtungen mit vorgefertigten Ecken

Reihenfolge
1. Zuschneiden mit Schneidlehre, art. nr. 097.0376.00
2. Dichtung je lfdm. ca. 10 mm länger zuschneiden
3. Mitteldichtung einbringen und stauchen
4. Die Dichtungsecken oder -stösse mit Vulkanisierkleber verkleben, art. nr. 084.9103.--

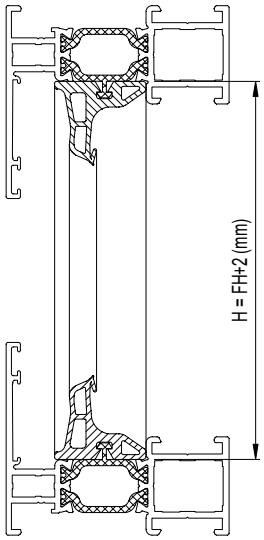

Gevulcaniseerde kader voor middendichting
Cadre vulcanisé pour joint central
Vulcanised frame for central gasket
Vulkanisierter Rahmen für Mitteldichtung

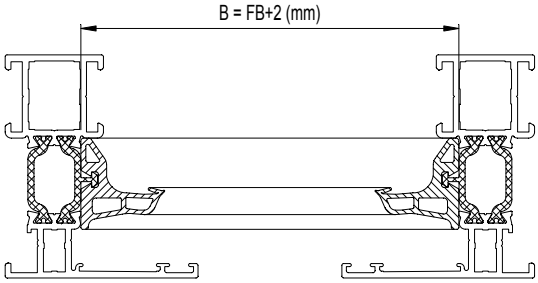

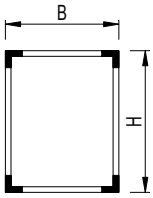

MONTAGEVOLGORDE
L 'ORDRE DE MONTAGE
THE ORDER OF ASSEMBLY
MONTAGEREIHENFOLGE
1 2 3 .

Enkel op bestelling !!
Seulement sur commande !!
Only special ordering !!
Nur auf Bestellung !!

VLEUGELHOOGTE
HAUTEUR D'OUVRANT
VENT HEIGHT
FLUEGELHOEHE
FH

VLEUGELBREEDTE
LARGEUR D'OUVRANT
VENT WIDTH
FLUEGELBREITE
FB

schaal - échelle
scale - Maßstab
1/2

D0081693

F

SNIJDEN EN AFKITTEN DICHTINGEN
DECOUPER ET ETANCHER LES JOINTS
CUTTING AND SEALING GASKETS
SCHNEIDEN UND VERBINDEN DER DICHTUNGEN

VARIANT - VARIANTE

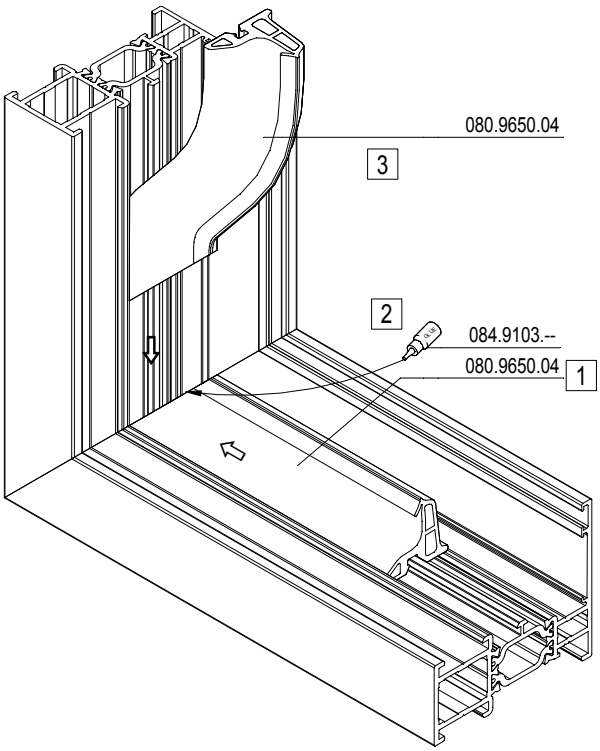

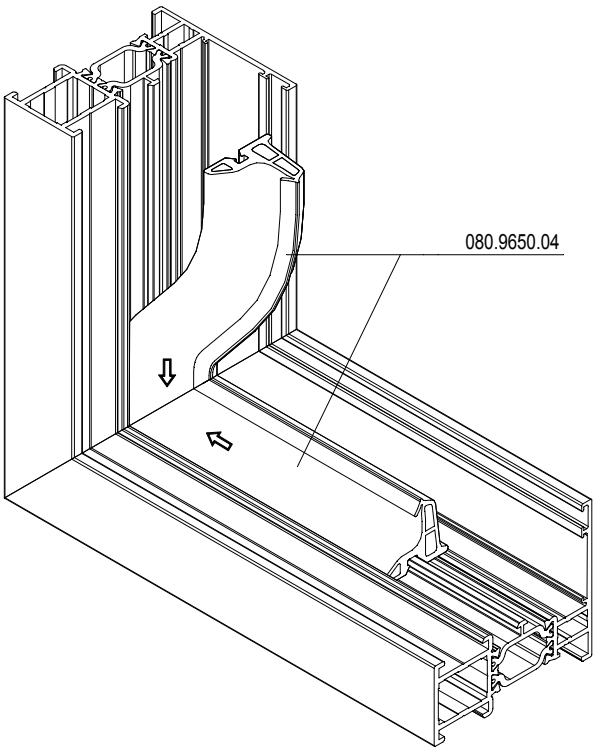

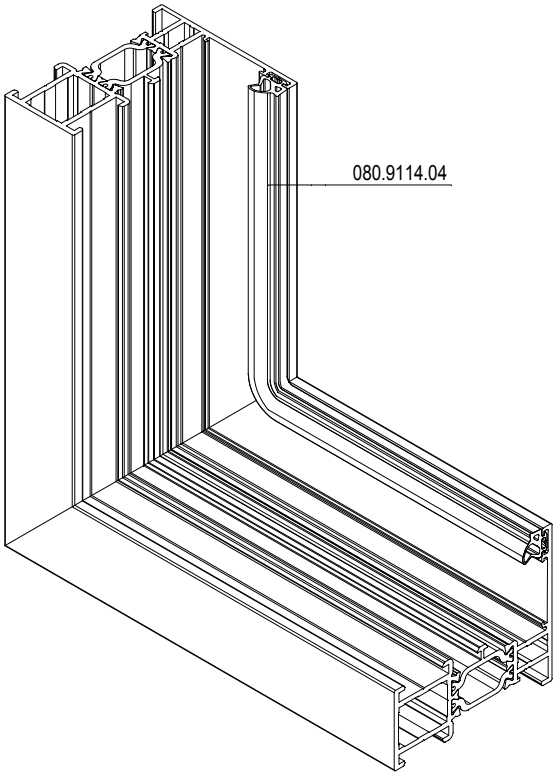

Volgorde
1. Correct versnijden met schaar, art. nr. 090.0121.00
2. Benodigde overlengte : ± 10 mm/m
3. Beglazingsdichting aanbrengen en overlengte opstuiken
4. De verstekken verlijmen door middel van vulcaniseerlijm, art. nr. 084.9103.--

Ordre
1. Découpe correcte avec ciseaux, art. nr. 090.0121.00
2. Longueur supplémentaire : ± 10 mm/m
3. Application du joint de vitrage et refoulage de la longueur supplémentaire
4. Encollage des onglets au moyen de colle de vulcanisation, art. nr. 084.9103.--

Sequence
1. Correct cutting with shears, art. nr. 090.0121.00
2. Necessary overhanging : ± 10 mm/m
3. Applying glazing gasket and compressing overhanging
4. Glueing mitres by means of glue for corner connections, art. nr. 084.9103.--

Reihenfolge
1. Zuschneiden mit Schere, art. nr. 090.0121.00
2. Dichtung je lfdm. ca. 10 mm länger zuschneiden
3. Verglasungsdichtung einbringen und stauchen
4. Die Dichtungsecken oder -stösse mit Vulkanisierkleber verkleben, art. nr. 084.9103.--

schaal - échelle
scale - Maßstab
1/2

F

D0081693

GEVULCANISEERDE KADER MIDDENDICHTING
CADRE VULCANISE JOINT CENTRAL
VULCANISED FRAME CENTRAL GASKET
VULKANISIERTE RAHM MITTELDICHTUNG

D0081694

GEVULCANISEERDE KADER MIDDENDICHTING
CADRE VULCANISE JOINT CENTRAL
VULCANISED FRAME CENTRAL GASKET
VULKANISIERTE RAHM MITTELDICHTUNG

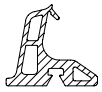

080.9650.04 → F80.9650.N4

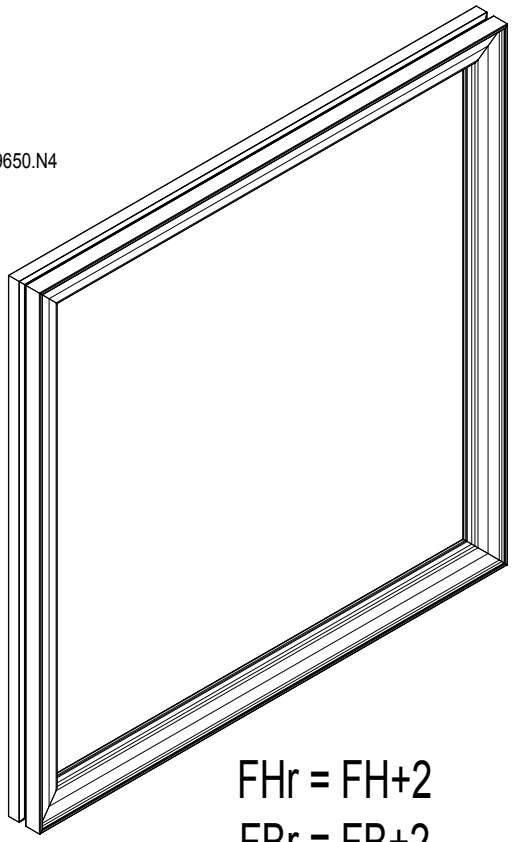

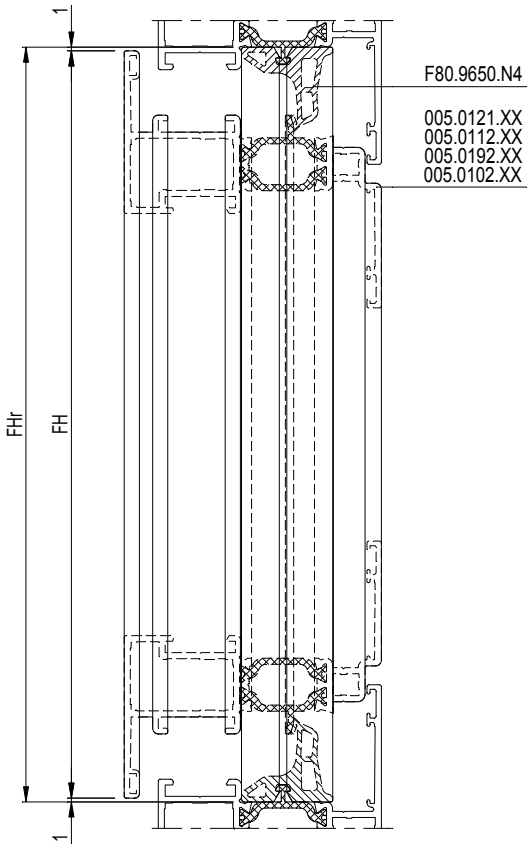

FHr = FH+2
FBr = FB+2

TE BESTELLING AFMETINGEN DIMENSIONS DE COMMANDE ORDER DIMENIONS BESTELLUNG ABMESSUNGEN		F80.9650.N4
FHr	FBr	N°
.....	.....	.....
.....	.....	.....
.....	.....	.....
.....	.....	.....

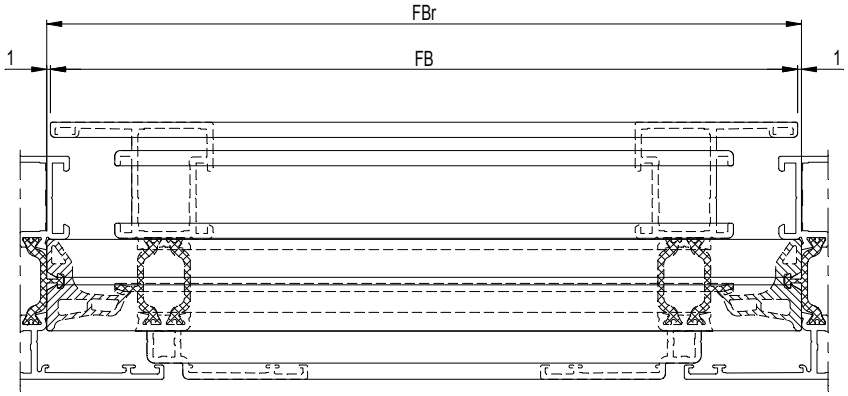

F

D0081694

BEGLAZINGSMETHODE
METHODE DE VITRAGE
GLAZING METHOD
VERGLASUNGSWEISE

Reynaers Aluminium

1

Aanbrengen van dichting

Mise en place joint

Insert gasket

Montage Dichtung

DICHTING
JOINT
GASKET
DICHTUNG

080.9114.SY
080.9116.04
080.9118.04
080.9120.04

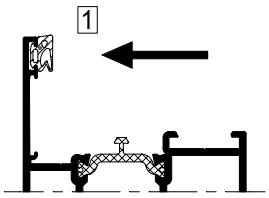

2

Aanbrengen glassteun

Mise en place support cale de vitrage

Insert glazing support

Montage Klotzbrücke

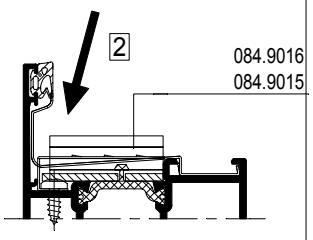

3

Glasplaatsing en opspieën

Pose de vitrage et des cales

Pos. of glass panels with spacers

Verklotzung der Scheibe

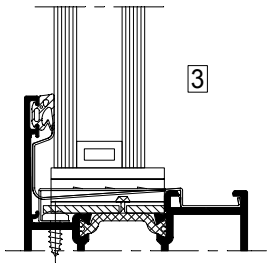

4a

Aanbrengen van glaslatten

Place les parcloses

Clip in beads

Montage Glasleisten

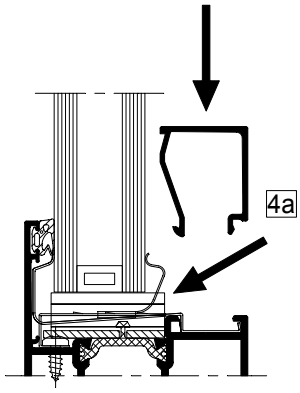

4b

Aanbrengen van afgeronde glaslatten CS 68-So/Re

Mettre en place des parcloses arrondies CS 68-So/Re

Clip in rounded glazing beads CS 68-So/Re

Montage aberundeter Glasleisten CS 68-So/Re

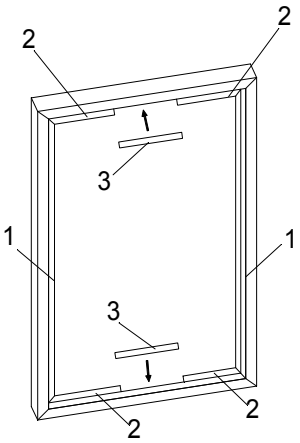

CS 68-So (12.C. ...)

CS 68-Re (12.C. ...)

5

Aanbrengen van dichting

Mise en place joint

Insert gasket

Montage Dichtung

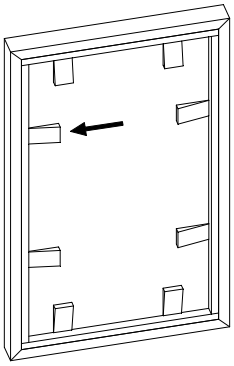

Gereedschap in hout of PVC vergemakkelijkt het plaatsen

Outillage en bois ou PVC facilite le montage

A wooden or PVC spacer can be used to insert glazing gasket

Hilfskeile aus Holz oder Kunststoff verringern die Montagezeiten

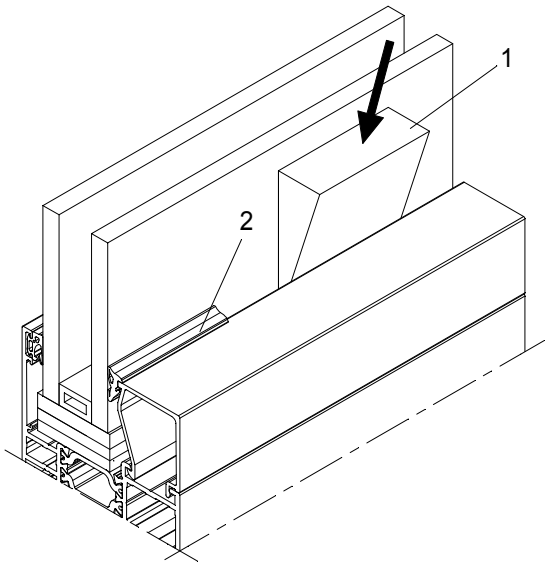

DICHTING
JOINT
GASKET
DICHTUNG

080.9123.SY
080.9124.SY
080.9125.SY
080.9126.SY
080.9128.04
080.9130.04

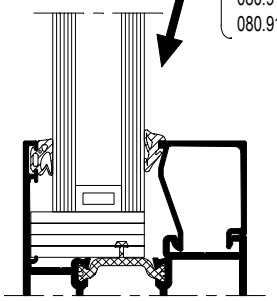

MONTAGEVOLGORDE
L'ORDRE DE MONTAGE
THE ORDER OF ASSEMBLY
MONTAGEREIHENFOLGE

1 2 3 .

D0081744

F

BEGLAZINGSMETHODE
METHODE DE VITRAGE
GLAZING METHOD
VERGLASUNGSWEISE

Glaslatten CS 68-So en CS 68-Re worden op 45° afgezaagd.
Opgelet voor het bepalen van de zaaglengte !

Parcloses CS 68-So et CS 68-Re à scier sous 45°.
Veuillez faire attention à la détermination de la longueur de scie !

Glazing beads CS 68-So and CS 68-Re are cut under 45°.
Pay attention when defining the sawing length !

Glasleisten CS 68-So und CS 68-Re werden in einem Winkel von 45° zersägt. Achtung bei der Bestimmung der Sägelänge !

Beglazing kan gebeuren met EPDM-rubbers of met een elastische kitvoeg.

Le vitrage peut être fait à l'aide de joints en EPDM ou de mastic.

Glazing can be done by means of EPDM gaskets or an elastic sealant.

Die Verglasung kann mittels EPDM-Dichtungen oder spritzbaren Dichtstoffen und Vorlegeband erfolgen.

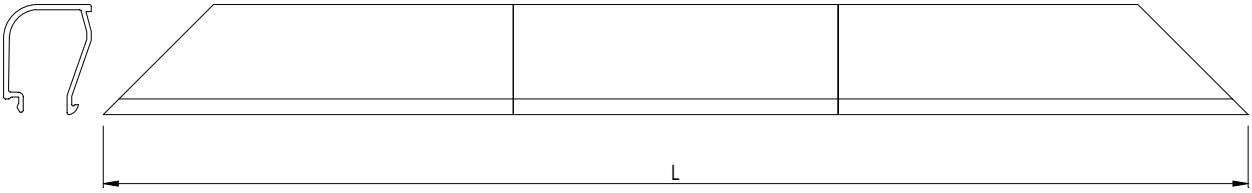

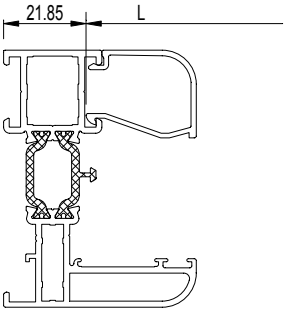

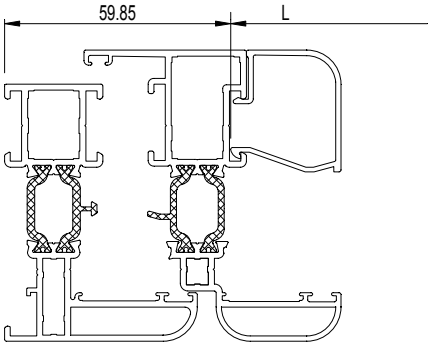

BIJKOMENDE INFO VOORBEREIDING/VERWERKING -> RAADPLEEG HOOFDSTUK B !
INFO COMPLEMENTAIRE PREPARATION/USINAGE -> CONSULTEZ CHAPITRE B !
ADDITIONAL INFO PREPARATION/PROCESSING -> CONSULT CHAPTER B !
ZUSAETZLICHE INFO VORBEREITUNG/VERARBEITUNG -> SIEHE KAPITEL B !

BEGLAZINGSTABEL
TABLEAU DE VITRAGE
GLAZING TABLE
VERGLASUNGSTABELLE

Reynaers Aluminium

Voor vaste kader en deurvleugel / Pour dormant et ouvrant porte / For outer frame and door vent / Für Blendrahmen und Haustürflügel

Glaslat / Parclose / Glazing bead / Glasleiste	Beglazingsrubber binnen / Joint de vitrage intérieur / Glazing gasket inside / Verglasungsdichtung innen	Glasdikte / Epaisseur de vitrage / Glazing thickness / Glasdicke	Beglazingsrubber buiten / Joint de vitrage extérieur / Glazing gasket outside / Verglasungsdichtung aussen
030.3615.XX	080.9125.SY	11	080.9114.SY (*)
030.3615.XX	080.9124.SY	12	080.9114.SY (*)
030.3614.XX	080.9126.SY	13	080.9114.SY (*)
030.3614.XX	080.9125.SY	14	080.9114.SY (*)
030.3614.XX	080.9124.SY	15	080.9114.SY (*)
030.3613.XX	080.9126.SY	16	080.9114.SY (*)
030.3613.XX	080.9125.SY	17	080.9114.SY (*)
030.3613.XX	080.9124.SY	18	080.9114.SY (*)
030.3612.XX	080.9126.SY	19	080.9114.SY (*)
030.3612.XX	080.9125.SY	20	080.9114.SY (*)
030.3612.XX	080.9124.SY	21	080.9114.SY (*)
030.3611.XX	080.9126.SY	22	080.9114.SY (*)
030.3611.XX	080.9125.SY	23	080.9114.SY (*)
030.3611.XX	080.9124.SY	24	080.9114.SY (*)
030.3610.XX	080.9126.SY	25	080.9114.SY (*)
030.3610.XX	080.9125.SY	26	080.9114.SY (*)
030.3610.XX	080.9124.SY	27	080.9114.SY (*)
030.3609.XX	080.9126.SY	28	080.9114.SY (*)
030.3609.XX	080.9125.SY	29	080.9114.SY (*)
030.3609.XX	080.9124.SY	30	080.9114.SY (*)
030.3608.XX	080.9126.SY	31	080.9114.SY (*)
030.3608.XX	080.9125.SY	32	080.9114.SY (*)

Raamvleugel / Ouvrant fenêtre / Window vent / Fensterflügel

Glaslat / Parclose / Glazing bead / Glasleiste	Beglazingsrubber binnen / Joint de vitrage intérieur / Glazing gasket inside / Verglasungsdichtung innen	Glasdikte / Epaisseur de vitrage / Glazing thickness / Glasdicke	Beglazingsrubber buiten / Joint de vitrage extérieur / Glazing gasket outside / Verglasungsdichtung aussen
030.3635.XX	080.9125.SY	11	080.9114.SY (*)
030.3635.XX	080.9124.SY	12	080.9114.SY (*)
030.3634.XX	080.9126.SY	13	080.9114.SY (*)
030.3634.XX	080.9125.SY	14	080.9114.SY (*)
030.3634.XX	080.9124.SY	15	080.9114.SY (*)
030.3633.XX	080.9126.SY	16	080.9114.SY (*)
030.3633.XX	080.9125.SY	17	080.9114.SY (*)
030.3633.XX	080.9124.SY	18	080.9114.SY (*)
030.3632.XX	080.9126.SY	19	080.9114.SY (*)
030.3632.XX	080.9125.SY	20	080.9114.SY (*)
030.3632.XX	080.9124.SY	21	080.9114.SY (*)
030.3631.XX	080.9126.SY	22	080.9114.SY (*)
030.3631.XX	080.9125.SY	23	080.9114.SY (*)
030.3631.XX	080.9124.SY	24	080.9114.SY (*)
030.3630.XX	080.9126.SY	25	080.9114.SY (*)
030.3630.XX	080.9125.SY	26	080.9114.SY (*)
030.3630.XX	080.9124.SY	27	080.9114.SY (*)
030.3629.XX	080.9126.SY	28	080.9114.SY (*)
030.3629.XX	080.9125.SY	29	080.9114.SY (*)
030.3629.XX	080.9124.SY	30	080.9114.SY (*)
030.3628.XX	080.9126.SY	31	080.9114.SY (*)
030.3628.XX	080.9125.SY	32	080.9114.SY (*)

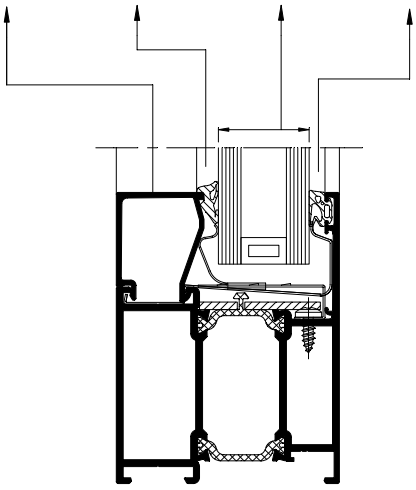

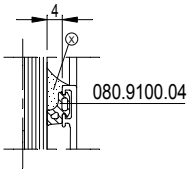

(*) Variant
Variante

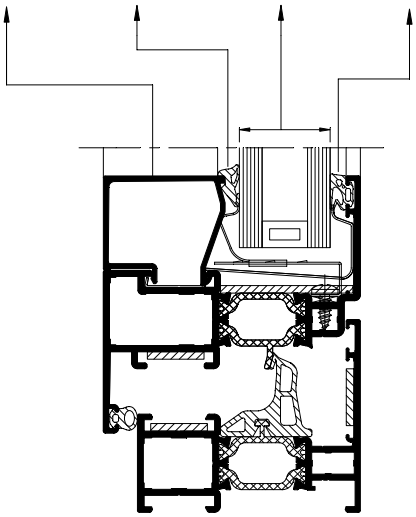

F

D0081747

Glaslatten buitenbeglazing

Beglazingsrubber buiten Joint de vitrage extérieur Glazing gasket outside Verglasungsdichtung aussen	Glasdikte Epaisseur de vitrage Glazing thickness Glasdicke	Beglazingsrubber binnen Joint de vitrage intérieur Glazing gasket inside Verglasungsdichtung innen	Glaslat Parclose Glazing bead Glasleiste
080.9114.SY (*)	11	080.9125.SY	030.3615.XX
080.9114.SY (*)	12	080.9124.SY	030.3615.XX
080.9114.SY (*)	13	080.9126.SY	030.3614.XX
080.9114.SY (*)	14	080.9125.SY	030.3614.XX
080.9114.SY (*)	15	080.9124.SY	030.3614.XX
080.9114.SY (*)	16	080.9126.SY	030.3613.XX
080.9114.SY (*)	17	080.9125.SY	030.3613.XX
080.9114.SY (*)	18	080.9124.SY	030.3613.XX
080.9114.SY (*)	19	080.9126.SY	030.3612.XX
080.9114.SY (*)	20	080.9125.SY	030.3612.XX
080.9114.SY (*)	21	080.9124.SY	030.3612.XX
080.9114.SY (*)	22	080.9126.SY	030.3611.XX
080.9114.SY (*)	23	080.9125.SY	030.3611.XX
080.9114.SY (*)	24	080.9124.SY	030.3611.XX
080.9114.SY (*)	25	080.9126.SY	030.3610.XX
080.9114.SY (*)	26	080.9125.SY	030.3610.XX
080.9114.SY (*)	27	080.9124.SY	030.3610.XX
080.9114.SY (*)	28	080.9126.SY	030.3609.XX
080.9114.SY (*)	29	080.9125.SY	030.3609.XX
080.9114.SY (*)	30	080.9124.SY	030.3609.XX
080.9114.SY (*)	31	080.9126.SY	030.3608.XX
080.9114.SY (*)	32	080.9125.SY	030.3608.XX

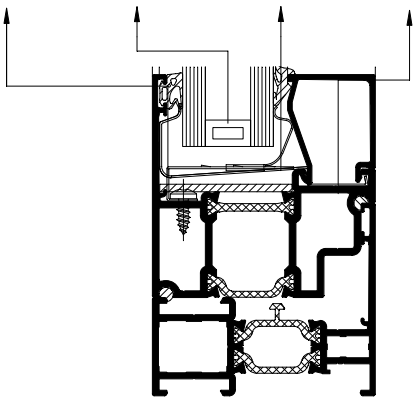

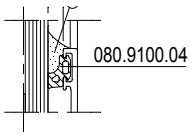

(*) Variant
Variante

BEGLAZINGSTABEL CS 68-So
TABLEAU DE VITRAGE CS 68-So
GLAZING TABLE CS 68-So
VERGLASUNGSTABELLE CS 68-So

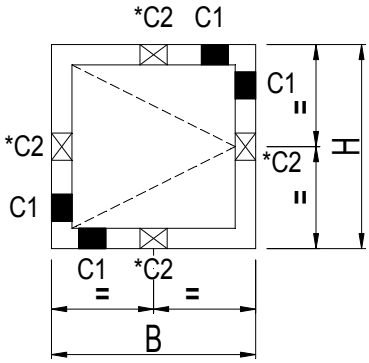

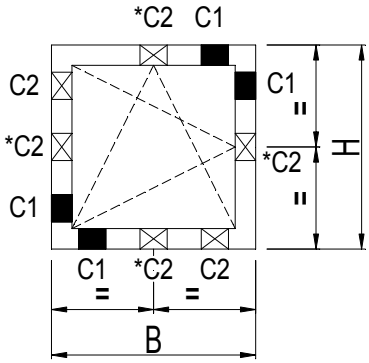

C1 : steunblokje - cales de support - support blocks - Tragklötze
C2 : stelblokje - cales d'ajustement - adjusting blocks - Distanzklötze

*Enkel bij draairaam en draaikipraam HV.
B en H > 800 mm = extra stelblokje
*Seulement pour fenêtre ouvrante a la française et fenêtre oscillo-battante HV.
B et H > 800 mm = cale de support supplémentaire
*Only for side-hung window and turn and tilt window HV.
B and H > 800 mm = adjusting block extra
*Nur bei Drehfenster und Drehkippfenster HV.
B und H > 800 mm = Extra Distanzklötz

F

D0081748

BEGLAZINGSTABEL CS 68-So
TABLEAU DE VITRAGE CS 68-So
GLAZING TABLE CS 68-So
VERGLASUNGSTABELLE CS 68-So

Reynaers Aluminium

Voor vaste kader en deurvleugel
Pour dormant et ouvrant porte
For outer frame and door vent
Für Blendrahmen und Haustürflügel

Glaslat Parclose Glazing bead Glasleiste	Beglazingsrubber binnen Joint de vitrage intérieur Glazing gasket inside Verglasungsdichtung innen	Glasdikte Epaisseur de vitrage Glazing thickness Glasdicke	Beglazingsrubber buiten Joint de vitrage extérieur Glazing gasket outside Verglasungsdichtung aussen
005.0276.XX	080.9130.04	18	080.9114.SY (*)
005.0276.XX	080.9128.04	19	080.9114.SY (*)
005.0276.XX	080.9128.04	20	080.9114.SY (*)
005.0276.XX	080.9126.SY	21	080.9114.SY (*)
005.0276.XX	080.9126.SY	22	080.9114.SY (*)
005.0276.XX	080.9125.SY	23	080.9114.SY (*)
005.0276.XX	080.9124.SY	24	080.9114.SY (*)
001.0260.XX	080.9128.04	25	080.9116.04
001.0260.XX	080.9128.04	26	080.9116.04
001.0260.XX	080.9130.04	27	080.9114.SY (*)
001.0260.XX	080.9128.04	28	080.9114.SY (*)
001.0260.XX	080.9128.04	29	080.9114.SY (*)
001.0260.XX	080.9126.SY	30	080.9114.SY (*)
001.0260.XX	080.9126.SY	31	080.9114.SY (*)
001.0260.XX	080.9125.SY	32	080.9114.SY (*)

Raamvleugel
Ouvrant fenêtre
Window vent
Fensterflügel

Glaslat Parclose Glazing bead Glasleiste	Beglazingsrubber binnen Joint de vitrage intérieur Glazing gasket inside Verglasungsdichtung innen	Glasdikte Epaisseur de vitrage Glazing thickness Glasdicke	Beglazingsrubber buiten Joint de vitrage extérieur Glazing gasket outside Verglasungsdichtung aussen
005.0277.XX	080.9130.04	18	080.9114.SY (*)
005.0277.XX	080.9128.04	19	080.9114.SY (*)
005.0277.XX	080.9128.04	20	080.9114.SY (*)
005.0277.XX	080.9126.SY	21	080.9114.SY (*)
005.0277.XX	080.9126.SY	22	080.9114.SY (*)
005.0277.XX	080.9125.SY	23	080.9114.SY (*)
005.0277.XX	080.9124.SY	24	080.9114.SY (*)
001.0248.XX	080.9128.04	25	080.9116.04
001.0248.XX	080.9128.04	26	080.9116.04
001.0248.XX	080.9130.04	27	080.9114.SY (*)
001.0248.XX	080.9128.04	28	080.9114.SY (*)
001.0248.XX	080.9128.04	29	080.9114.SY (*)
001.0248.XX	080.9126.SY	30	080.9114.SY (*)
001.0248.XX	080.9126.SY	31	080.9114.SY (*)
001.0248.XX	080.9125.SY	32	080.9114.SY (*)

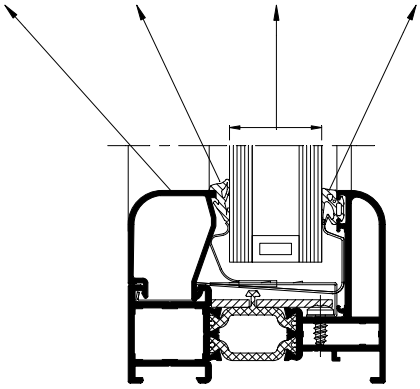

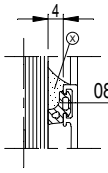

(*) Variant
Variante

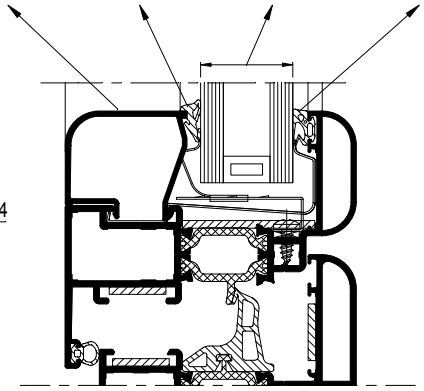

F

D0081748

BEGLAZINGSTABEL CS 68-Re
TABLEAU DE VITRAGE CS 68-Re
GLAZING TABLE CS 68-Re
VERGLASUNGSTABELLE CS 68-Re

D0081750

BEGLAZINGSTABEL CS 68-Re
TABLEAU DE VITRAGE CS 68-Re
GLAZING TABLE CS 68-Re
VERGLASUNGSTABELLE CS 68-Re

Reynaers Aluminium

Voor vaste kader en deurvleugel
Pour dormant et ouvrant porte
For outer frame and door vent
Für Blendrahmen und Haustürflügel

Glaslat Parclose Glazing bead Glasleiste	Beglazingsrubber binnen Joint de vitrage intérieur Glazing gasket inside Verglasungsdichtung innen	Glasdikte Epaisseur de vitrage Glazing thickness Glasdicke	Beglazingsrubber buiten Joint de vitrage extérieur Glazing gasket outside Verglasungsdichtung aussen
008.0226.XX	080.9128.04	11	080.9114.SY (*)
008.0226.XX	080.9126.SY	12	080.9114.SY (*)
008.0226.XX	080.9126.SY	13	080.9114.SY (*)
008.0226.XX	080.9125.SY	14	080.9114.SY (*)
008.0226.XX	080.9124.SY	15	080.9114.SY (*)
005.0226XX	080.9130.04	16	080.9116.04
005.0226.XX	080.9128.04	17	080.9116.04
005.0226.XX	080.9130.04	18	080.9114.SY (*)
005.0226.XX	080.9128.04	19	080.9114.SY (*)
005.0226.XX	080.9128.04	20	080.9114.SY (*)
005.0226.XX	080.9126.SY	21	080.9114.SY (*)
005.0226.XX	080.9126.SY	22	080.9114.SY (*)
005.0226.XX	080.9125.SY	23	080.9114.SY (*)
005.0226.XX	080.9124.SY	24	080.9114.SY (*)
001.0200.XX	080.9130.04	25	080.9116.04
001.0200.XX	080.9128.04	26	080.9116.04
001.0200.XX	080.9130.04	27	080.9114.SY (*)
001.0200.XX	080.9128.04	28	080.9114.SY (*)
001.0200.XX	080.9128.04	29	080.9114.SY (*)
001.0200.XX	080.9126.SY	30	080.9114.SY (*)
001.0200.XX	080.9126.SY	31	080.9114.SY (*)
001.0200.XX	080.9125.SY	32	080.9114.SY (*)

Raamvleugel
Ouvrant fenêtre
Window vent
Fensterflügel

Glaslat Parclose Glazing bead Glasleiste	Beglazingsrubber binnen Joint de vitrage intérieur Glazing gasket inside Verglasungsdichtung innen	Glasdikte Epaisseur de vitrage Glazing thickness Glasdicke	Beglazingsrubber buiten Joint de vitrage extérieur Glazing gasket outside Verglasungsdichtung aussen
008.0227.XX	080.9128.04	11	080.9114.SY (*)
008.0227.XX	080.9126.SY	12	080.9114.SY (*)
008.0227.XX	080.9126.SY	13	080.9114.SY (*)
008.0227.XX	080.9125.SY	14	080.9114.SY (*)
008.0227.XX	080.9124.SY	15	080.9114.SY (*)
005.0227.XX	080.9130.04	16	080.9116.04
005.0227.XX	080.9128.04	17	080.9116.04
005.0227.XX	080.9130.04	18	080.9114.SY (*)
005.0227.XX	080.9128.04	19	080.9114.SY (*)
005.0227.XX	080.9128.04	20	080.9114.SY (*)
005.0227.XX	080.9126.SY	21	080.9114.SY (*)
005.0227.XX	080.9126.SY	22	080.9114.SY (*)
005.0227.XX	080.9125.SY	23	080.9114.SY (*)
005.0227.XX	080.9124.SY	24	080.9114.SY (*)
001.0201.XX	080.9130.04	25	080.9116.04
001.0201.XX	080.9128.04	26	080.9116.04
001.0201.XX	080.9130.04	27	080.9114.SY (*)
001.0201.XX	080.9128.04	28	080.9114.SY (*)
001.0201.XX	080.9128.04	29	080.9114.SY (*)
001.0201.XX	080.9126.SY	30	080.9114.SY (*)
001.0201.XX	080.9126.SY	31	080.9114.SY (*)
001.0201.XX	080.9125.SY	32	080.9114.SY (*)

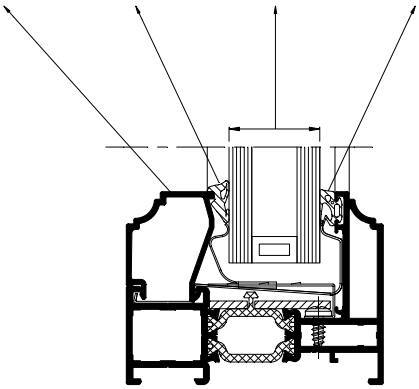

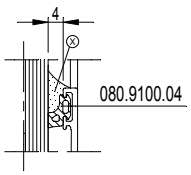

(*) Variant
Variante

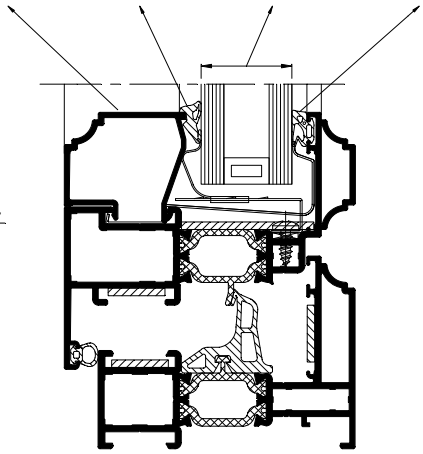

F

D0081750

BEGLAZINGSTABEL
TABLEAU DE VITRAGE
GLAZING TABLE
VERGLASUNGSTABELLE

Reynaers Aluminium

Deurvleugel
Ouvrant porte
Door vent
Haustürflügel

Glaslat Parclose Glazing bead Glasleiste	Beglazingsrubber binnen Joint de vitrage intérieur Glazing gasket inside Verglasungsdichtung innen	Glasdikte Epaisseur de vitrage Glazing thickness Glasdicke	Beglazingsrubber buiten Joint de vitrage extérieur Glazing gasket outside Verglasungsdichtung außen
030.3617.XX	080.9124.SY	15	080.9114.SY (*)
030.3616.XX	080.9126.SY	16	080.9114.SY (*)
030.3616.XX	080.9125.SY	17	080.9114.SY (*)
030.3616.XX	080.9124.SY	18	080.9114.SY (*)
030.3615.XX	080.9126.SY	19	080.9114.SY (*)
030.3615.XX	080.9125.SY	20	080.9114.SY (*)
030.3615.XX	080.9124.SY	21	080.9114.SY (*)
030.3614.XX	080.9126.SY	22	080.9114.SY (*)
030.3614.XX	080.9125.SY	23	080.9114.SY (*)
030.3614.XX	080.9124.SY	24	080.9114.SY (*)
030.3613.XX	080.9126.SY	25	080.9114.SY (*)
030.3613.XX	080.9125.SY	26	080.9114.SY (*)
030.3613.XX	080.9124.SY	27	080.9114.SY (*)
030.3612.XX	080.9126.SY	28	080.9114.SY (*)
030.3612.XX	080.9125.SY	29	080.9114.SY (*)
030.3612.XX	080.9124.SY	30	080.9114.SY (*)
030.3611.XX	080.9126.SY	31	080.9114.SY (*)
030.3611.XX	080.9125.SY	32	080.9114.SY (*)
030.3611.XX	080.9124.SY	33	080.9114.SY (*)
030.3610.XX	080.9126.SY	34	080.9114.SY (*)
030.3610.XX	080.9125.SY	35	080.9114.SY (*)
030.3610.XX	080.9124.SY	36	080.9114.SY (*)
030.3609.XX	080.9126.SY	37	080.9114.SY (*)
030.3609.XX	080.9125.SY	38	080.9114.SY (*)
030.3609.XX	080.9124.SY	39	080.9114.SY (*)
030.3608.XX	080.9126.SY	40	080.9114.SY (*)
030.3608.XX	080.9125.SY	41	080.9114.SY (*)
030.3608.XX	080.9124.SY	42	080.9114.SY (*)

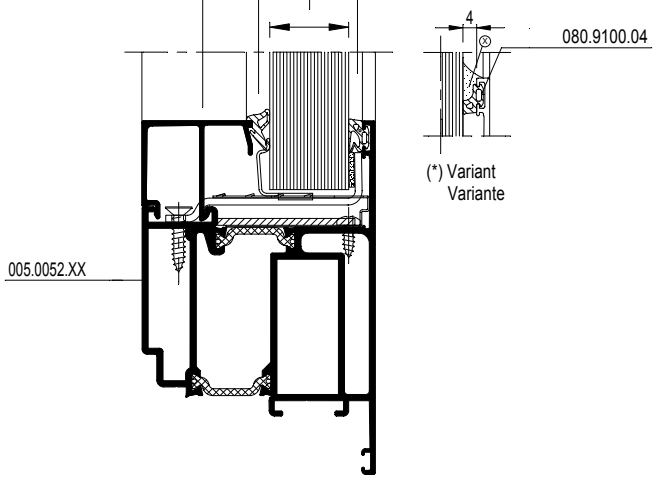

F

D0081755

BEGLAZINGSTABEL CS 68-Re
TABLEAU DE VITRAGE CS 68-Re
GLAZING TABLE CS 68-Re
VERGLASUNGSTABELLE CS 68-Re

Reynaers Aluminium

Glaslat Parclose Glazing bead Glasleiste	Beglazingsrubber binnen Joint de vitrage intérieur Glazing gasket inside Verglasungsdichtung innen	Glasdikte Epaisseur de vitrage Glazing thickness Glasdicke	Beglazingsrubber buiten Joint de vitrage extérieur Glazing gasket outside Verglasungsdichtung aussen
008.0226.XX	080.9130.04	18	080.9114.SY
008.0226.XX	080.9128.04	19	080.9114.SY
008.0226.XX	080.9128.04	20	080.9114.SY
008.0226.XX	080.9126.SY	21	080.9114.SY
008.0226.XX	080.9126.SY	22	080.9114.SY
008.0226.XX	080.9125.SY	23	080.9114.SY
008.0226.XX	080.9124.SY	24	080.9114.SY
005.0226.XX	080.9130.04	25	080.9116.04
005.0226.XX	080.9128.04	26	080.9116.04
005.0226.XX	080.9130.04	27	080.9114.SY
005.0226.XX	080.9128.04	28	080.9114.SY
005.0226.XX	080.9128.04	29	080.9114.SY
005.0226.XX	080.9126.SY	30	080.9114.SY
005.0226.XX	080.9126.SY	31	080.9114.SY
005.0226.XX	080.9125.SY	32	080.9114.SY
005.0226.XX	080.9124.SY	33	080.9114.SY

Deurvleugel
Ouvrant porte
Door vent
Haustürflügel

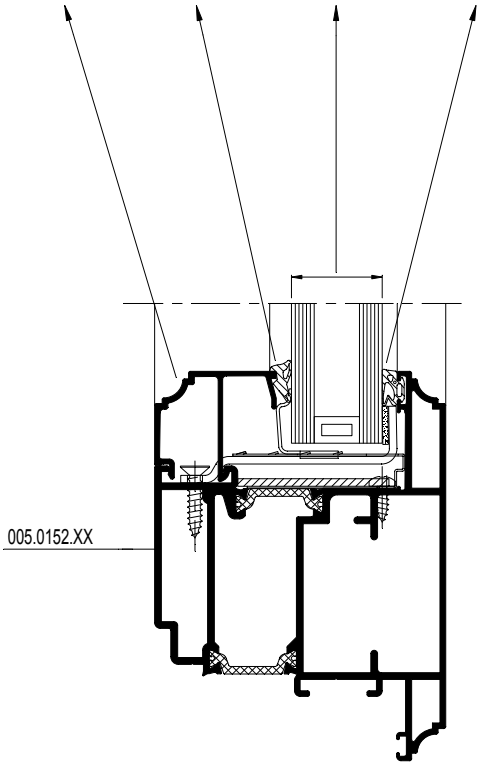

F

D0081755

BEGLAZINGSTABEL INBRAAKWEREND
TABLEAU DE VITRAGE PROTECTION ANTI-VOL
GLAZING TABLE BURGLAR PROTECTION
VERGLASUNGSTABELLE EINBRUCHHEMMEND

Reynaers Aluminium

Voor vaste kader en deurvleugel
Pour dormant et ouvrant porte
For outer frame and door vent
Für Blendrahmen und Haustürflügel

Glaslat / Parclose / Glazing bead / Glasleiste	Beglazingsrubber binnen / Joint de vitrage intérieur / Glazing gasket inside / Verglasungsdichtung innen	Glasdikte / Epaisseur de vitrage / Glazing thickness / Glasdicke	Beglazingsrubber buiten / Joint de vitrage extérieur / Glazing gasket outside / Verglasungsdichtung aussen
030.3650.XX	080.9128.04	16	080.9120.04
030.3650.XX	080.9128.04	17	080.9120.04
030.3650.XX	080.9128.04	18	080.9118.04
030.3650.XX	080.9128.04	19	080.9118.04
030.3650.XX	080.9128.04	20	080.9116.04
030.3650.XX	080.9128.04	21	080.9116.04
030.3650.XX	080.9128.04	22	080.9114.SY
030.3650.XX	080.9128.04	23	080.9114.SY
030.3650.XX	080.9126.SY	24	080.9114.SY
030.3649.XX	080.9128.04	25	080.9114.SY
030.3649.XX	080.9128.04	26	080.9114.SY
030.3649.XX	080.9126.SY	27	080.9114.SY
030.3648.XX	080.9128.04	28	080.9114.SY
030.3648.XX	080.9128.04	29	080.9114.SY
030.3648.XX	080.9126.SY	30	080.9114.SY
030.3647.XX	080.9128.04	31	080.9114.SY
030.3647.XX	080.9128.04	32	080.9114.SY

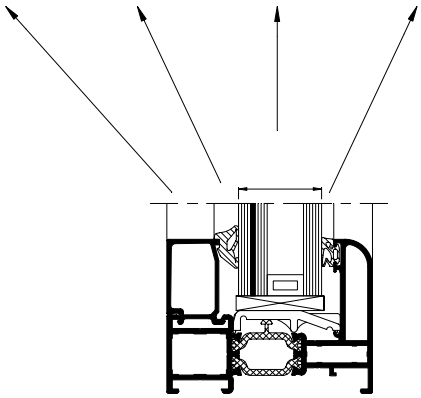

Raamvleugel
Ouvrant fenêtre
Window vent
Fensterflügel

Glaslat / Parclose / Glazing bead / Glasleiste	Beglazingsrubber binnen / Joint de vitrage intérieur / Glazing gasket inside / Verglasungsdichtung innen	Glasdikte / Epaisseur de vitrage / Glazing thickness / Glasdicke	Beglazingsrubber buiten / Joint de vitrage extérieur / Glazing gasket outside / Verglasungsdichtung aussen
030.3670.XX	080.9128.04	16	080.9120.04
030.3670.XX	080.9128.04	17	080.9120.04
030.3670.XX	080.9128.04	18	080.9118.04
030.3670.XX	080.9128.04	19	080.9118.04
030.3670.XX	080.9128.04	20	080.9116.04
030.3670.XX	080.9128.04	21	080.9116.04
030.3670.XX	080.9128.04	22	080.9114.04
030.3670.XX	080.9128.04	23	080.9114.04
030.3670.XX	080.9126.SY	24	080.9114.04
030.3669.XX	080.9128.04	25	080.9114.04
030.3669.XX	080.9128.04	26	080.9114.04
030.3669.XX	080.9126.SY	27	080.9114.04
030.3668.XX	080.9128.04	28	080.9114.04
030.3668.XX	080.9128.04	29	080.9114.04
030.3668.XX	080.9126.SY	30	080.9114.04
030.3667.XX	080.9128.04	31	080.9114.04
030.3667.XX	080.9128.04	32	080.9114.04

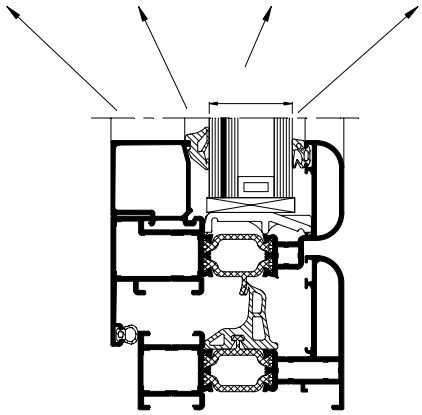

F

D0092072

BEGLAZINGSTABEL INBRAAKWEREND
TABLEAU DE VITRAGE PROTECTION ANTI-VOL
GLAZING TABLE BURGLAR PROTECTION
VERGLASUNGSTABELLE EINBRUCHHEMMEND

Reynaers Aluminium

Voor vaste kader en deurvleugel
Pour dormant et ouvrant porte
For outer frame and door vent
Für Blendrahmen und Haustürflügel

Glaslat Parclose Glazing bead Glasleiste	Beglazingsrubber binnen Joint de vitrage intérieur Glazing gasket inside Verglasungsdichtung innen	Glasdikte Epaisseur de vitrage Glazing thickness Glasdicke	Beglazingsrubber buiten Joint de vitrage extérieur Glazing gasket outside Verglasungsdichtung aussen
030.3650.XX	080.9128.04	16	080.9120.04
030.3650.XX	080.9128.04	17	080.9120.04
030.3650.XX	080.9128.04	18	080.9118.04
030.3650.XX	080.9128.04	19	080.9118.04
030.3650.XX	080.9128.04	20	080.9116.04
030.3650.XX	080.9128.04	21	080.9116.04
030.3650.XX	080.9128.04	22	080.9114.SY
030.3650.XX	080.9128.04	23	080.9114.SY
030.3650.XX	080.9126.SY	24	080.9114.SY
030.3649.XX	080.9128.04	25	080.9114.SY
030.3649.XX	080.9128.04	26	080.9114.SY
030.3649.XX	080.9126.SY	27	080.9114.SY
030.3648.XX	080.9128.04	28	080.9114.SY
030.3648.XX	080.9128.04	29	080.9114.SY
030.3648.XX	080.9126.SY	30	080.9114.SY
030.3647.XX	080.9128.04	31	080.9114.SY
030.3647.XX	080.9128.04	32	080.9114.SY

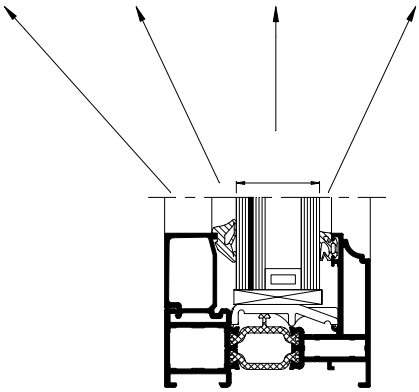

Raamvleugel
Ouvrant fenêtre
Window vent
Fensterflügel

Glaslat Parclose Glazing bead Glasleiste	Beglazingsrubber binnen Joint de vitrage intérieur Glazing gasket inside Verglasungsdichtung innen	Glasdikte Epaisseur de vitrage Glazing thickness Glasdicke	Beglazingsrubber buiten Joint de vitrage extérieur Glazing gasket outside Verglasungsdichtung aussen
030.3670.XX	080.9128.04	16	080.9120.04
030.3670.XX	080.9128.04	17	080.9120.04
030.3670.XX	080.9128.04	18	080.9118.04
030.3670.XX	080.9128.04	19	080.9118.04
030.3670.XX	080.9128.04	20	080.9116.04
030.3670.XX	080.9128.04	21	080.9116.04
030.3670.XX	080.9128.04	22	080.9114.04
030.3670.XX	080.9128.04	23	080.9114.04
030.3670.XX	080.9126.SY	24	080.9114.04
030.3669.XX	080.9128.04	25	080.9114.04
030.3669.XX	080.9128.04	26	080.9114.04
030.3669.XX	080.9126.SY	27	080.9114.04
030.3668.XX	080.9128.04	28	080.9114.04
030.3668.XX	080.9128.04	29	080.9114.04
030.3668.XX	080.9126.SY	30	080.9114.04
030.3667.XX	080.9128.04	31	080.9114.04
030.3667.XX	080.9128.04	32	080.9114.04

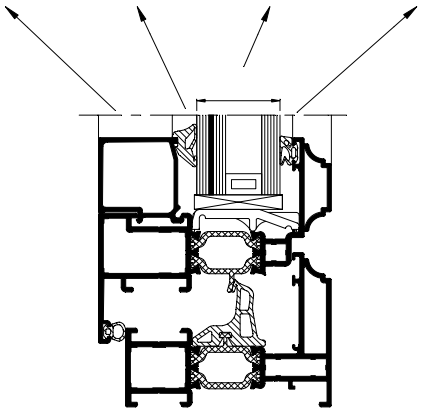

F

D0092072

F

D0092071

Voor vaste kader en deurvleugel / Pour dormant et ouvrant porte / For outer frame and door vent / Für Blendrahmen und Haustürflügel

Glaslat / Parclose / Glazing bead / Glasleiste	Beglazingsrubber binnen / Joint de vitrage intérieur / Glazing gasket inside / Verglasungsdichtung innen	Glasdikte / Epaisseur de vitrage / Glazing thickness / Glasdicke	Beglazingsrubber buiten / Joint de vitrage extérieur / Glazing gasket outside / Verglasungsdichtung aussen
030.3650.XX	080.9130.04	15	080.9120.04
030.3650.XX	080.9128.04	16	080.9120.04
030.3650.XX	080.9128.04	17	080.9120.04
030.3650.XX	080.9128.04	18	080.9118.04
030.3650.XX	080.9128.04	19	080.9118.04
030.3650.XX	080.9128.04	20	080.9116.04
030.3650.XX	080.9128.04	21	080.9116.04
030.3650.XX	080.9128.04	22	080.9114.SY(*)
030.3650.XX	080.9128.04	23	080.9114.SY(*)
030.3650.XX	080.9126.SY	24	080.9114.SY(*)
030.3649.XX	080.9128.04	25	080.9114.SY(*)
030.3649.XX	080.9128.04	26	080.9114.SY(*)
030.3649.XX	080.9126.SY	27	080.9114.SY(*)
030.3648.XX	080.9128.04	28	080.9114.SY(*)
030.3648.XX	080.9128.04	29	080.9114.SY(*)
030.3648.XX	080.9126.SY	30	080.9114.SY(*)
030.3647.XX	080.9128.04	31(!)	080.9114.SY(*)
030.3647.XX	080.9128.04	32 (!)	080.9114.SY(*)

Raamvleugel / Ouvrant fenêtre / Window vent / Fensterflügel

Glaslat / Parclose / Glazing bead / Glasleiste	Beglazingsrubber binnen / Joint de vitrage intérieur / Glazing gasket inside / Verglasungsdichtung innen	Glasdikte / Epaisseur de vitrage / Glazing thickness / Glasdicke	Beglazingsrubber buiten / Joint de vitrage extérieur / Glazing gasket outside / Verglasungsdichtung aussen
030.3670.XX	080.9130.04	15	080.9120.04
030.3670.XX	080.9128.04	16	080.9120.04
030.3670.XX	080.9128.04	17	080.9120.04
030.3670.XX	080.9128.04	18	080.9118.04
030.3670.XX	080.9128.04	19	080.9118.04
030.3670.XX	080.9128.04	20	080.9116.04
030.3670.XX	080.9128.04	21	080.9116.04
030.3670.XX	080.9128.04	22	080.9114.SY(*)
030.3670.XX	080.9128.04	23	080.9114.SY(*)
030.3670.XX	080.9126.SY	24	080.9114.SY(*)
030.3669.XX	080.9128.04	25	080.9114.SY(*)
030.3669.XX	080.9128.04	26	080.9114.SY(*)
030.3669.XX	080.9126.SY	27	080.9114.SY(*)
030.3668.XX	080.9128.04	28	080.9114.SY(*)
030.3668.XX	080.9128.04	29	080.9114.SY(*)
030.3668.XX	080.9126.SY	30	080.9114.SY(*)
030.3667.XX	080.9128.04	31	080.9114.SY(*)
030.3667.XX	080.9128.04	32	080.9114.SY(*)

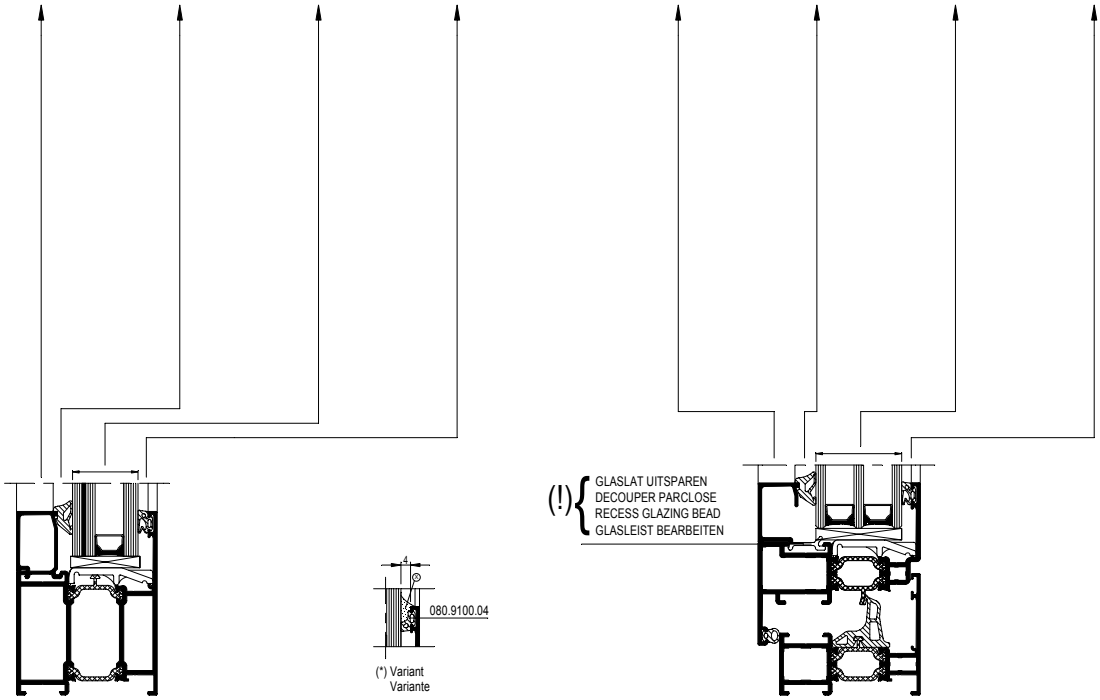

F

D0092071

MONTAGE OPZWELLENDE DICHTING
ASSEMBLAGE JOINT GONFLANT
ASSEMBLY SWELLING GASKET
MONTAGE SCHWELLENDE DICHTUNG

*enkel bij vast raam
*seulement pour fenêtre fixe
*only for fixed window
*nur bei festverglasung

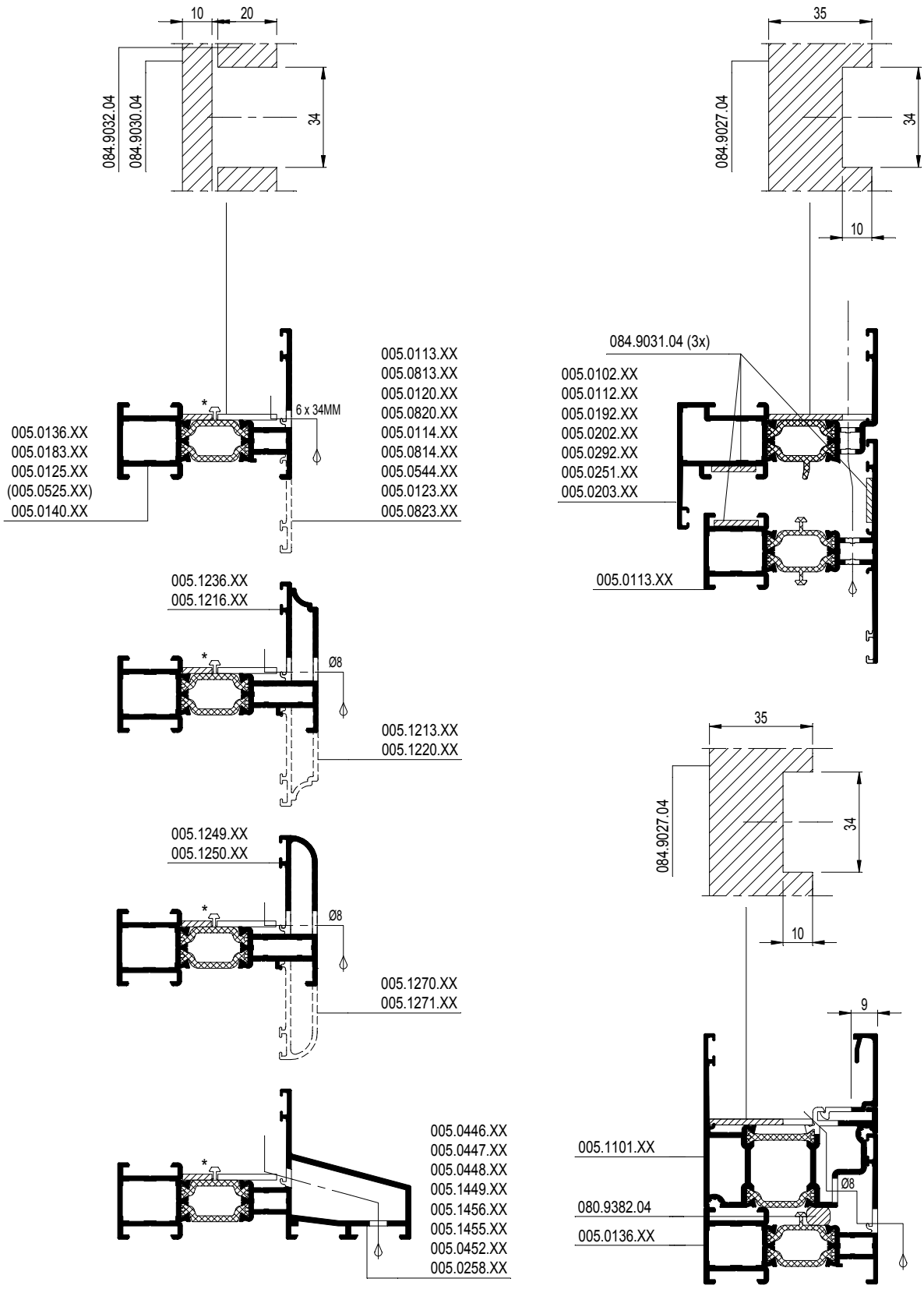

D0081778

F

MONTAGE OPZWELLENDE DICHTING
ASSEMBLAGE JOINT GONFLANT
ASSEMBLY SWELLING GASKET
MONTAGE SCHWELLENDE DICHTUNG

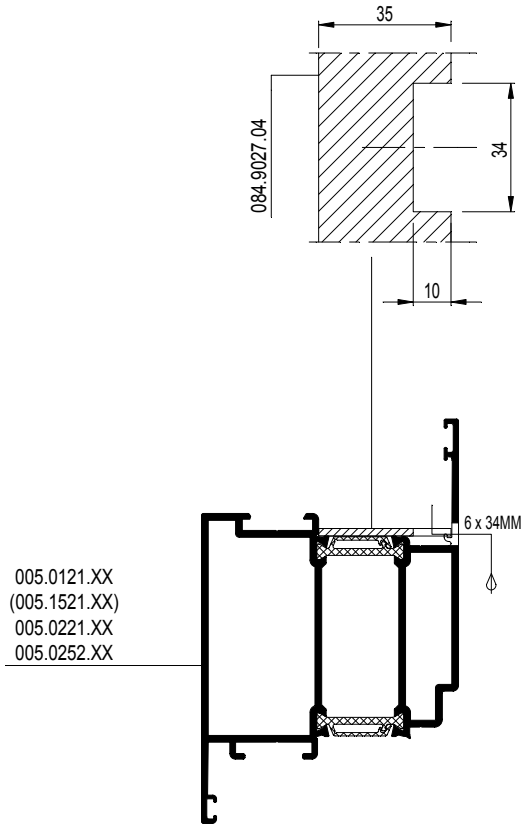

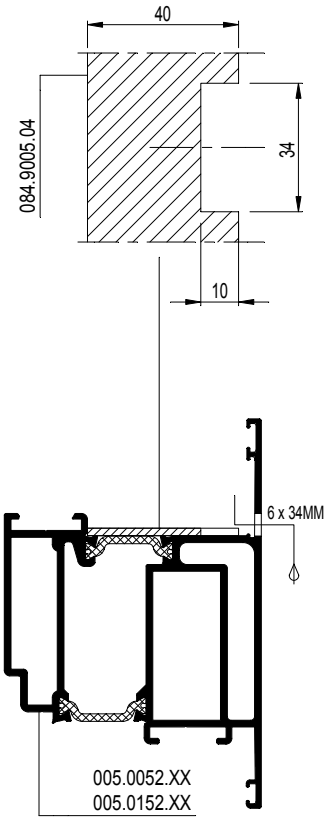

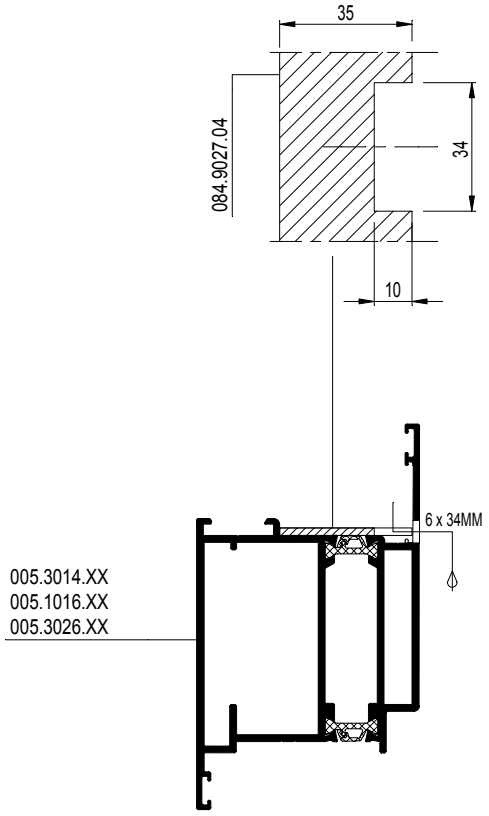

F

D0081778

BEGLAZINGSMETHODE - GLASKLIPSEN
METHODE DE VITRAGE - CLIPPES DE VITRAGE
GLAZING METHOD - GLAZING CLIPS
VERGLASUNGSWEISE - GLASKLEMMEN

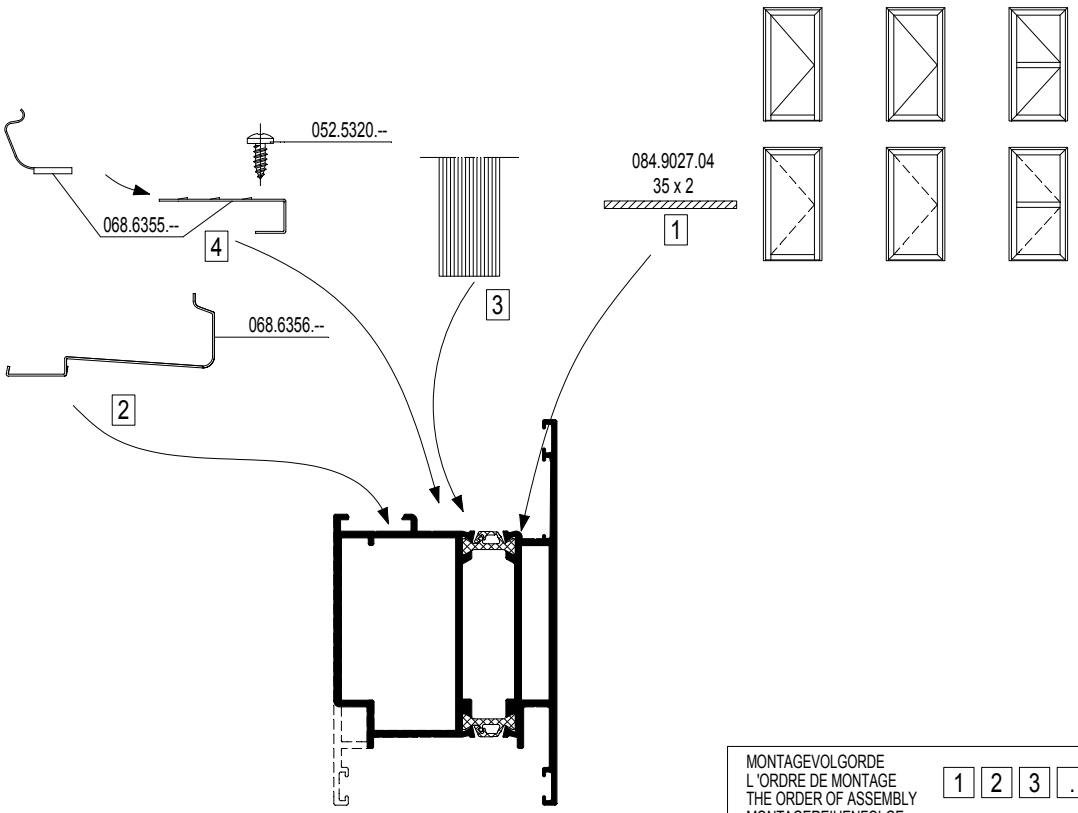

MONTAGEVOLGORDE L 'ORDRE DE MONTAGE THE ORDER OF ASSEMBLY MONTAGEREIHENFOLGE	1	2	3	.

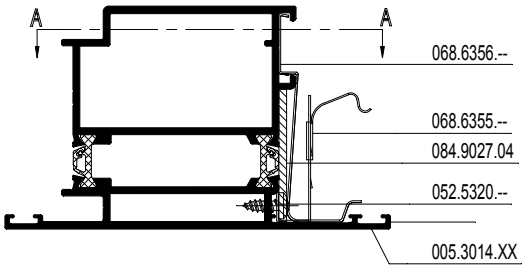

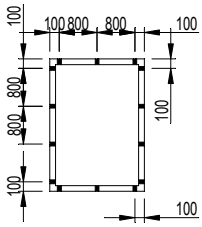

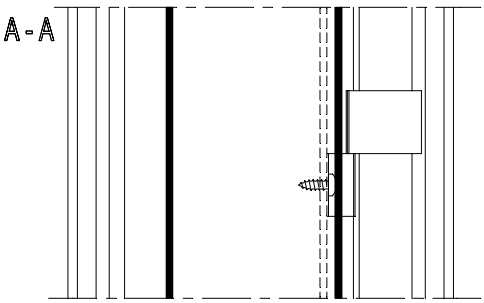

Tussenafstand glasklipsen max. 800mm
Distance intermédiaire clippes de vitrage max 800mm
Max intermediate distance glazing clips 800mm
Maximalzwischen Abstand Glasklemmen 800mm

F

D0081812

BEGLAZINGSMETHODE - GLASKLIPSEN
METHODE DE VITRAGE - CLIPPES DE VITRAGE
GLAZING METHOD - GLAZING CLIPS
VERGLASUNGSWEISE - GLASKLEMMEN

Brandwerende glasklipsen voor binnenzijde
Clippes de vitrage anti-feu pour interieur
Fire proof glazing clips for inside
Feuerhemmende Glasklemmen Innenseite

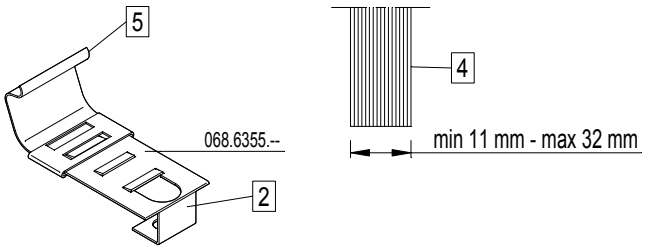

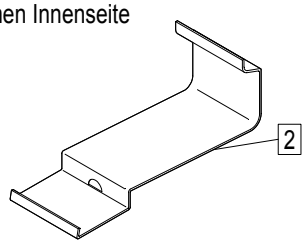

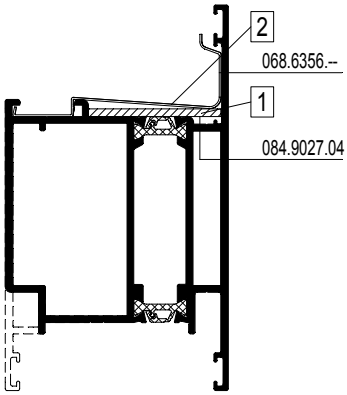

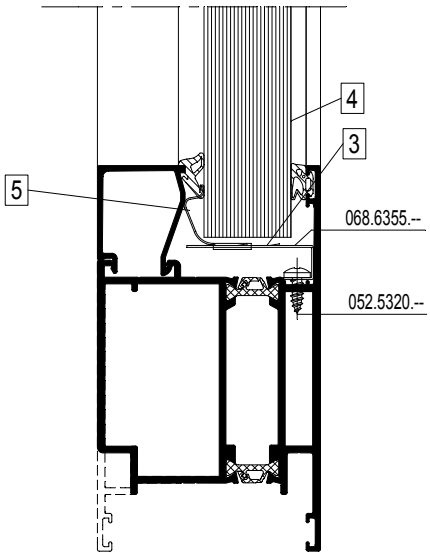

F

D0081812

BEGLAZINGSMETHODE - GLASKLIPSEN
METHODE DE VITRAGE - CLIPPES DE VITRAGE
GLAZING METHOD - GLAZING CLIPS
VERGLASUNGSWEISE - GLASKLEMMEN

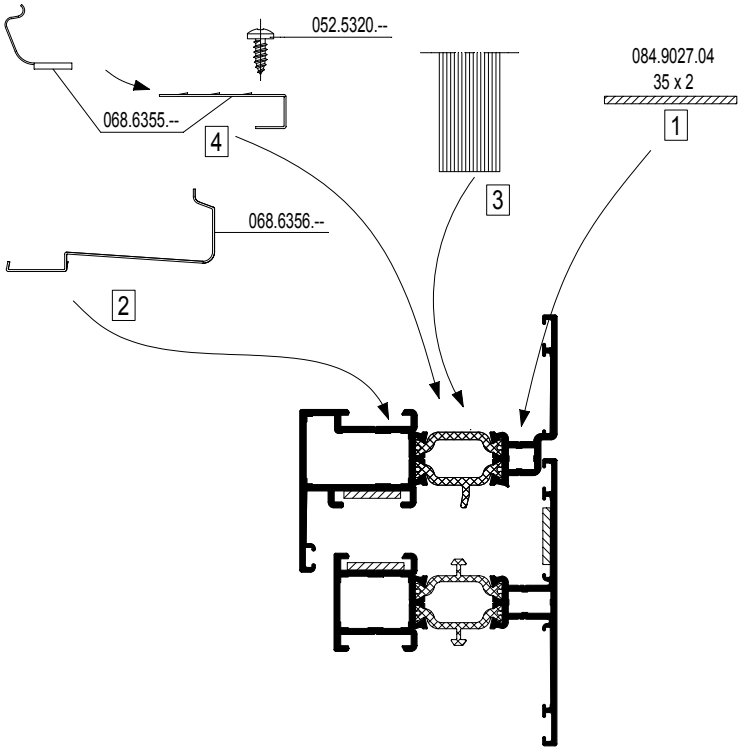

MONTAGEVOLGORDE L 'ORDRE DE MONTAGE THE ORDER OF ASSEMBLY MONTAGEREIHENFOLGE	1	2	3	.

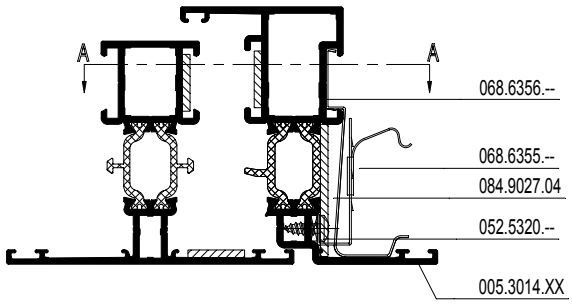

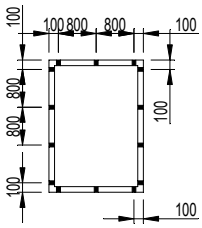

Tussenafstand glasklipsen max. 800mm
Distance intermédiaire clippes de vitrage max 800mm
Max intermediate distance glazing clips 800mm
Maximalzwischen Abstand Glasklemmen 800mm

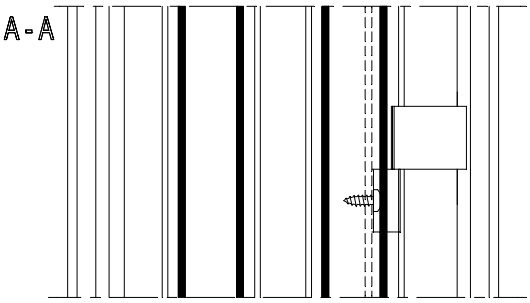

F

D0081813

BEGLAZINGSMETHODE - GLASKLIPSEN
METHODE DE VITRAGE - CLIPPES DE VITRAGE
GLAZING METHOD - GLAZING CLIPS
VERGLASUNGSWEISE - GLASKLEMMEN

Brandwerende glasklipsen voor binnenzijde
Clippes de vitrage anti-feu pour interieur
Fire proof glazing clips for inside
Feuerhemmende Glasklemmen Innenseite

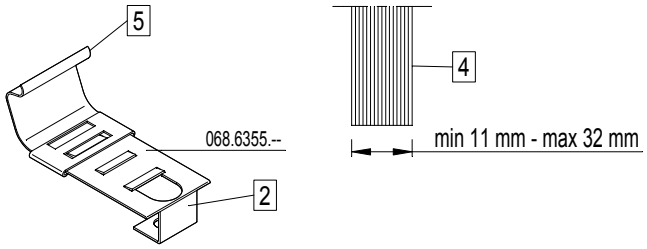

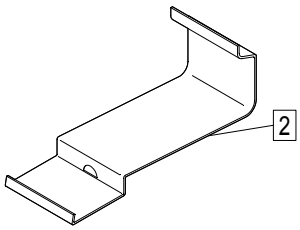

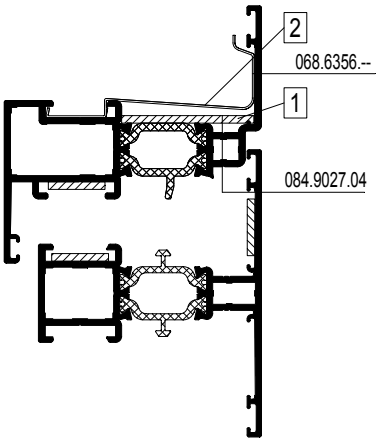

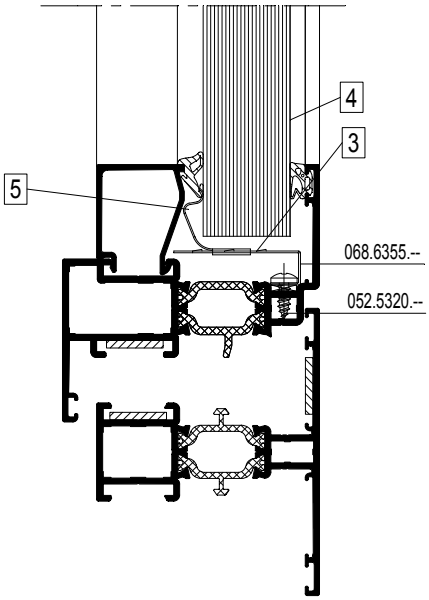

F

D0081813

BEGLAZINGSMETHODE
METHODE DE VITRAGE
GLAZING METHOD
VERGLASUNGSWEISE

030.3667.XX 030.3668.XX 030.3669.XX 030.3670.XX

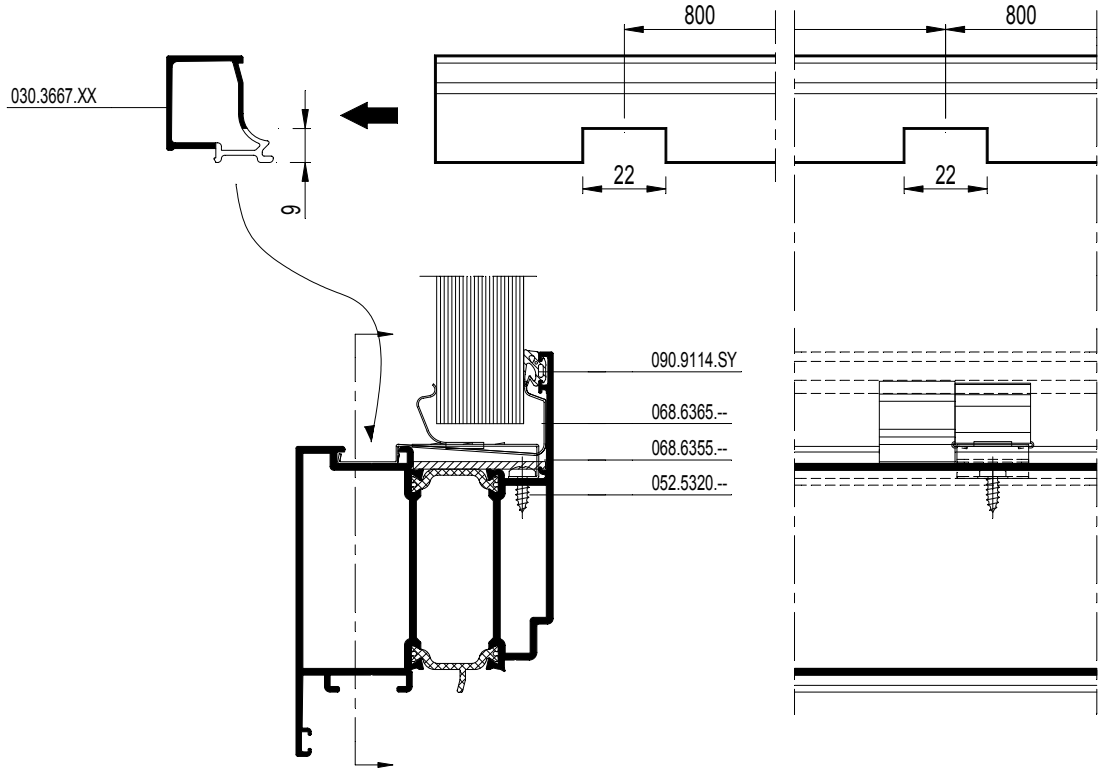

D0081816

BEGLAZINGSMETHODE
METHODE DE VITRAGE
GLAZING METHOD
VERGLASUNGSWEISE

030.3647.XX 030.3648.XX 030.3649.XX 030.3650.XX	

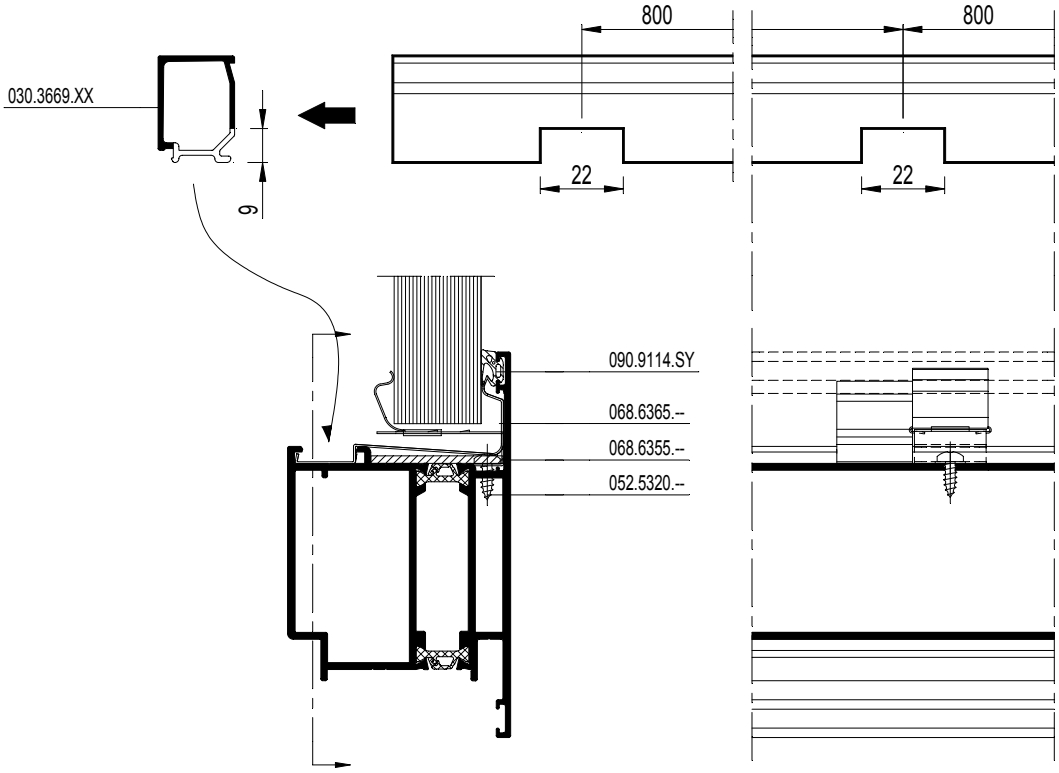

F

D0081816

OVERZICHT SLOTEN RAAMDEUREN SOBINCO
APERCU SERRURES FENETRES-PORTES SOBINCO
OVERVIEW LOCKS WINDOW-DOORS SOBINCO
UEBERSICHT SCHLOESSER FENSTERTUREN SOBINCO

		VAR. A
Sobinco 5 061.7454.ZC*** H=2170	061.7704.-- or 2x 061.7699.--	061.7705.--

	VAR. A*	VAR. B*	VAR. D*	VAR. E*
Sobinco 5 061.7456.ZC*** H=2170	061.7703.-- or 2x 061.7698.--	061.7704.-- or 2x 061.7699.--	061.7705.--	or 061.7704.-- or 2x 061.7699.--

		VAR. A
Sobinco 5 061.7354.ZC*** H=2370**	061.7704.-- or 2x 061.7699.--	061.7705.--

	VAR. A*	VAR. B*	VAR. D*	VAR. E*
Sobinco 5 061.7356.ZC*** H=2370**	061.7703.-- or 2x 061.7698.--	061.7704.-- or 2x 061.7699.--	061.7706.--	or 061.7704.-- or 2x 061.7699.--

*

Var. A,B en D te gebruiken bij alle raamdeuren behalve bij vleugelprofiel 00X.1402.XX, 00X.1492.XX, 00X.1412.XX en 00X.1421.XX.
Var. E enkel te gebruiken bij raamdeuren met vleugelprofiel 00X.0052.XX.
Var. A, B et D à employer pour toutes portes-fenêtres sauf les ouvrants fenêtre 00X.1402.XX, 00X.1492.XX, 00X.1412.XX en 00X.1421.XX.
Var. E seulement à employer pour portes-fenêtres avec ouvrants 00X.0052.XX.
Var. A, B and D to be applied for all window doors except window vents 00X.1402.XX, 00X.1492.XX, 00X.1412.XX en 00X.1421.XX.
Var. E only to be applied for window doors with vent profiles 00X.0052.XX.
Var. A, B und D anzuwenden für alle Fenstertüren außer den Flügelprofilen 00X.1402.XX, 00X.1492.XX, 00X.1412.XX en 00X.1421.XX.
Var. E nur anzuwenden für Fenstertüren mit Flügelprofilen 00X.0052.XX.

***

Altijd in combinatie met 2 x 061.6455.--
Seulement à être utilisé avec 2 x 061.6455.--
Always in combination with 2 x 061.6455.--
Immer in kombination mit 2 x 061.6455.--

F

D0081835

OVERZICHT DEURKRUKKEN
APERCU DES BEQUILLES
OVERVIEW DOOR HANDLES
UEBERSICHT TUERDRUECKER

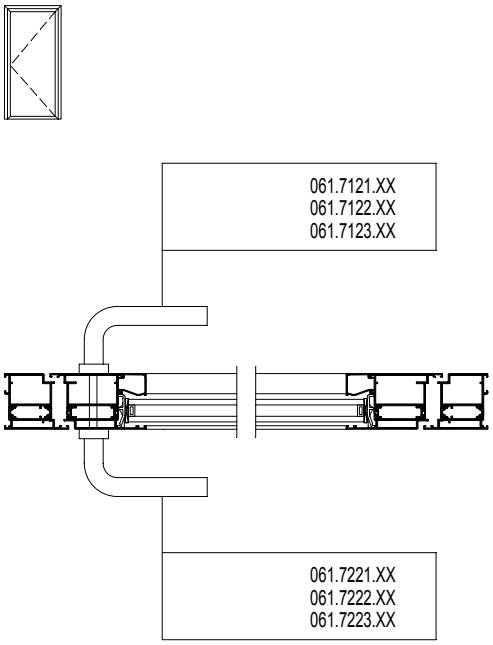

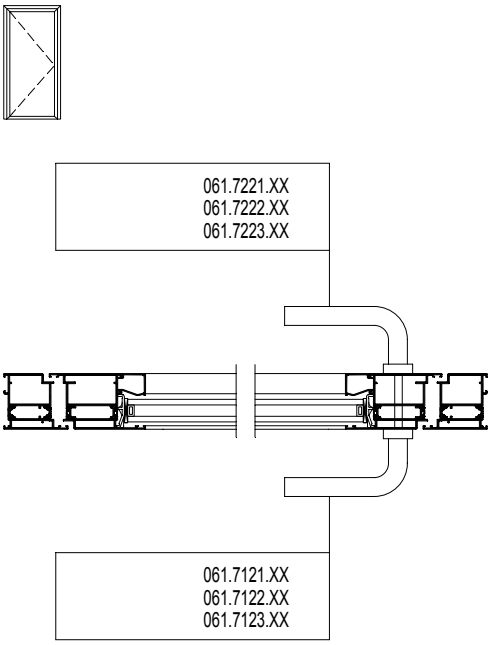

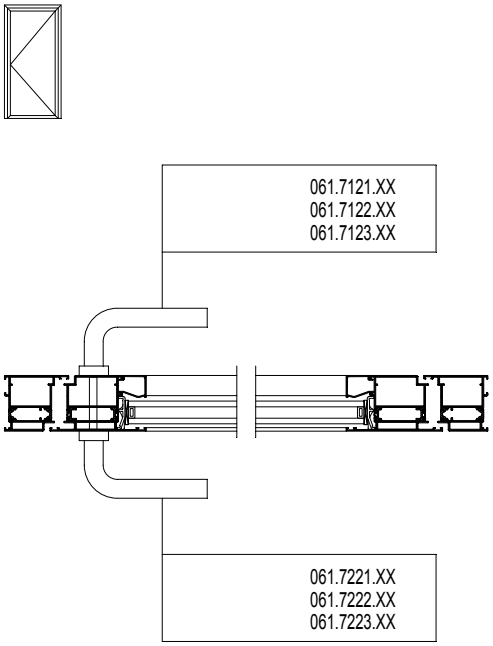

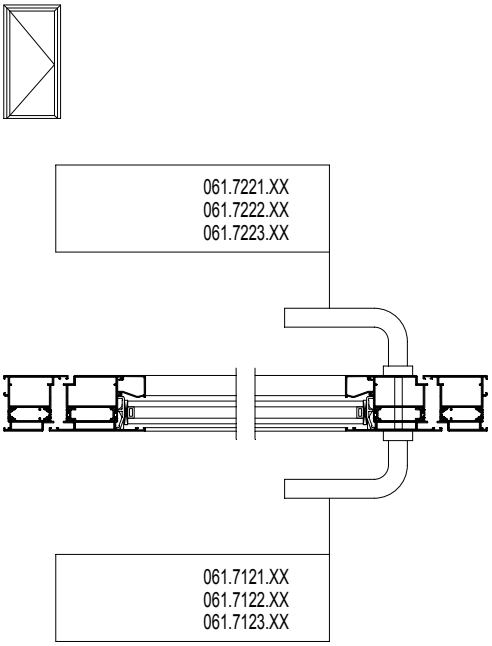

Voor toepassing Shield krukken zie Opening doors

F

D0081835

UITFREZING DEURKRUKKEN FUHR
FRAISAGE BEQUILLES FUHR
MILLING DOOR HANDLES FUHR
AUSFRAESUNG TUERDRUECKER FUHR

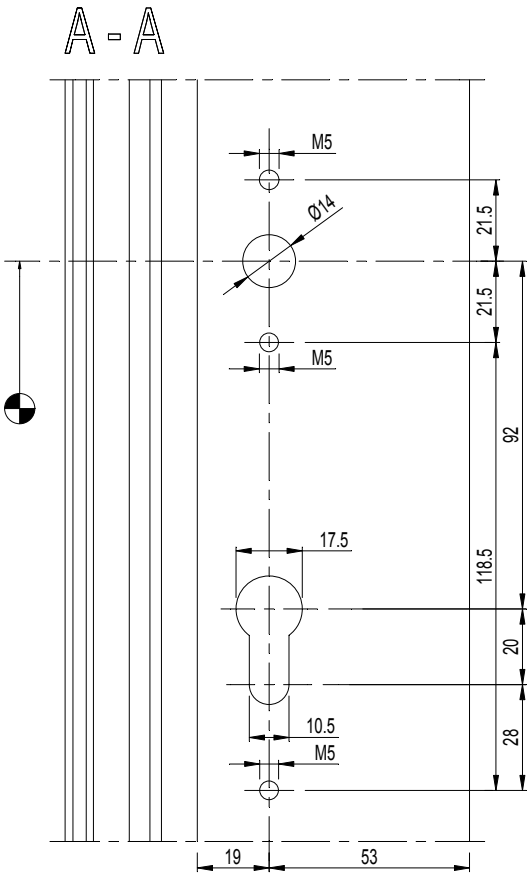

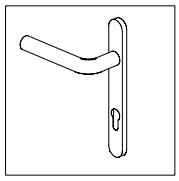

DEURKRUK BEQUILLE DOOR HANDLE TUERDRUECKER
061.7121.XX 061.7122.XX 061.7123.XX 061.7221.XX 061.7222.XX 061.7223.XX 061.7224.XX*
FBmin = 900mm
* FBmin = 1350mm

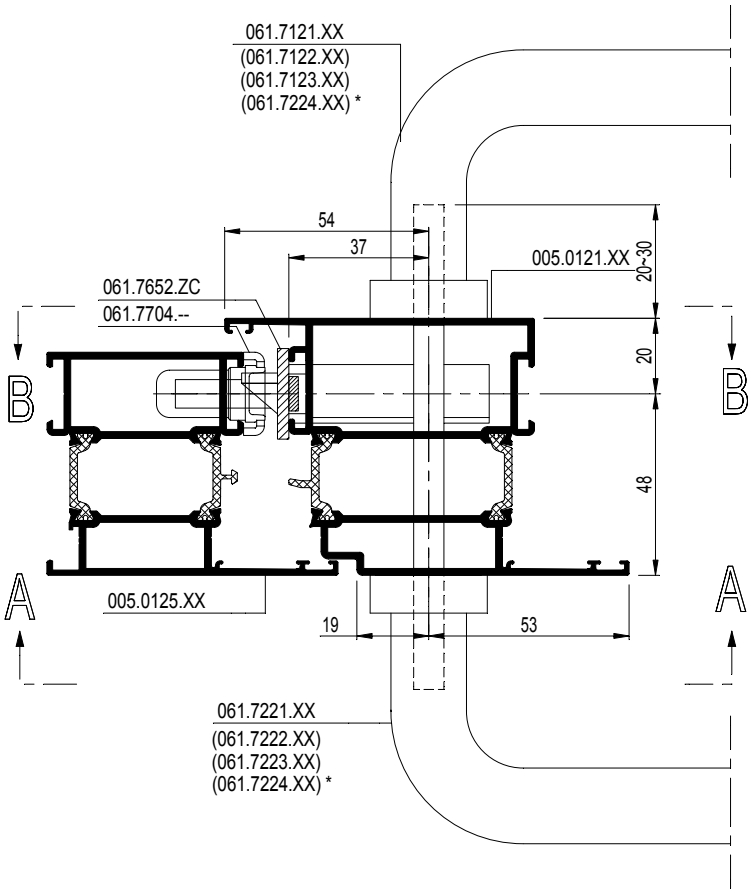

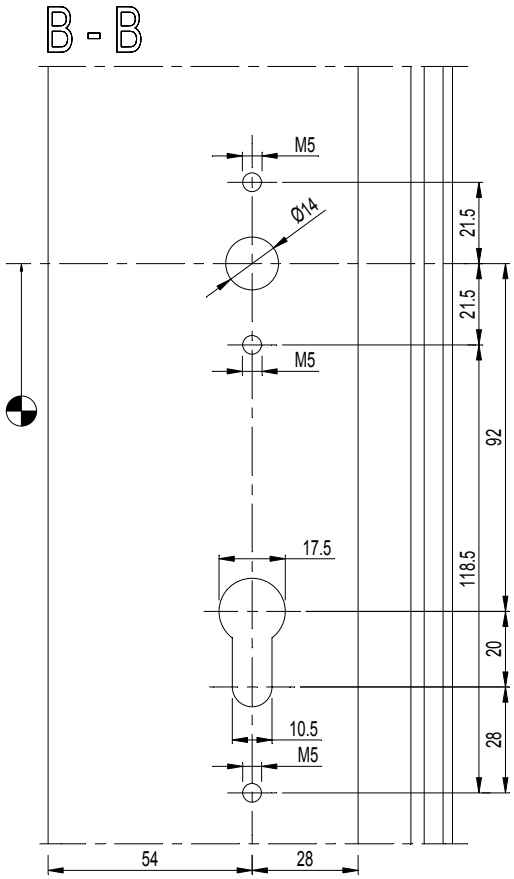

D0081829

F

UITFREZING DEURKRUKKEN FUHR
FRAISAGE BEQUILLES FUHR
MILLING DOOR HANDLES FUHR
AUSFRAESUNG TUERDRUECKER FUHR

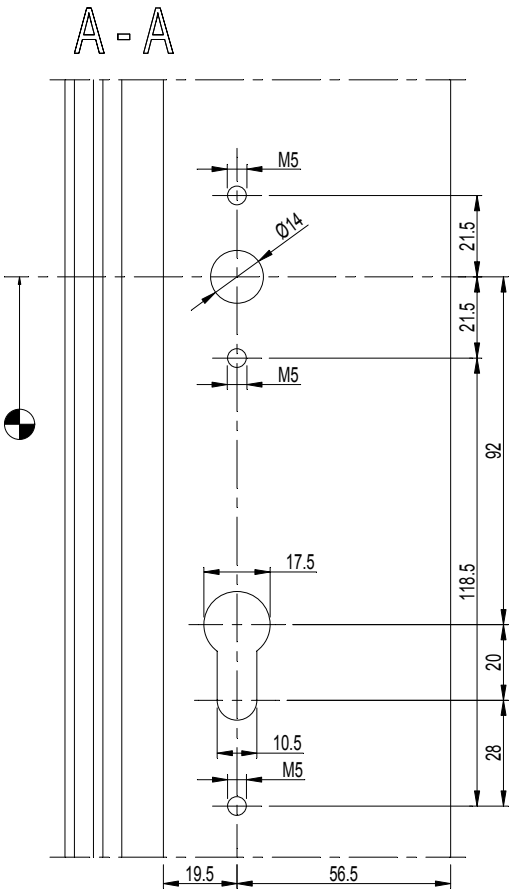

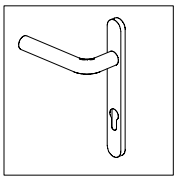

DEURKRUK BEQUILLE DOOR HANDLE TUERDRUECKER
061.7121.XX 061.7122.XX 061.7123.XX 061.7221.XX 061.7222.XX 061.7223.XX 061.7224.XX*
FBmin = 900mm
* FBmin = 1350mm

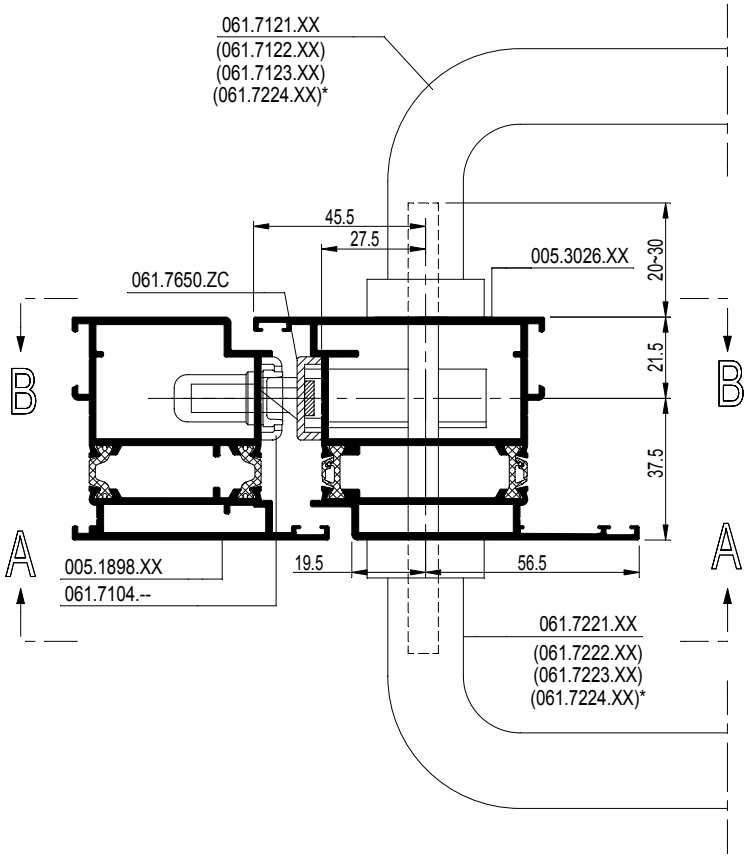

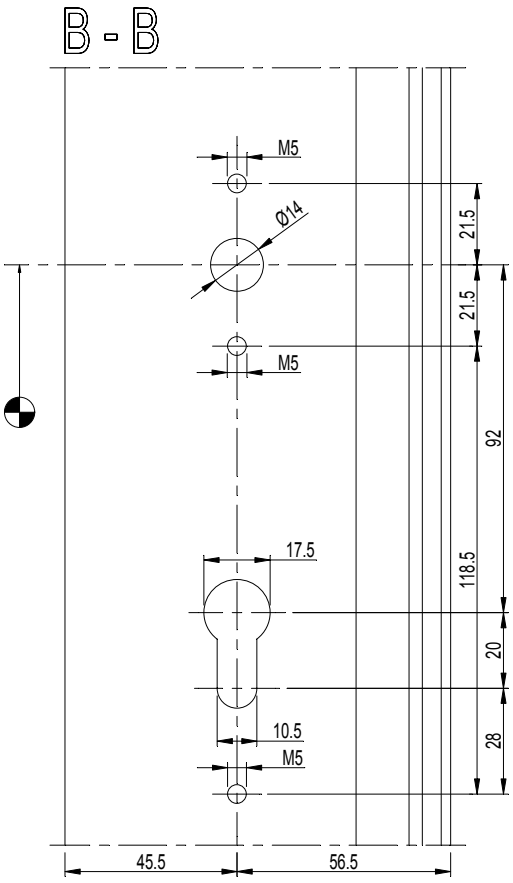

F

D0081829

UITFREZING DEURKRUKKEN SOBINCO
FRAISAGE BEQUILLES SOBINCO
MILLING DOOR HANDLES SOBINCO
AUSFRAESUNG TUERDRUECKER SOBINCO

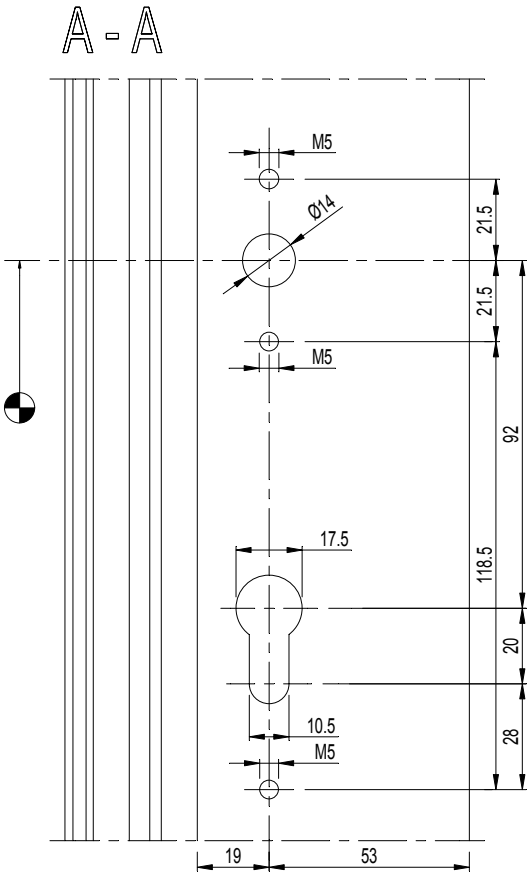

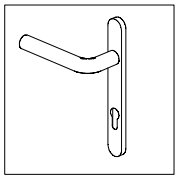

DEURKRUK BEQUILLE DOOR HANDLE TUERDRUECKER
061.7121.XX 061.7122.XX 061.7123.XX 061.7221.XX 061.7222.XX 061.7223.XX 061.7224.XX *
FBmin = 900mm
* FBmin = 1350mm

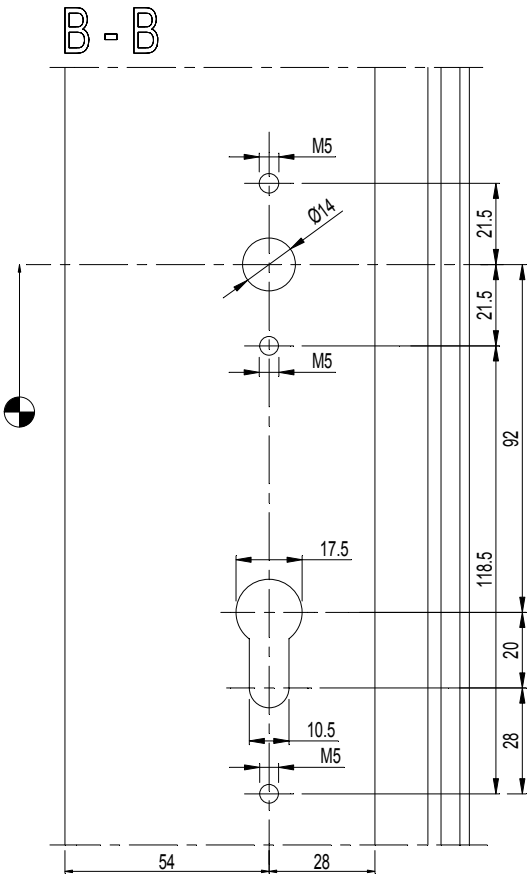

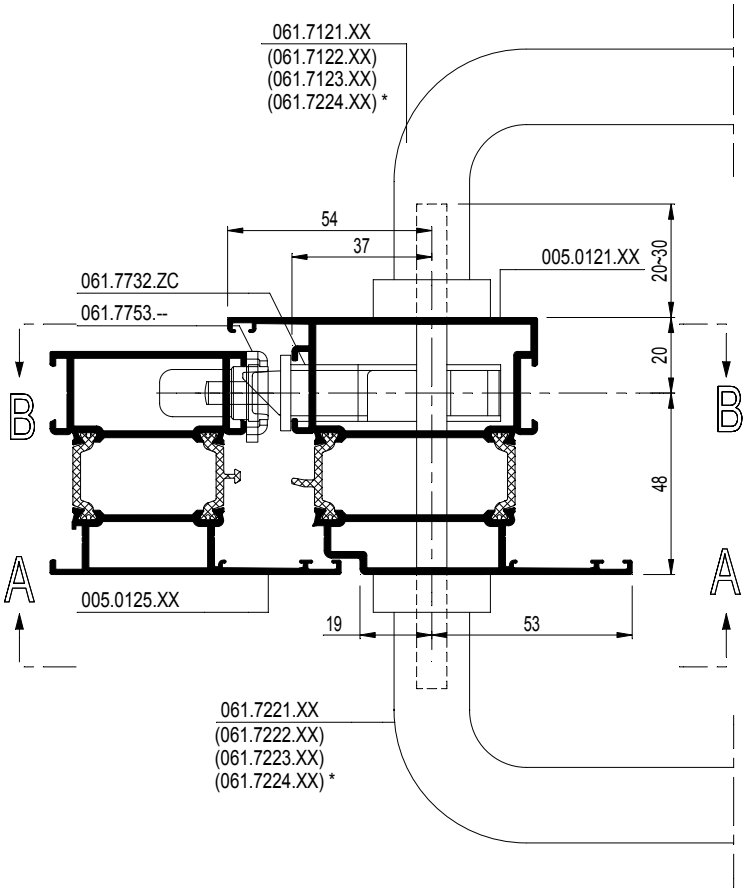

D0081831

F

UITFREZING DEURKRUKKEN SOBINCO
FRAISAGE BEQUILLES SOBINCO
MILLING DOOR HANDLES SOBINCO
AUSFRAESUNG TUERDRUECKER SOBINCO

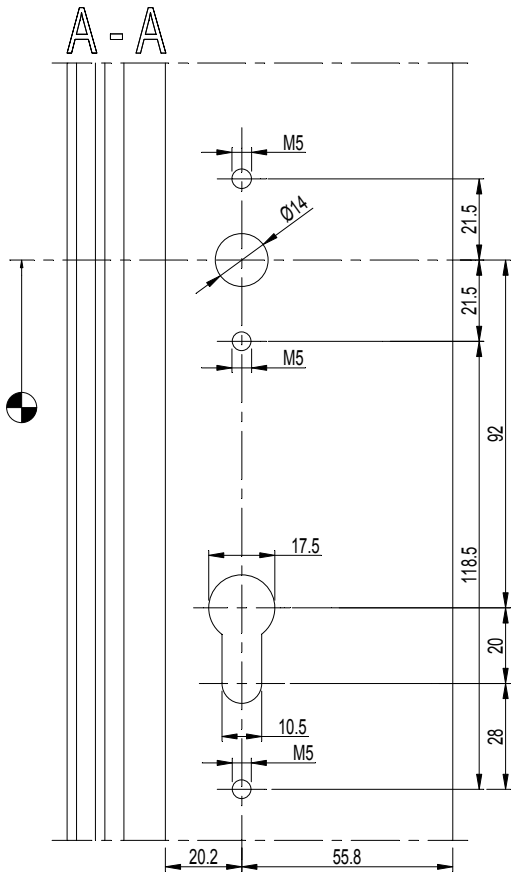

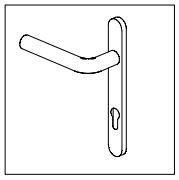

DEURKRUK BEQUILLE DOOR HANDLE TUERDRUECKER
061.7121.XX 061.7122.XX 061.7123.XX 061.7221.XX 061.7222.XX 061.7223.XX 061.7224.XX *
FBmin = 900mm
* FBmin = 1350mm

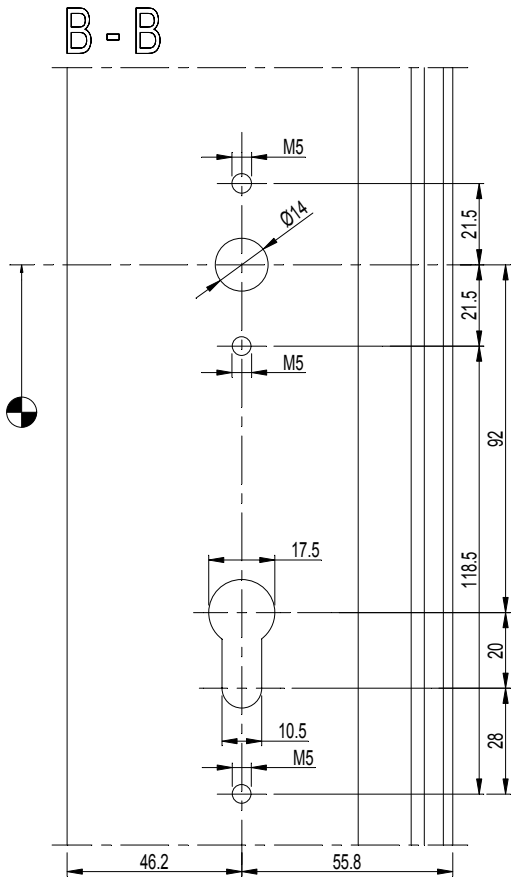

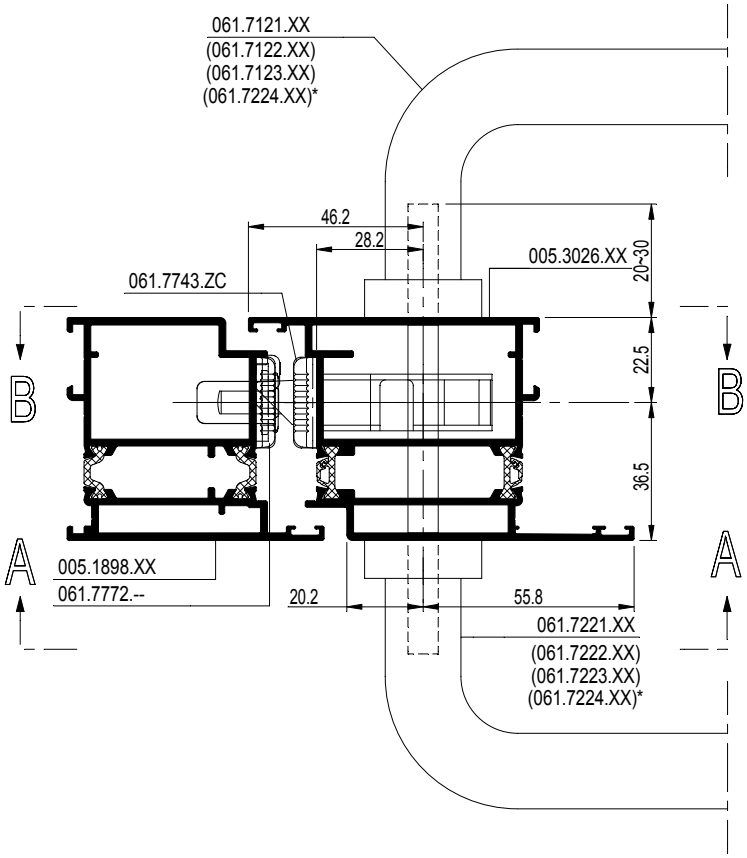

F

D0081831

UITFREZING 5-PUNTSLOT SOBINCO
FRAISAGE FERMETURE A 5 POINTS SOBINCO
MILLING 5 POINT LOCK SOBINCO
AUSFRAESUNG 5-FACHVERRIEGELUNG SOBINCO

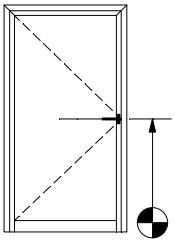

Referentiemaat
Dimension de référence
Referenzmass
Reference dimension

5	061.7454.ZC
	en - et - and - und 061.7704.-- (inox + zamac)
	en - et - and - und 2 x 061.7699.-- (inox + zamac)

	095.A700.00		095.A731.00* en - et - and - und 095.A746.00**
of - ou - oder - or			
	095.B300.00		095.B320.00* en - et - and - und 095.B331.00**

D0081862

F

CS 68-FP
EW 30

UITFREZING 5-PUNTSLOT SOBINCO
FRAISAGE FERMETURE A 5 POINTS SOBINCO
MILLING 5 POINT LOCK SOBINCO
AUSFRAESUNG 5-FACHVERRIEGELUNG SOBINCO

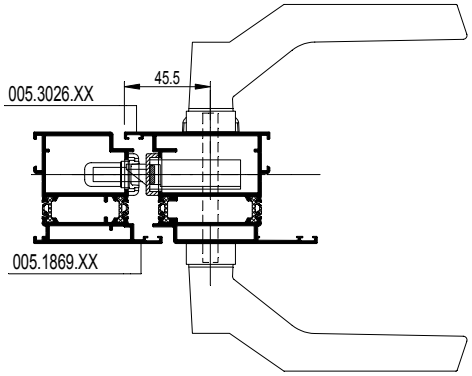

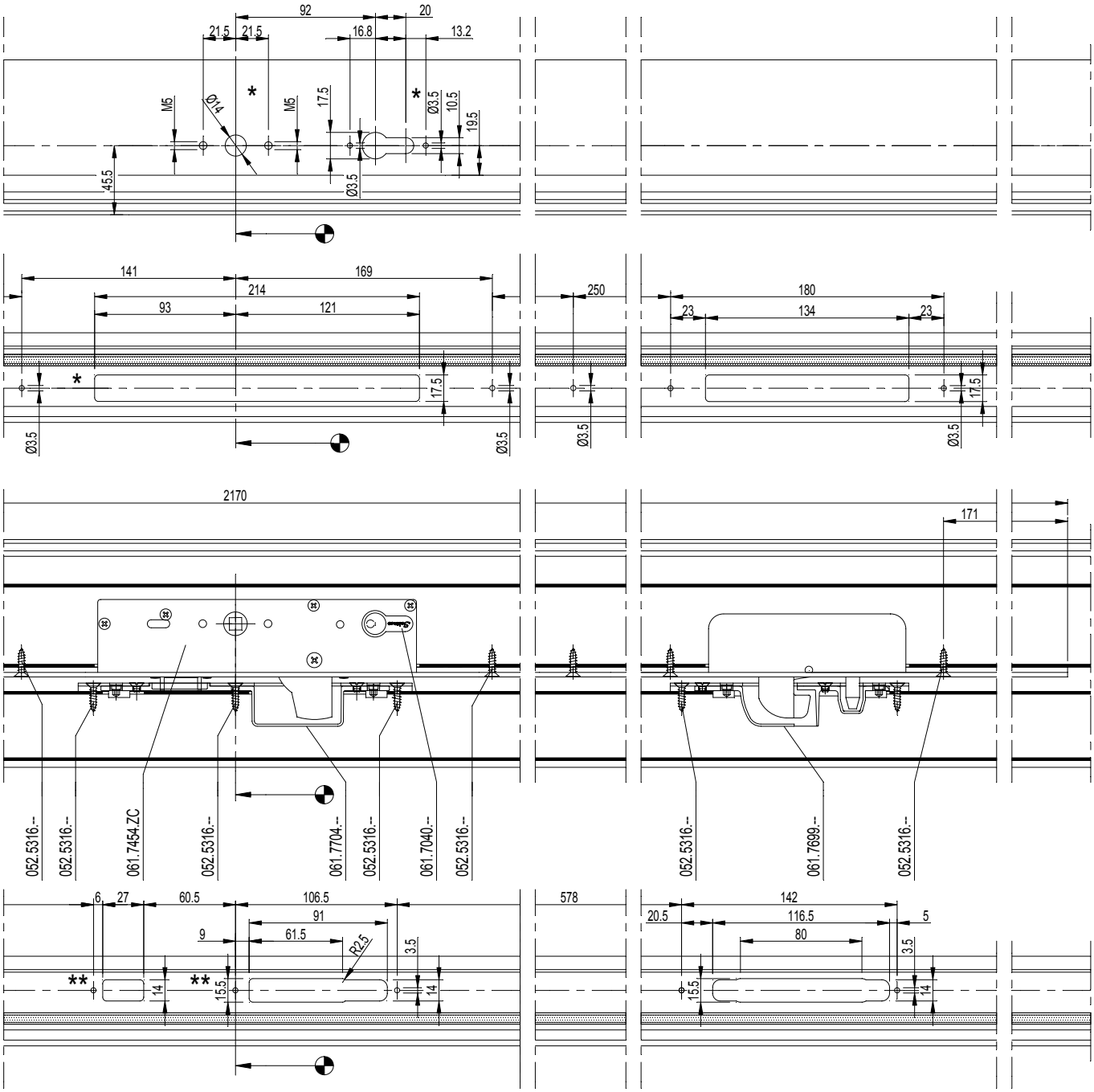

F

D0081862

CS 68-FP
EW 30

UITFREZING 5-PUNTSLOT SOBINCO VAR. A
FRAISAGE FERMETURE A 5 POINTS SOBINCO VAR. A
MILLING 5 POINT LOCK SOBINCO VAR. A
AUSFRAESUNG 5-FACHVERRIEGELUNG SOBINCO VAR. A

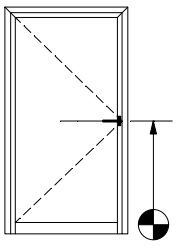

Referentiemaat
Dimension de référence
Reference dimension
Referenzmass

5	061.7454.ZC
	en - et - and - und
	061.7705.--

	095.A700.00		095.A731.00* en - et - and - und 095.A746.00**
of - ou - oder - or			
	095.B300.00		095.B320.00* en - et - and - und 095.B331.00**

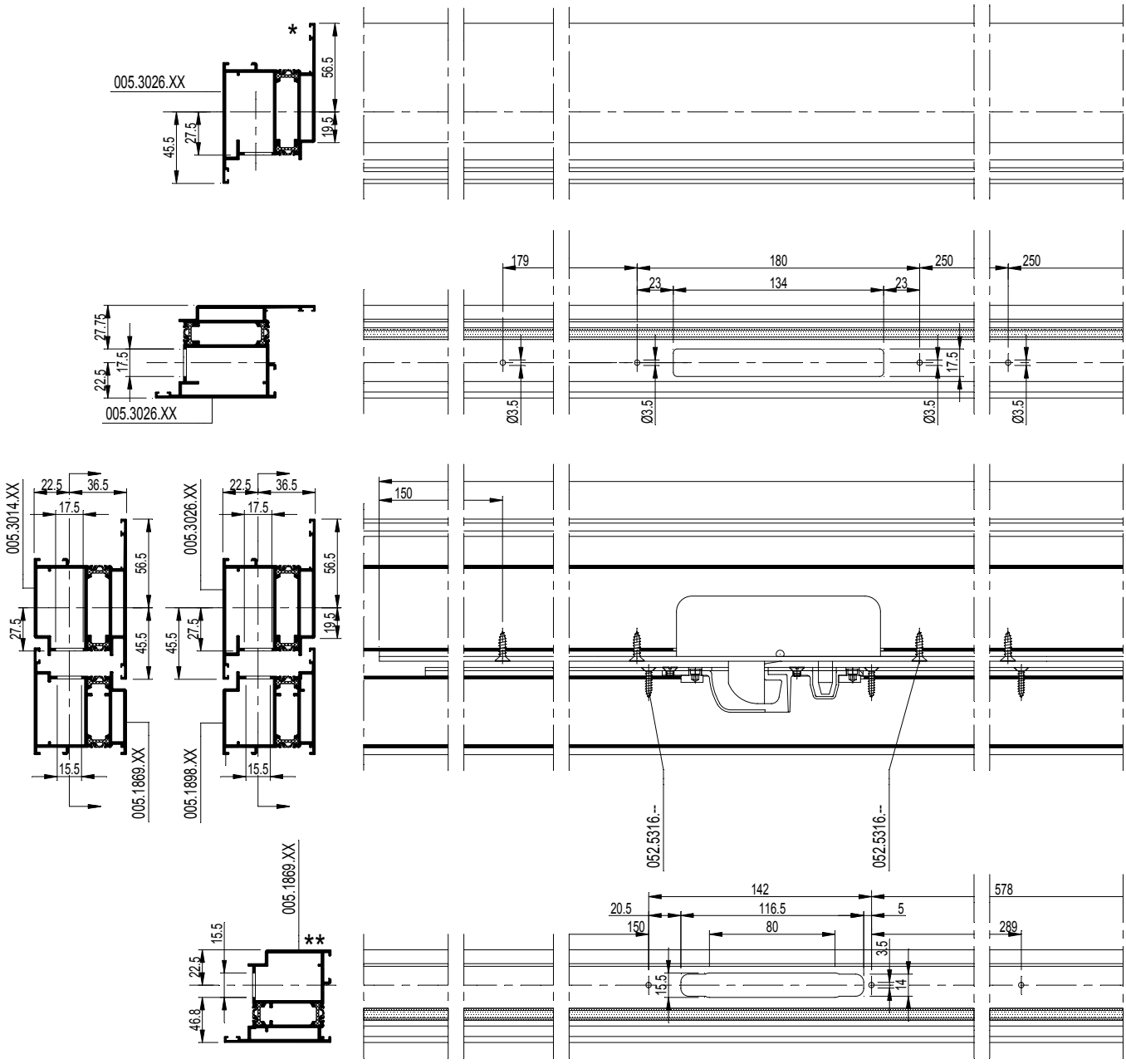

F

D0081859

UITFREZING 5-PUNTSLOT SOBINCO VAR. A
FRAISAGE FERMETURE A 5 POINTS SOBINCO VAR. A
MILLING 5 POINT LOCK SOBINCO VAR. A
AUSFRAESUNG 5-FACHVERRIEGELUNG SOBINCO VAR. A

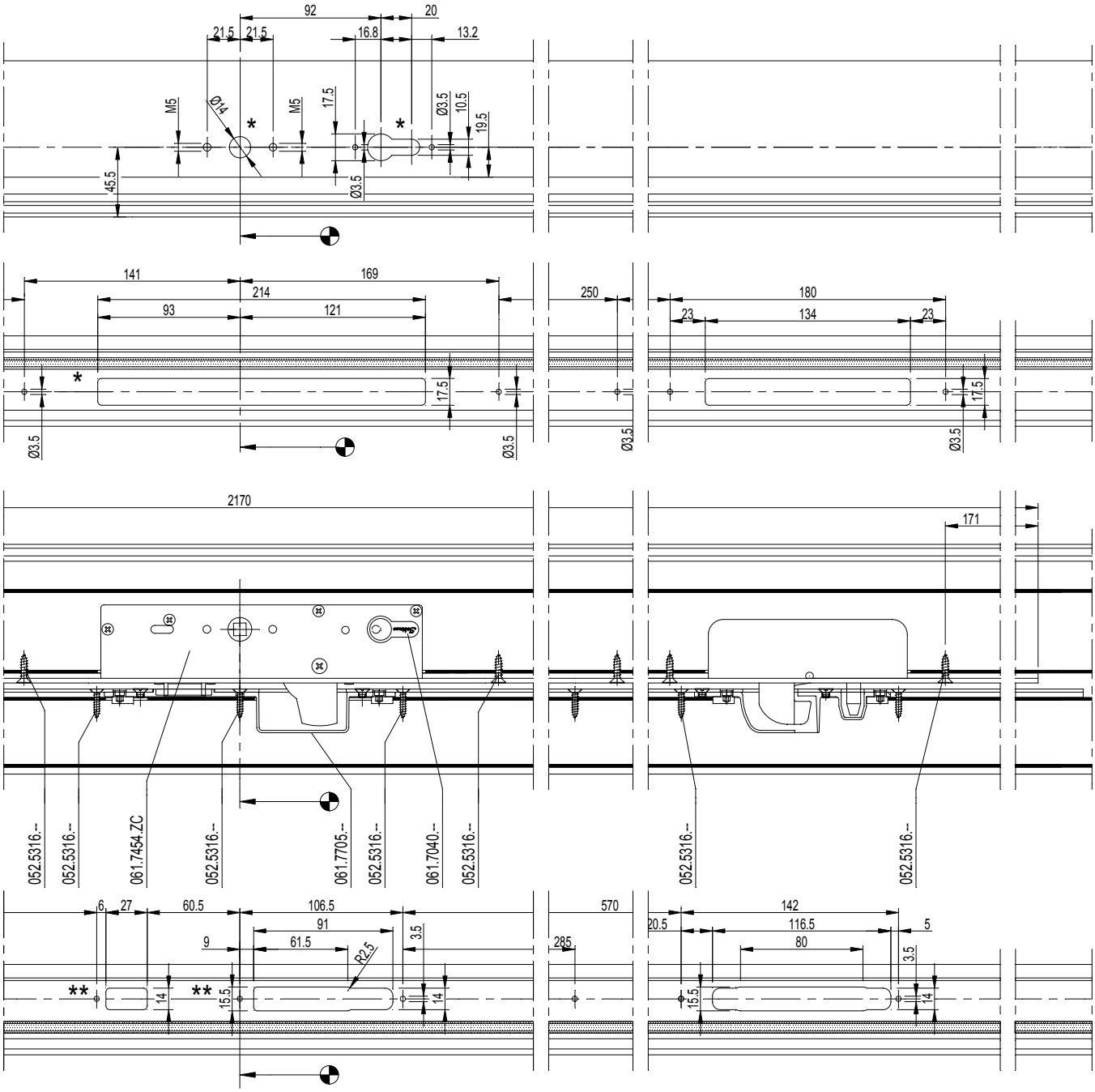

F

D0081859

UITFREZING 5-PUNTSLOT RAAMDEUR SOBINCO VAR. B
FRAISAGE FERM. A 5 P PORTE-FENETRE SOBINCO VAR. B
MILLING 5 POINT LOCK WINDOW-DOOR SOBINCO VAR. B
AUSFRAESUNG 5-F VER. FENSTERTUER SOBINCO VAR. B

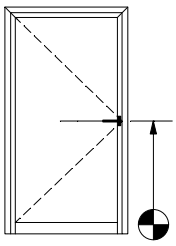

Referentiemaat
Dimension de référence
Reference dimension
Referenzmass

5	061.7456.ZC
	en - et - and - und 061.7703.-- (inox)
	en - et - and - und 2 x 061.7698.-- (inox)

	095.A700.00		095.A731.00
of - ou - or - oder			
	095.B300.00		095.B320.00

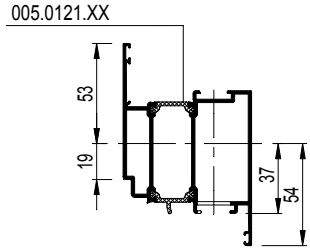

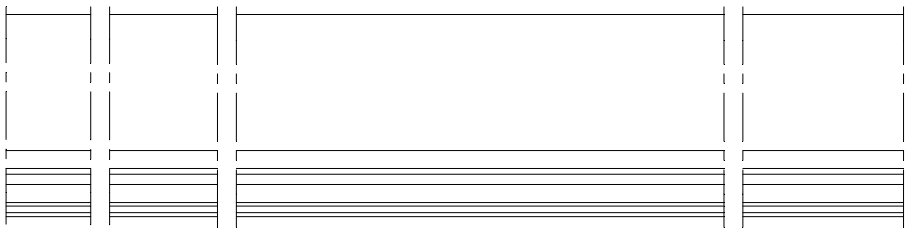

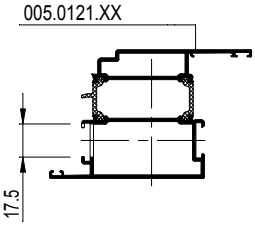

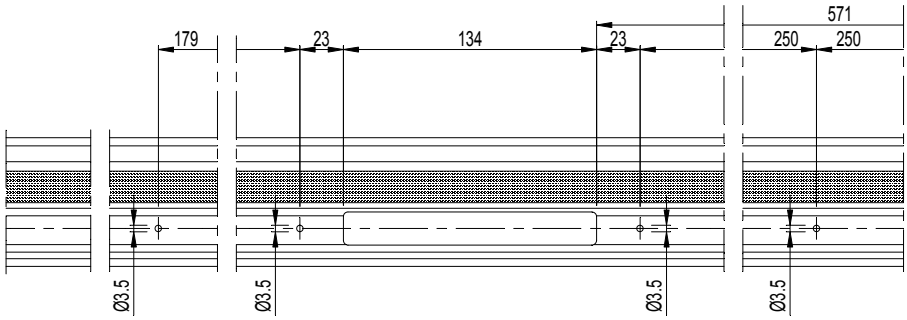

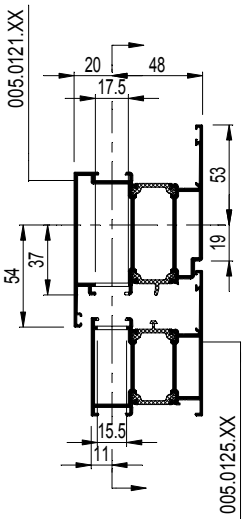

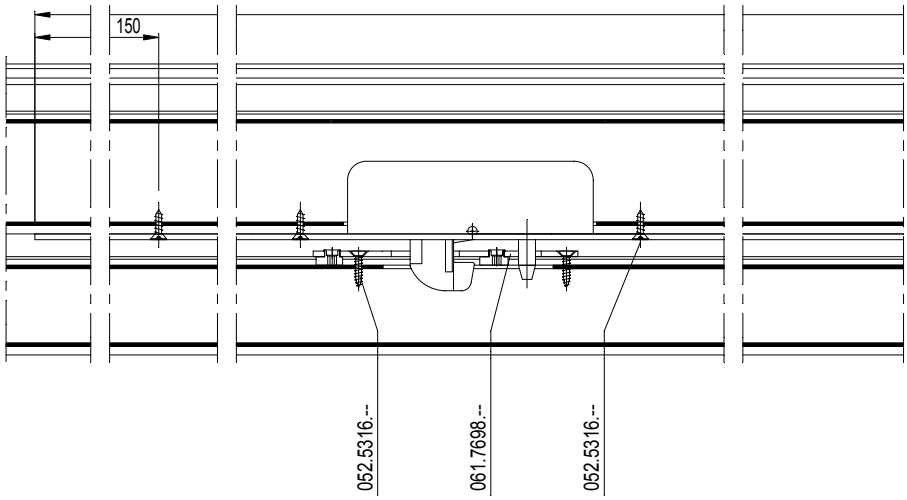

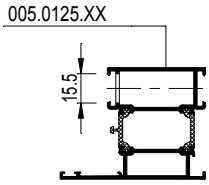

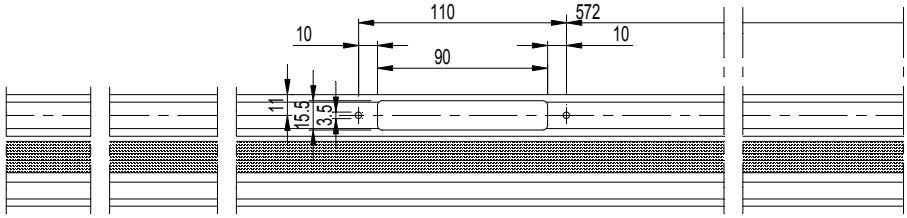

D0081848

F

UITFREZING 5-PUNTSLOT RAAMDEUR SOBINCO VAR. B
FRAISAGE FERM. A 5 P PORTE-FENETRE SOBINCO VAR. B
MILLING 5 POINT LOCK WINDOW-DOOR SOBINCO VAR. B
AUSFRAESUNG 5-F VER. FENSTERTUER SOBINCO VAR. B

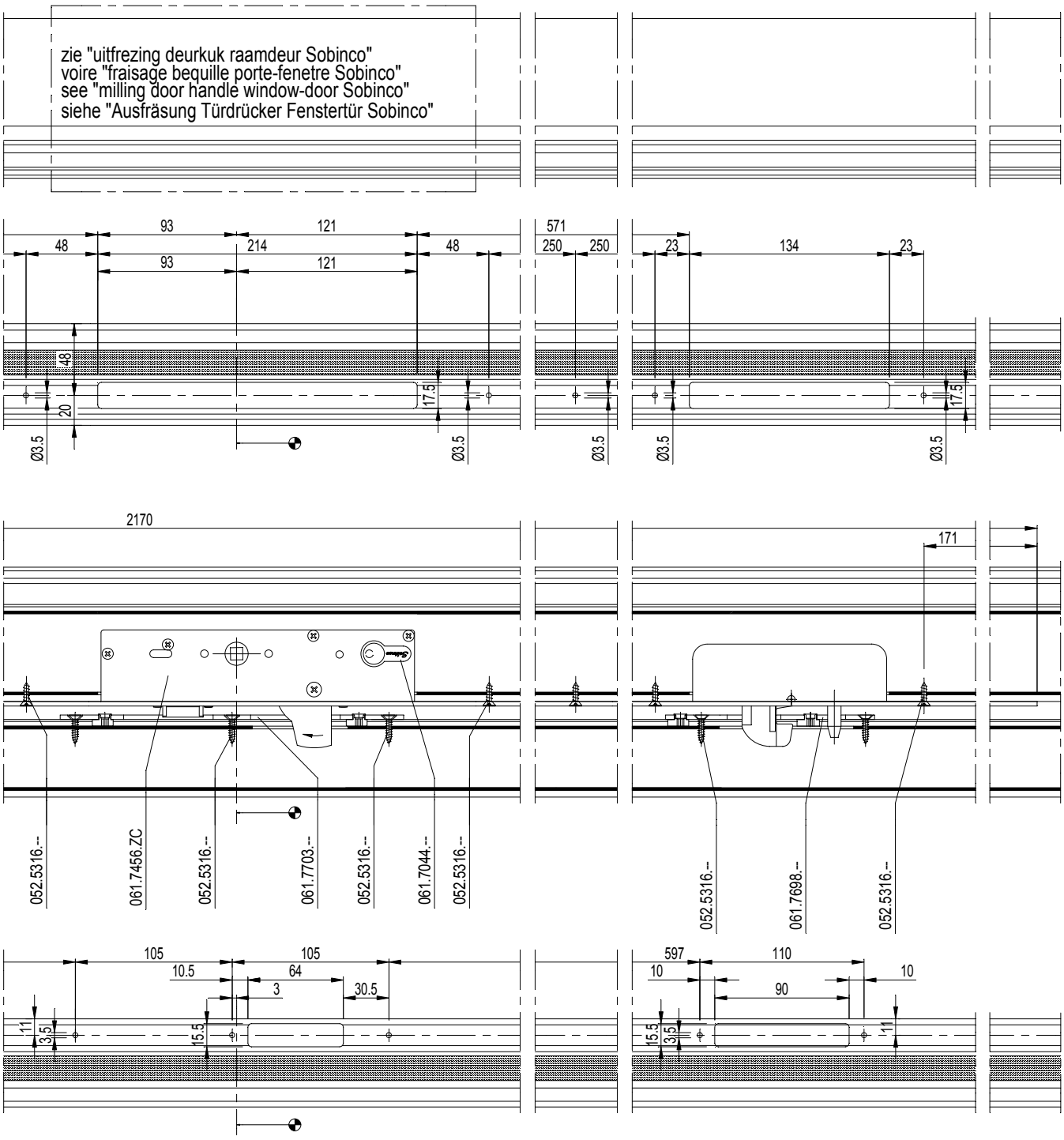

F

D0081848

UITFREZING 5-PUNTSLOT RAAMDEUR SOBINCO VAR. A
FRAISAGE FERM. A 5 P PORTE-FENETRE SOBINCO VAR. A
MILLING 5 POINT LOCK WINDOW-DOOR SOBINCO VAR. A
AUSFRAESUNG 5-F VER. FENSTERTUER SOBINCO VAR. A

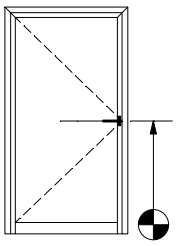

Referentiemaat
Dimension de référence
Reference dimension
Referenzmass

5	061.7456.ZC
	en - et - and - und 061.7704.-- (inox + zamac)
	en - et - and - und 2 x 061.7699.-- (inox + zamac)

	095.A700.00		095.A731.00
of - ou - or - oder			
	095.B300.00		095.B320.00

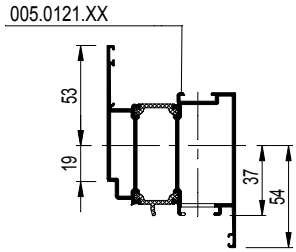

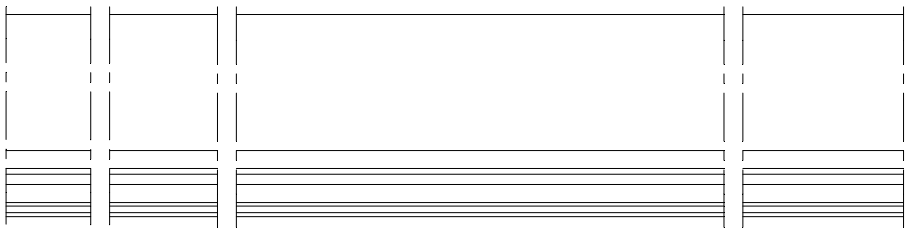

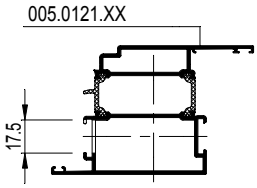

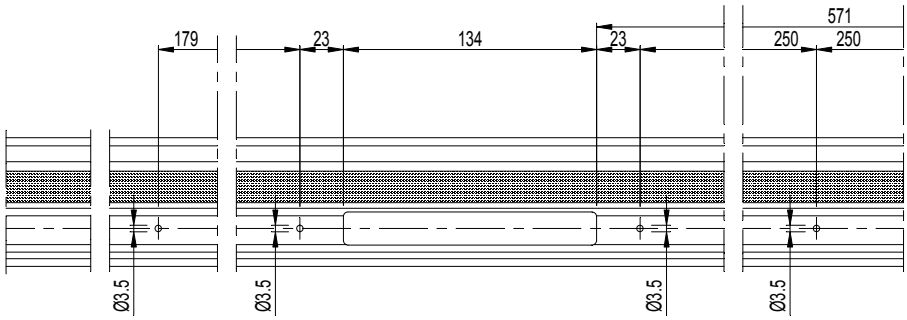

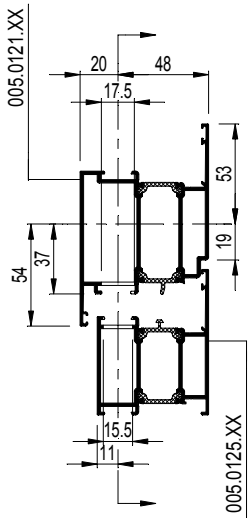

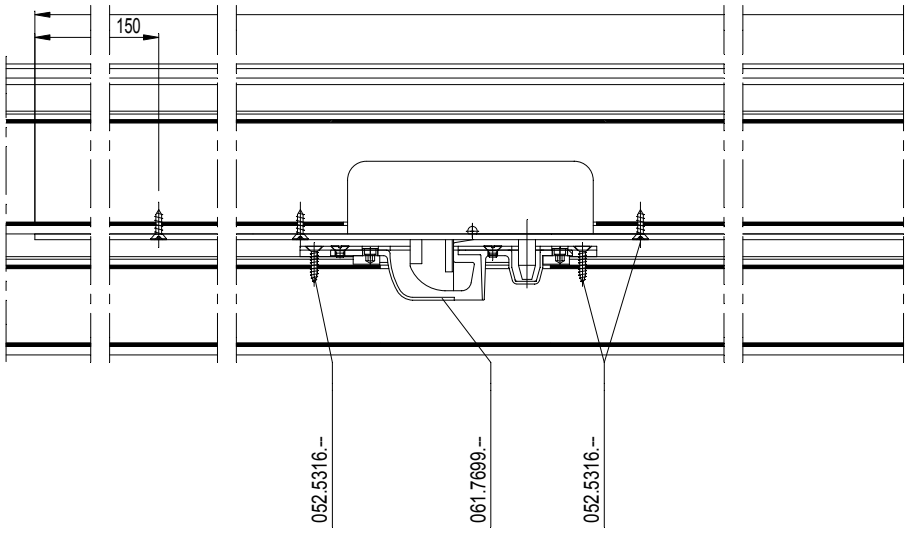

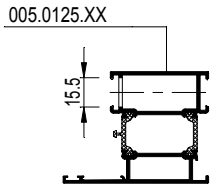

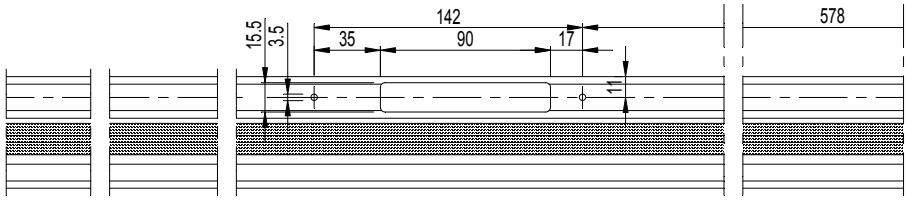

D0081847

F

UITFREZING 5-PUNTSLOT RAAMDEUR SOBINCO VAR. A
FRAISAGE FERM. A 5 P PORTE-FENETRE SOBINCO VAR. A
MILLING 5 POINT LOCK WINDOW-DOOR SOBINCO VAR. A
AUSFRAESUNG 5-F VER. FENSTERTUER SOBINCO VAR. A

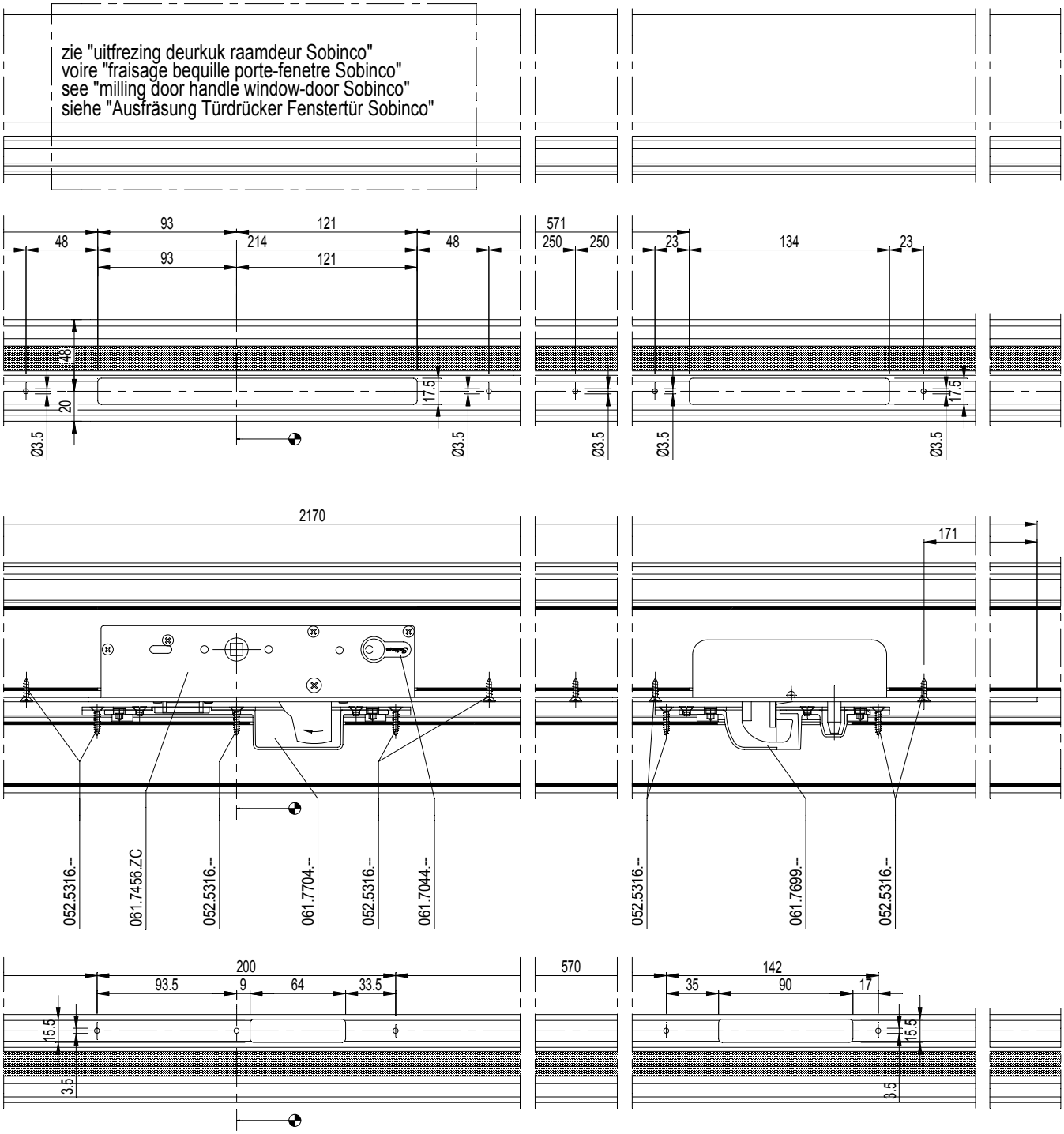

F

D0081847

CS 68-FP
EW 30

UITFREZING 5-PUNTSLOT RAAMDEUR SOBINCO VAR. D
FRAISAGE FERM. A 5 P PORTE-FENETRE SOBINCO VAR. D
MILLING 5 POINT LOCK WINDOW-DOOR SOBINCO VAR. D
AUSFRAESUNG 5-F VER. FENSTERTUER SOBINCO VAR. D

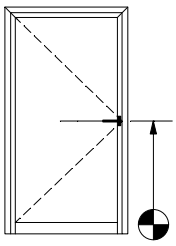

Referentiemaat
Dimension de référence
Reference dimension
Referenzmass

5	061.7456.ZC
	en - et - and - und 061.7705.-- (inox + zamac)

	095.A700.00		095.A731.00
	of - ou - or - oder		
	095.B300.00		095.B320.00

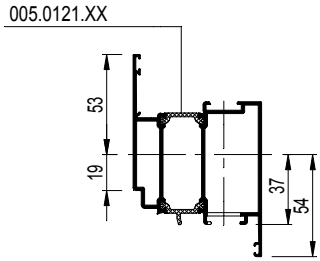

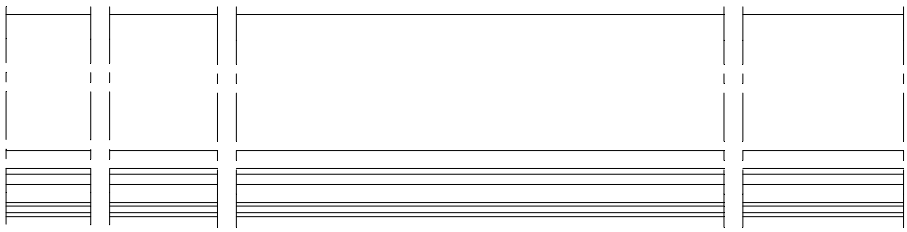

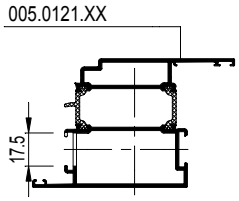

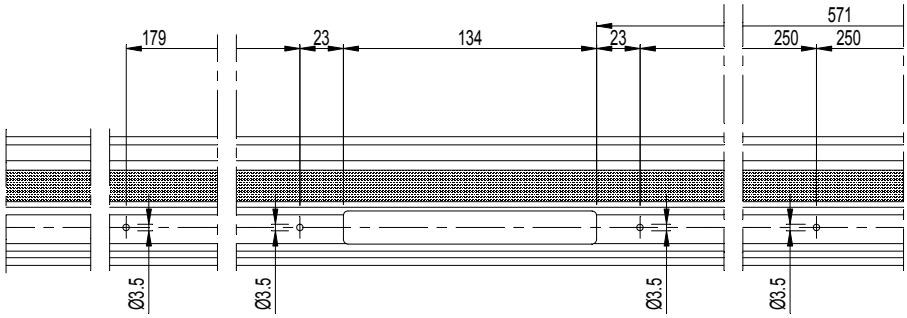

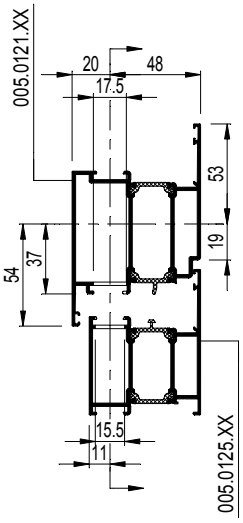

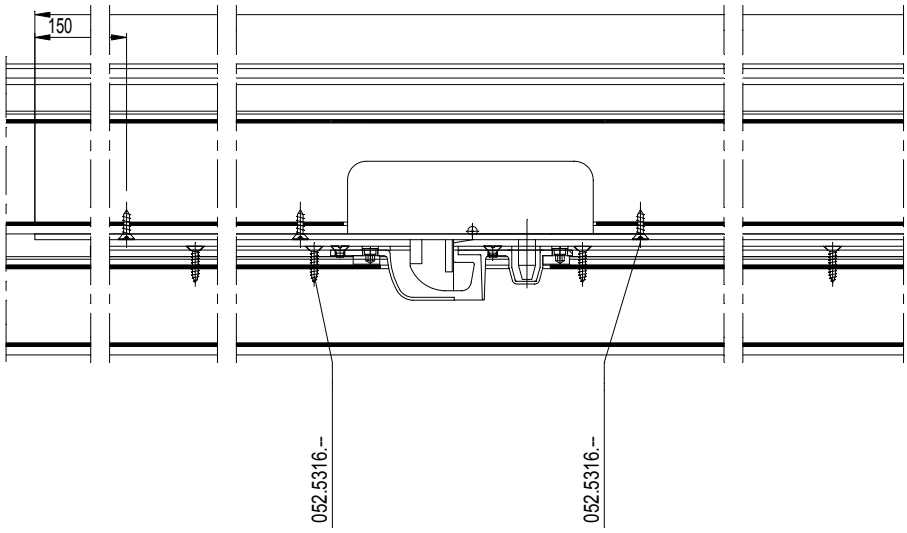

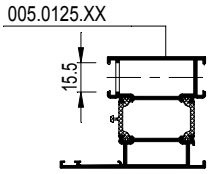

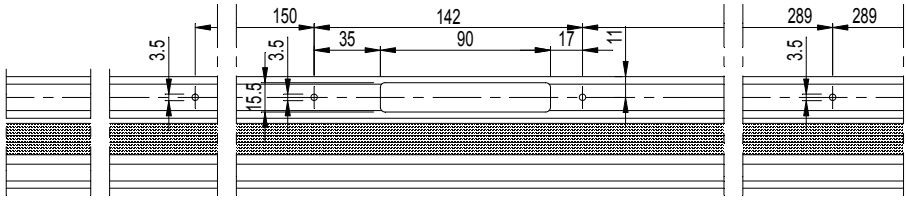

D0081850

F

UITFREZING 5-PUNTSLOT RAAMDEUR SOBINCO VAR. D
FRAISAGE FERM. A 5 P PORTE-FENETRE SOBINCO VAR. D
MILLING 5 POINT LOCK WINDOW-DOOR SOBINCO VAR. D
AUSFRAESUNG 5-F VER. FENSTERTUER SOBINCO VAR. D

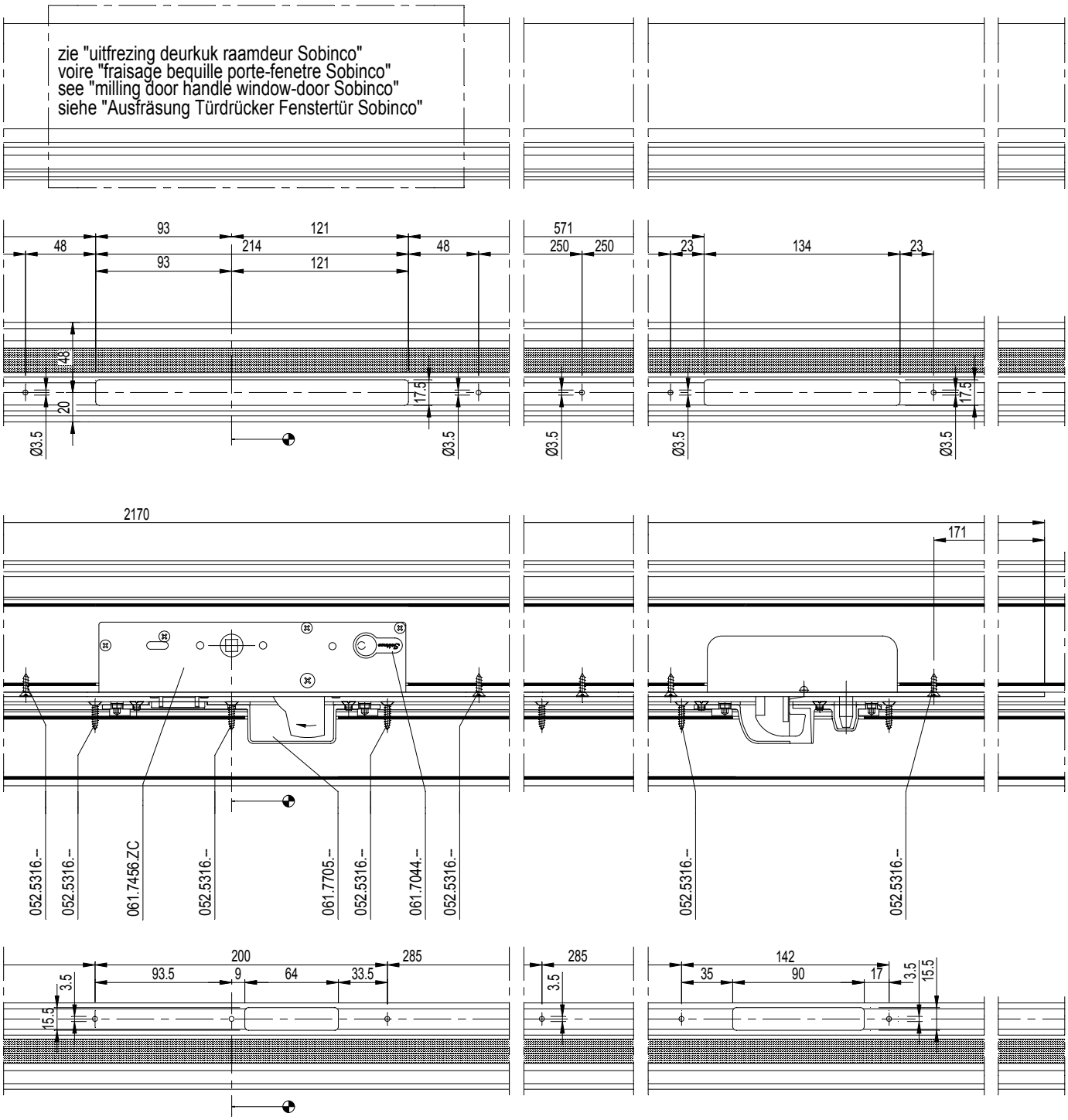

F

D0081850

CS 68-FP
EW 30

UITFREZING 5-PUNTSLOT RAAMDEUR SOBINCO VAR. E
FRAISAGE FERM. A 5 P PORTE-FENETRE SOBINCO VAR. E
MILLING 5 POINT LOCK WINDOW-DOOR SOBINCO VAR. E
AUSFRAESUNG 5-F VER. FENSTERTUER SOBINCO VAR. E

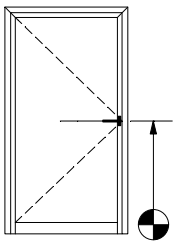

Referentiemaat
Dimension de référence
Reference dimension
Referenzmass

5	061.7456.ZC
	en - et - and - und
	061.7704.--
	en - et - and - und
	2 x 061.7699.--

	095.A700.00		095.A731.00
	of - ou - or - oder		
	095.B300.00		095.B320.00

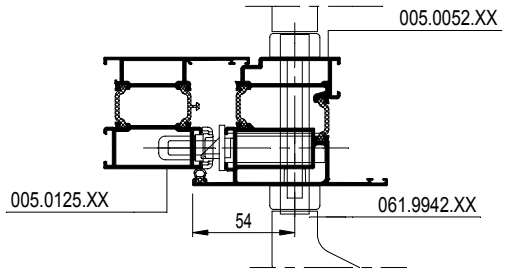

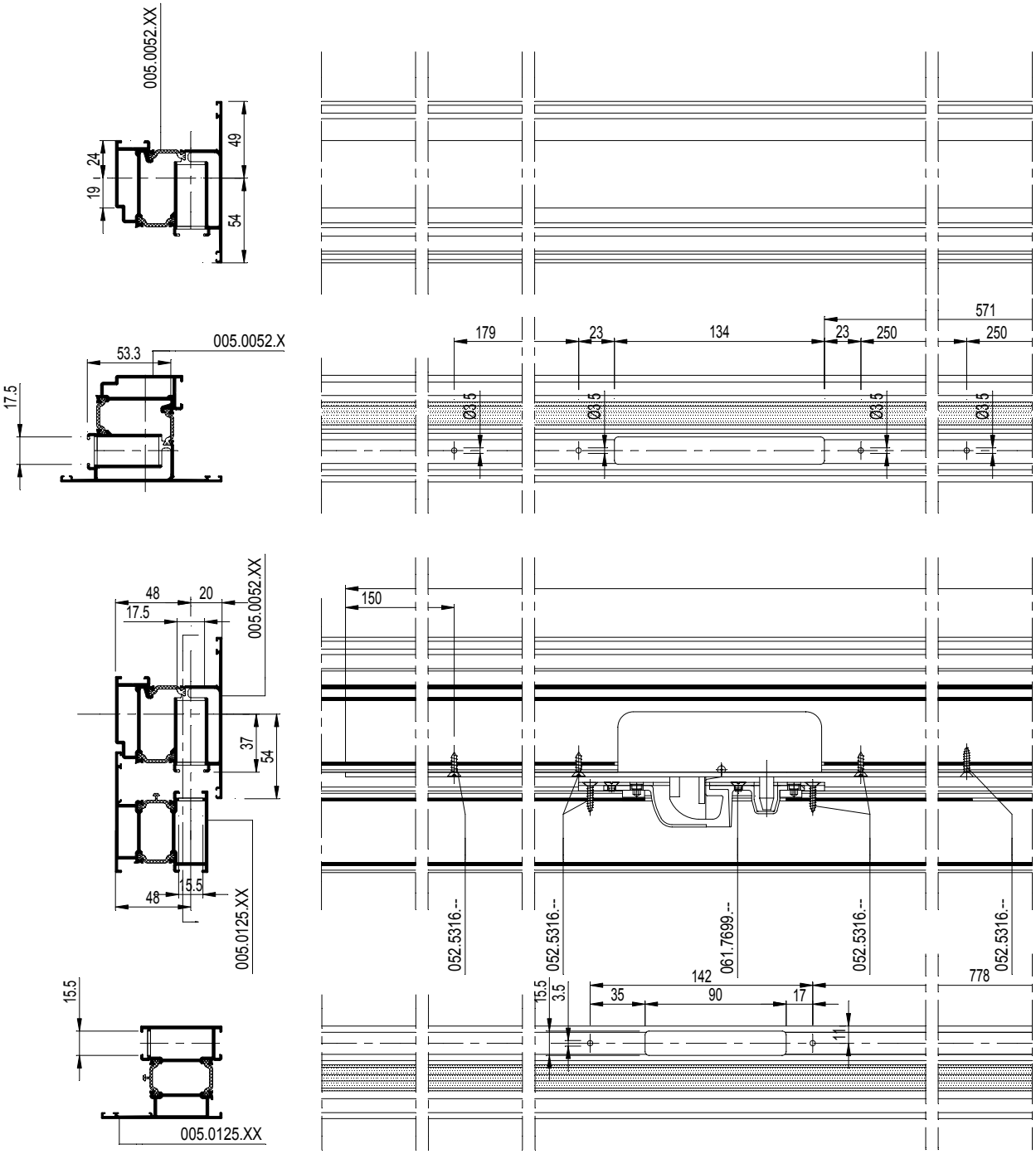

D0081852

UITFREZING 5-PUNTSLOT RAAMDEUR SOBINCO VAR. E
FRAISAGE FERM. A 5 P PORTE-FENETRE SOBINCO VAR. E
MILLING 5 POINT LOCK WINDOW-DOOR SOBINCO VAR. E
AUSFRAESUNG 5-F VER. FENSTERTUER SOBINCO VAR. E

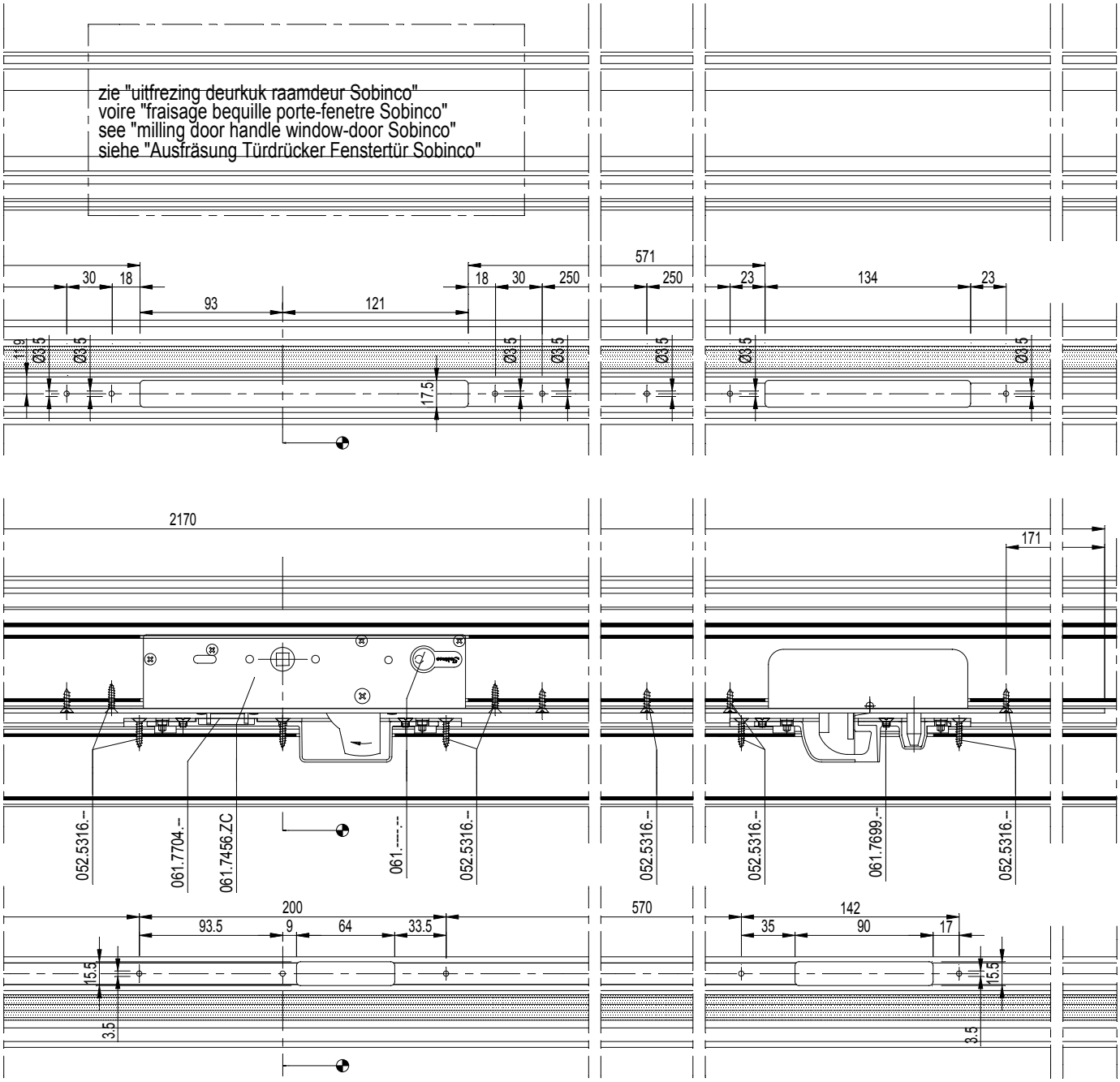

D0081852

F

UITFREZING 5-PUNTSLOT LANG SOBINCO
FRAISAGE FERMETURE A 5 POINTS LONG SOBINCO
MILLING 5 POINT LOCK LONG SOBINCO
AUSFRAESUNG 5-FACHVERRIEGELUNG LANG SOBINCO

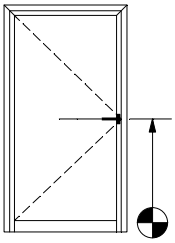

Referentiemaat
Dimension de référence
Referenzmass
Reference dimension

5	061.7354.ZC
	en - et - and - und 061.7704.-- (inox + zamac)
	en - et - and - und 2 x 061.7699.-- (inox + zamac)

	095.A700.00		095.A731.00* en - et - and - und 095.A746.00**
of - ou - oder - or			
	095.B300.00		095.B320.00* en - et - and - und 095.B331.00**

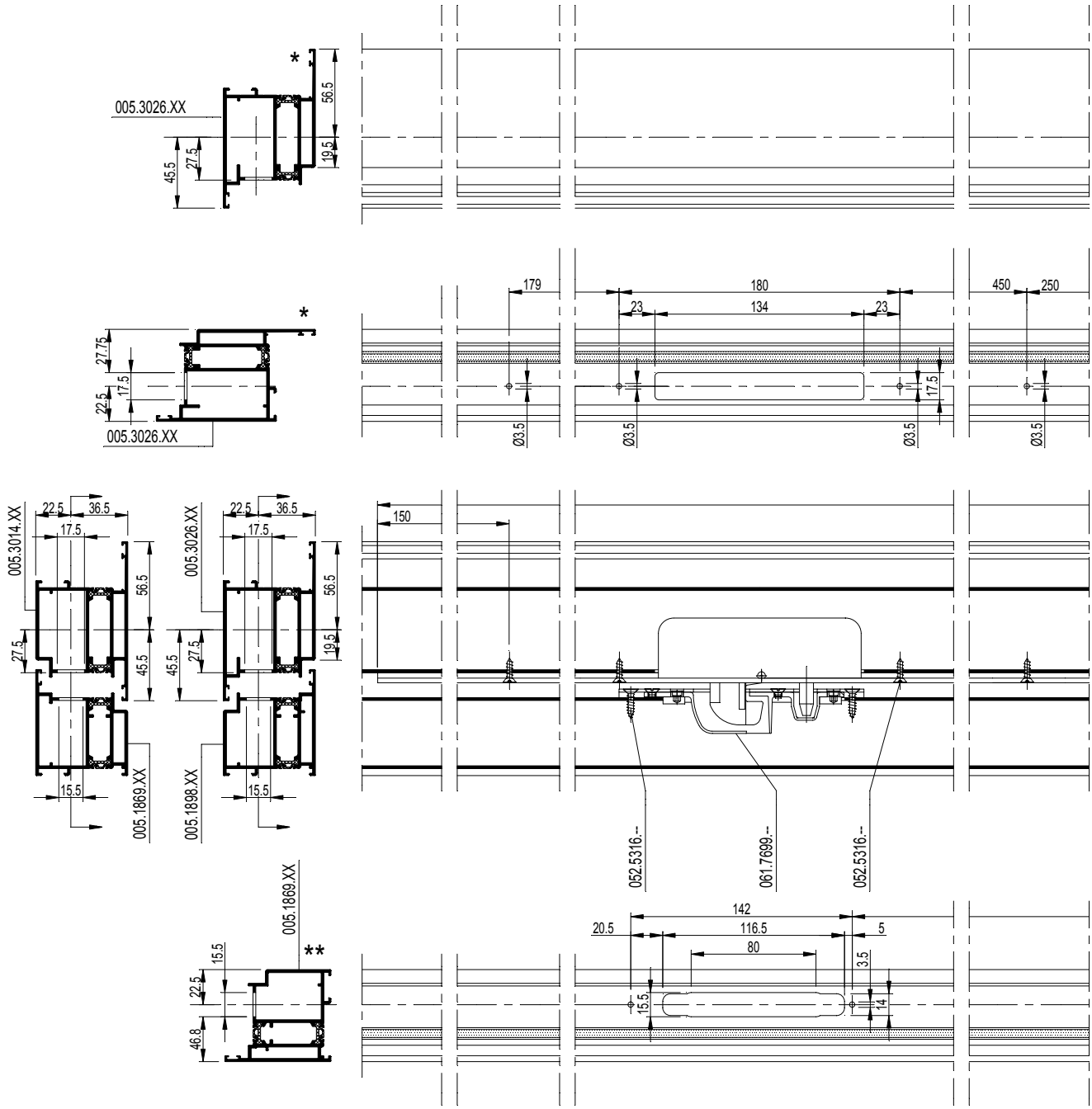

D0081864

F

UITFREZING 5-PUNTSLOT LANG SOBINCO
FRAISAGE FERMETURE A 5 POINTS LONG SOBINCO
MILLING 5 POINT LOCK LONG SOBINCO
AUSFRAESUNG 5-FACHVERRIEGELUNG LANG SOBINCO

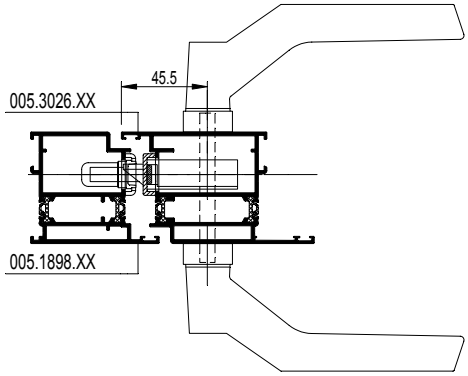

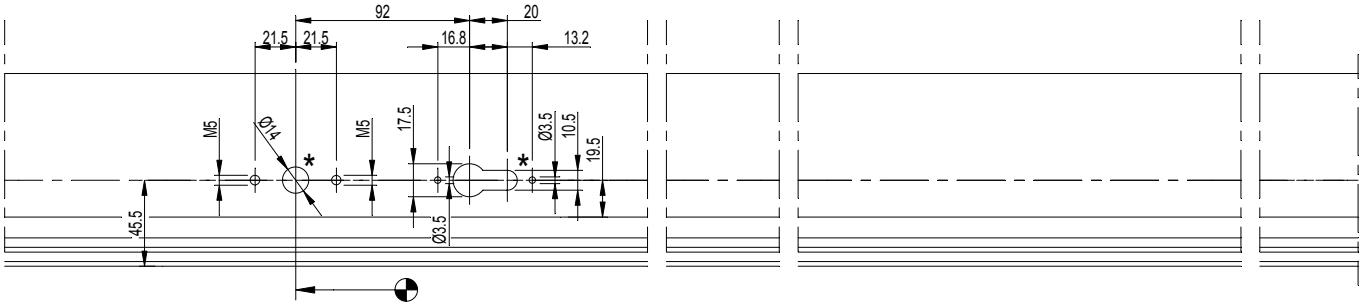

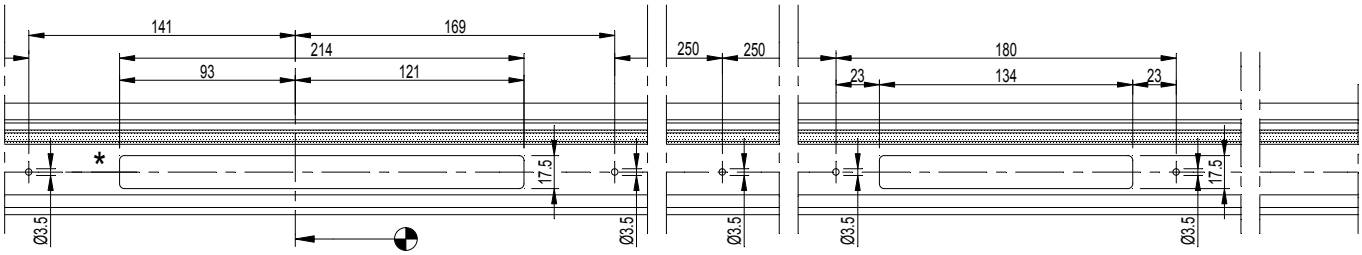

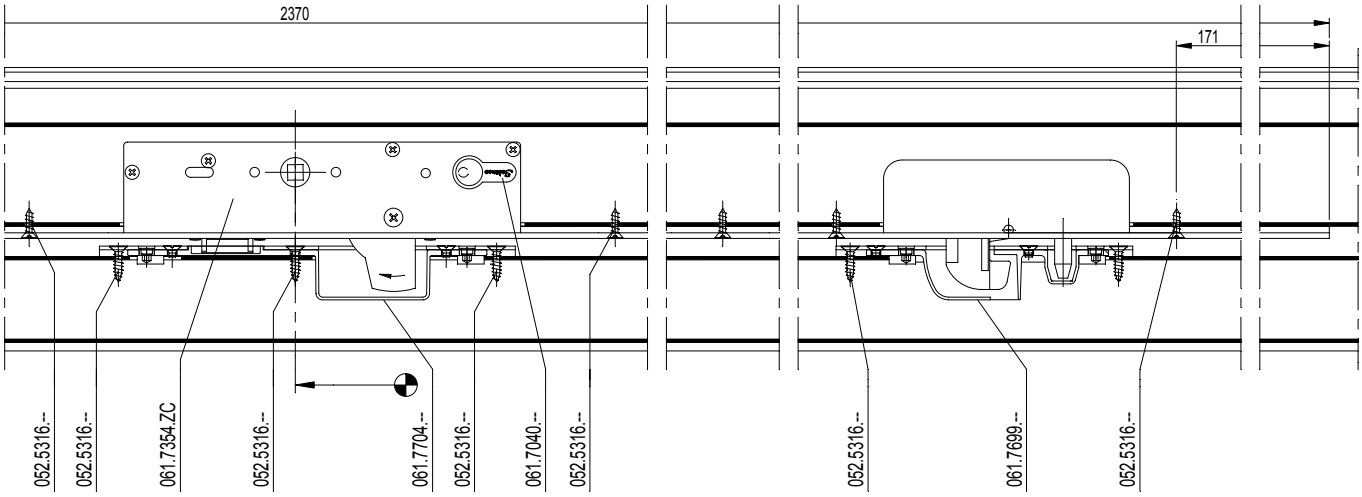

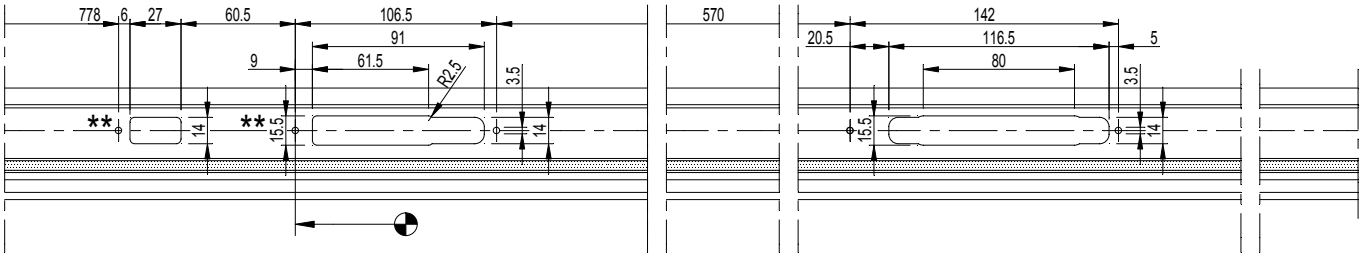

D0081864

F

UITFREZING 5-PUNTSLOT LANG SOBINCO VAR. A
FRAISAGE FERMETURE A 5 POINTS LONG SOBINCO VAR. A
MILLING 5 POINT LOCK LONG SOBINCO VAR. A
AUSFRAESUNG 5-FACHVERRIEGELUNG LANG SOBINCO VAR. A

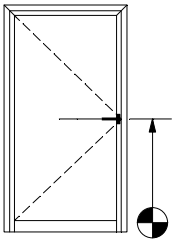

Referentiemaat
Dimension de référence
Referenzmass
Reference dimension

5	061.7354.ZC
	en - et - and - und
	061.7706.-- (inox + zamac)

	095.A700.00		095.A731.00* en - et - and - und 095.A746.00**
	of - ou - oder - or		
	095.B300.00		095.B320.00* en - et - and - und 095.B331.00**

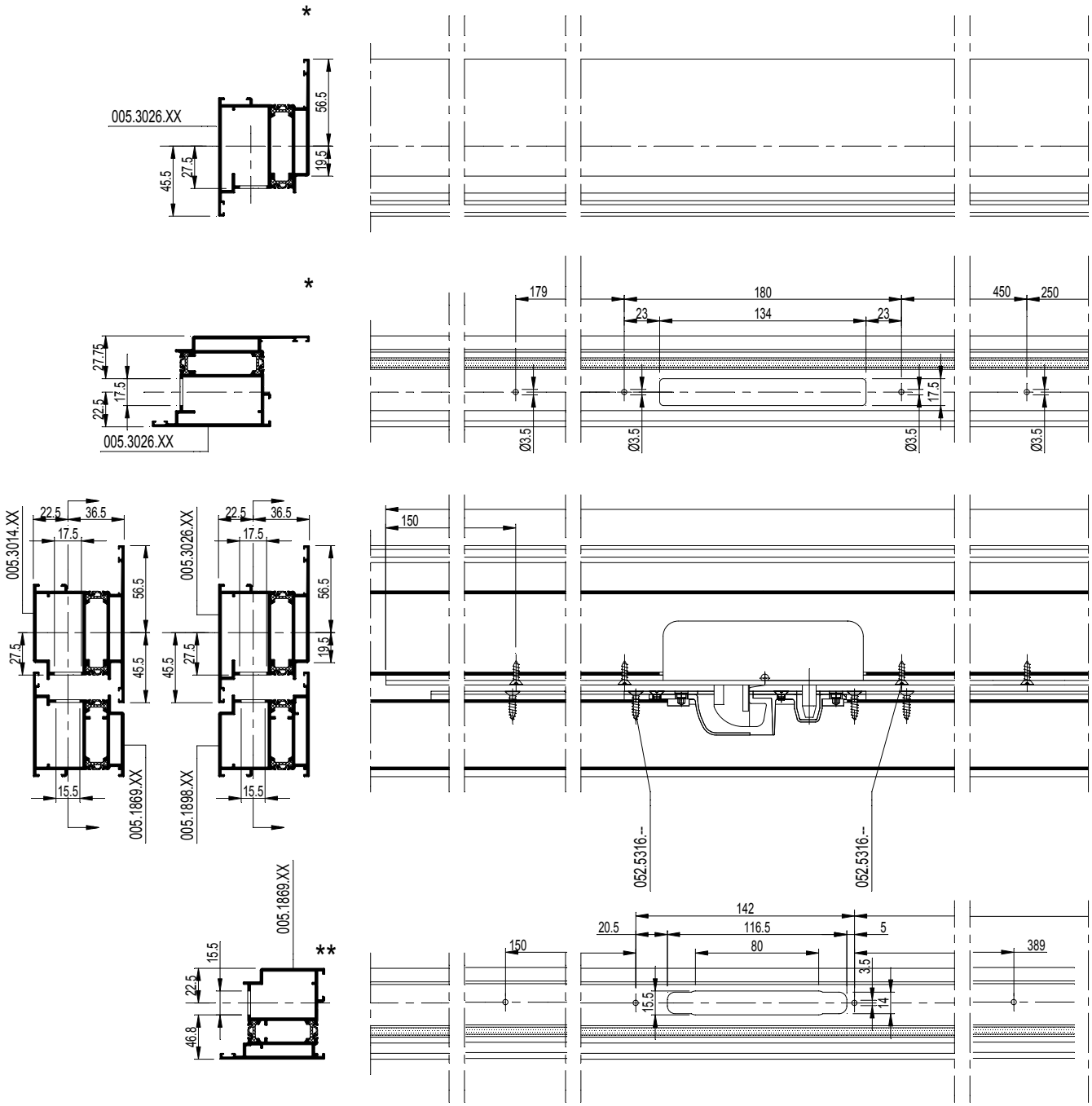

D0081865

F

CS 68-FP
EW 30

UITFREZING 5-PUNTSLOT LANG RAAMDEUR SOB. VAR. A
FRAISAGE FERM. A 5 PNTS LONG PORTE-FEN. SOB. VAR. A
MILLING 5 POINT LOCK LONG WINDOW-DOOR SOB. VAR. A
AUSFRAESUNG 5-FACHVERR. LANG FENSTERTUER SOB. VAR. A

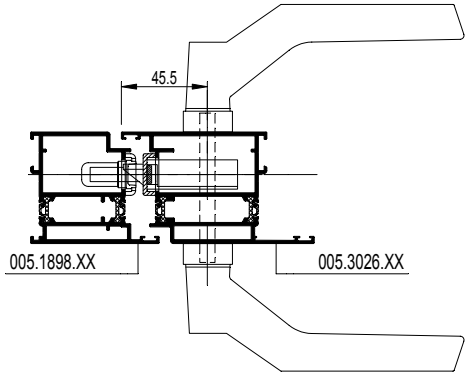

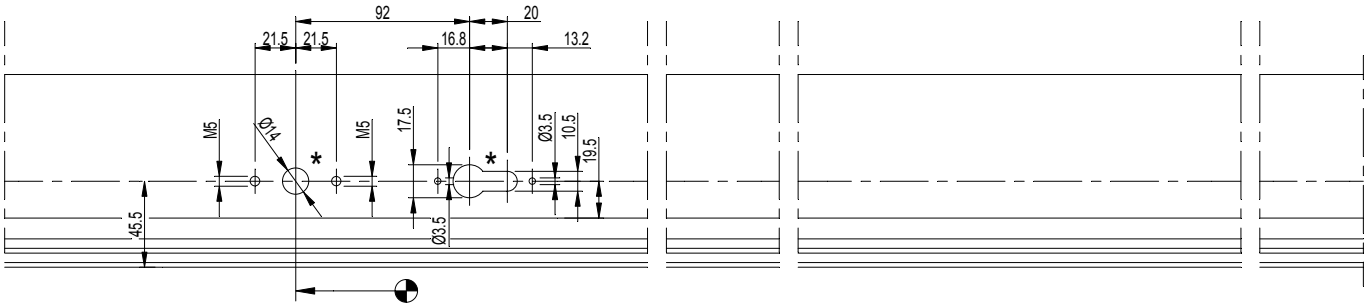

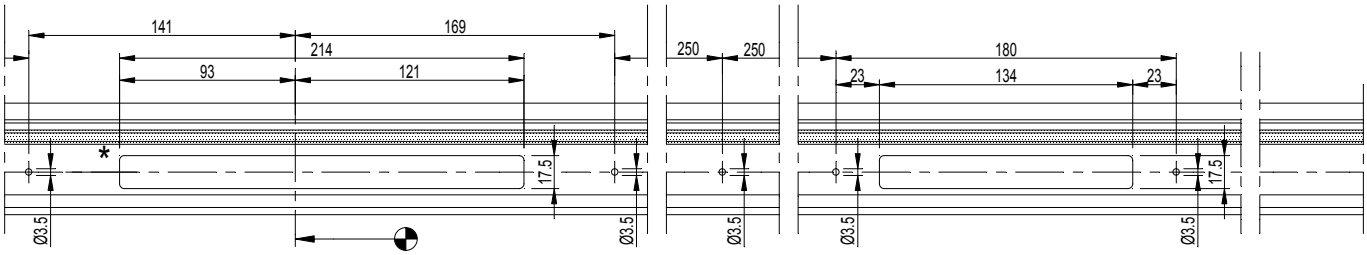

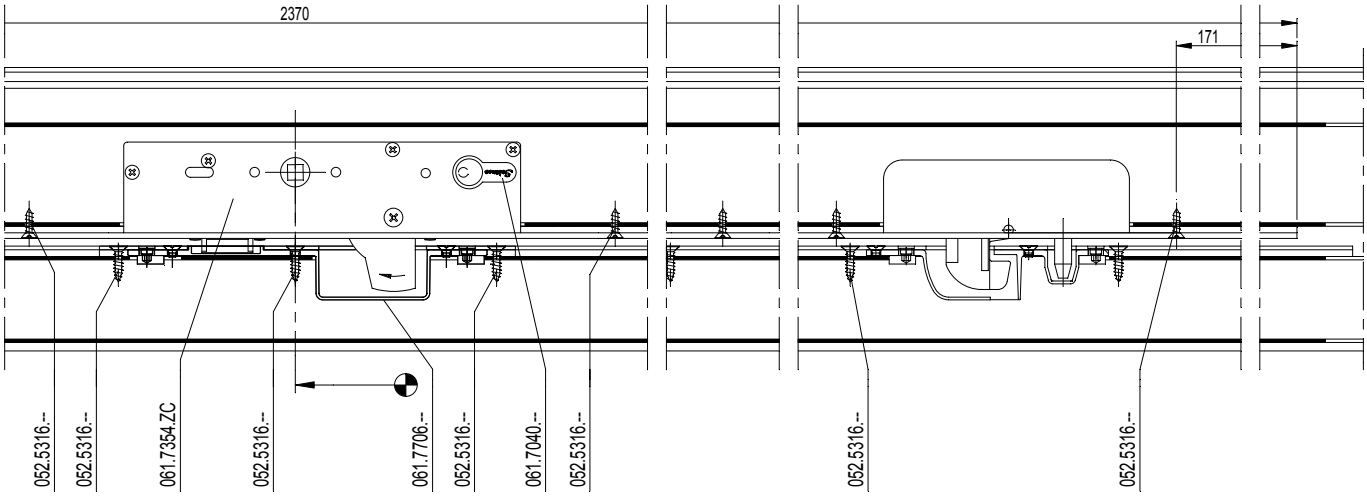

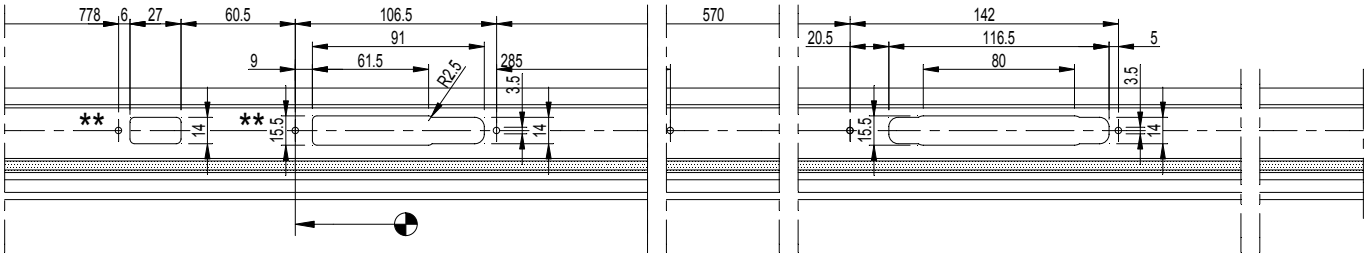

F

D0081865

CS 68-FP
EW 30

UITFREZING 5-PUNTSLOT LANG RAAMDEUR SOB. VAR. A
FRAISAGE FERM. A 5 PNTS LONG PORTE-FEN. SOB. VAR. A
MILLING 5 POINT LOCK LONG WINDOW-DOOR SOB. VAR. A
AUSFRAESUNG 5-FACHVERR. LANG FENSTERTUER SOB. VAR. A

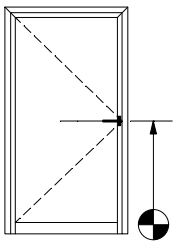

Referentiemaat
Dimension de référence
Reference dimension
Referenzmass

5	061.7356.ZC
	en - et - and - und 061.7703.-- (inox)
	en - et - and - und 2 X 061.7698.-- (inox)

	095.A700.00		095.A731.00
of - ou - or - oder			
	095.B300.00		095.B320.00

005.0121.XX

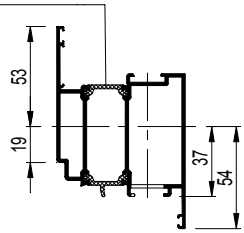

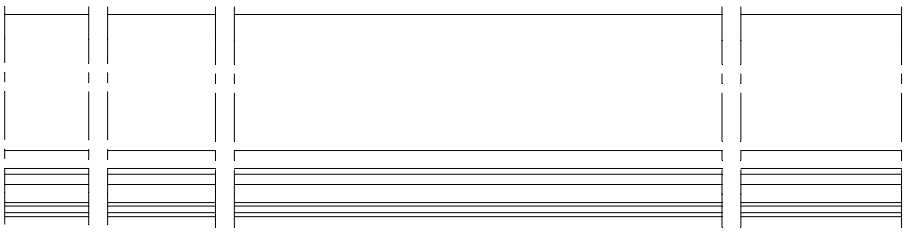

005.0121.XX

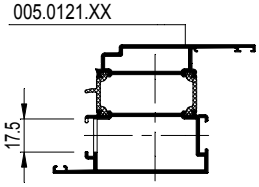

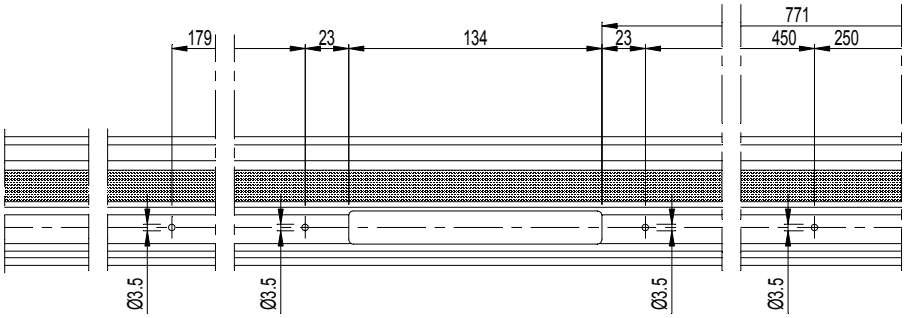

005.0121.XX

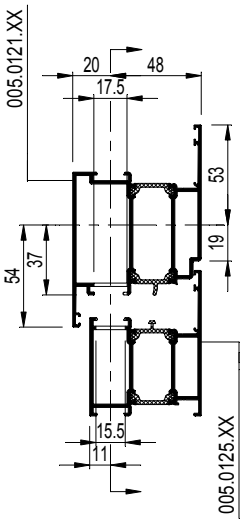

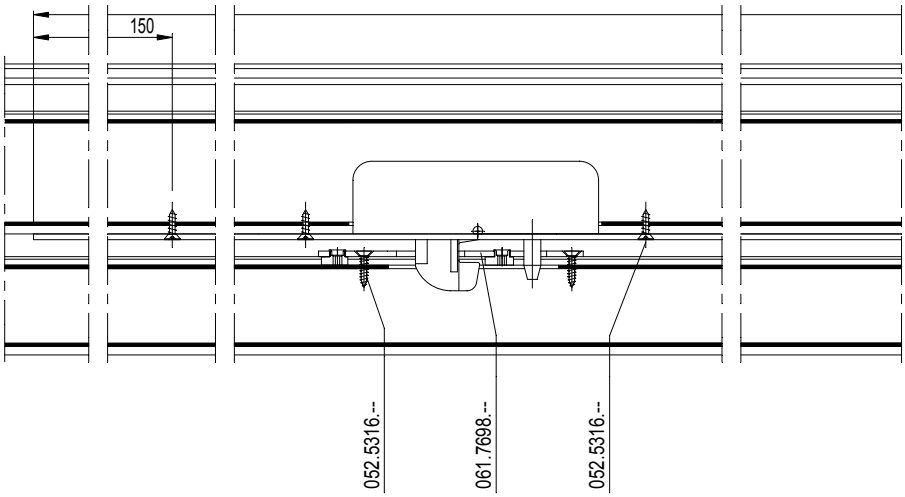

005.0125.XX

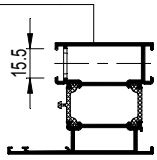

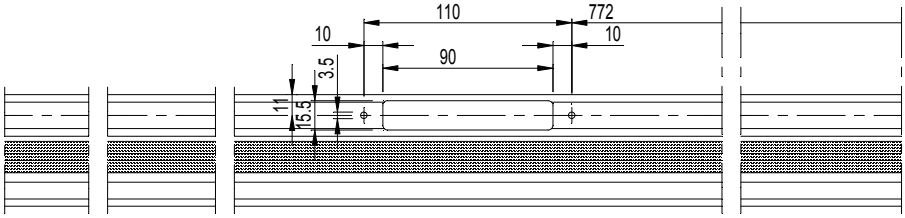

D0081853

F

UITFREZING 5-PUNTSLOT LANG RAAMDEUR SOB. VAR. A
FRAISAGE FERM. A 5 PNTS LONG PORTE-FEN. SOB. VAR. A
MILLING 5 POINT LOCK LONG WINDOW-DOOR SOB. VAR. A
AUSFRAESUNG 5-FACHVERR. LANG FENSTERTUER SOB. VAR. A

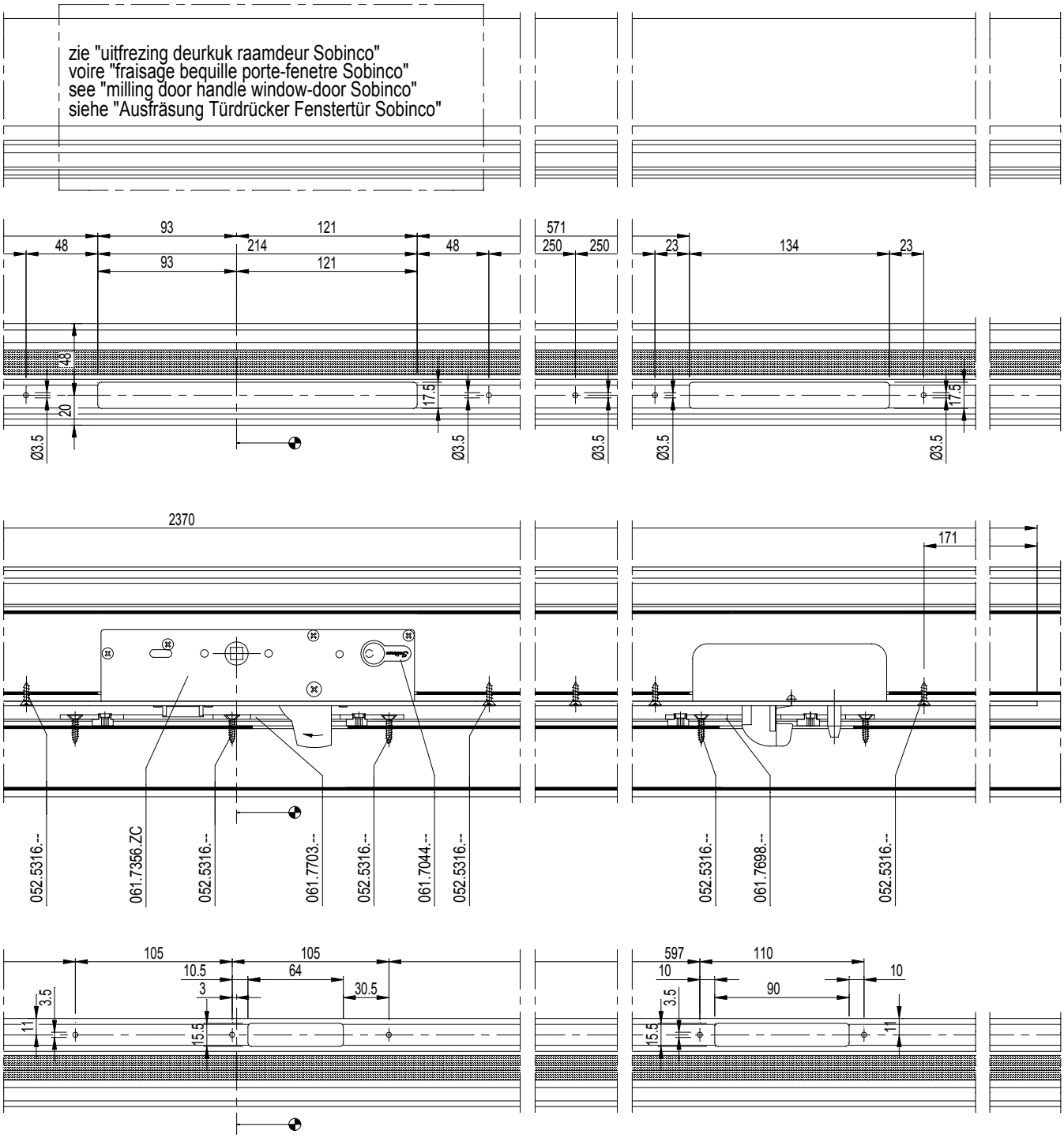

F

D0081853

UITFREZING 5-PUNTSLOT LANG RAAMDEUR SOB. VAR. B
FRAISAGE FERM. A 5 PNTS LONG PORTE-FEN. SOB. VAR. B
MILLING 5 POINT LOCK LONG WINDOW-DOOR SOB. VAR. B
AUSFRAESUNG 5-FACHVERR. LANG FENSTERTUER SOB. VAR. B

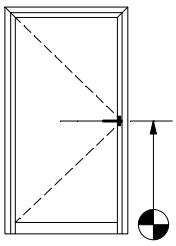

Referentiemaat
Dimension de référence
Reference dimension
Referenzmass

5	061.7356.ZC
	en - et - and - und 061.7704.-- (inox + zamac)
	en - et - and - und 2 X 061.7699.-- (inox + zamac)

	095.A700.00		095.A731.00
of - ou - or - oder			
	095.B300.00		095.B320.00

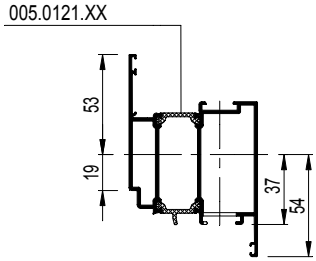

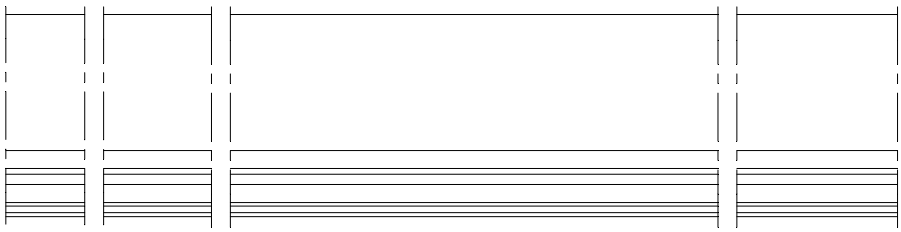

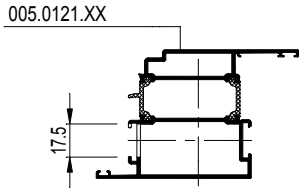

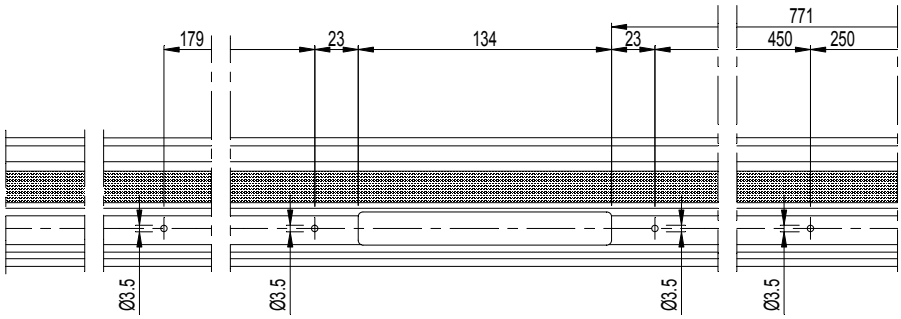

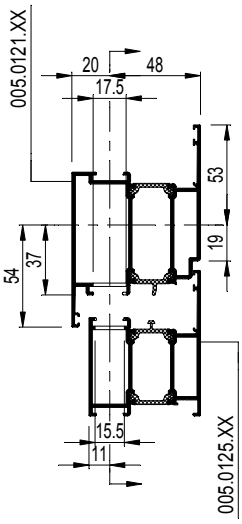

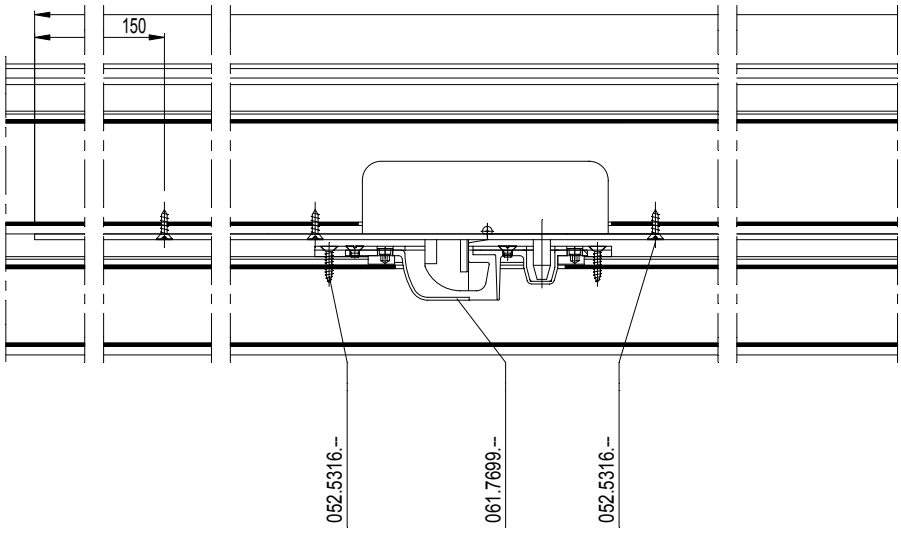

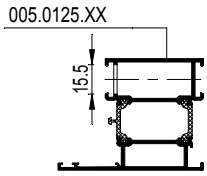

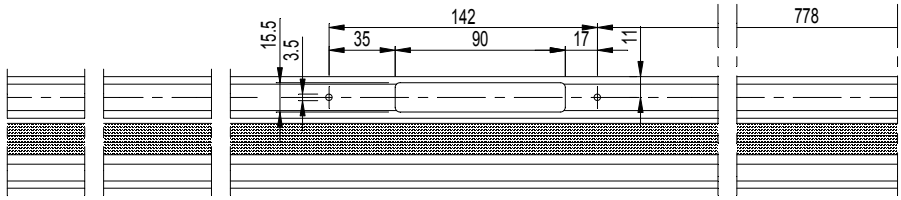

D0081854

F

UITFREZING 5-PUNTSLOT LANG RAAMDEUR SOB. VAR. B
FRAISAGE FERM. A 5 PNTS LONG PORTE-FEN. SOB. VAR. B
MILLING 5 POINT LOCK LONG WINDOW-DOOR SOB. VAR. B
AUSFRAESUNG 5-FACHVERR. LANG FENSTERTUER SOB. VAR. B

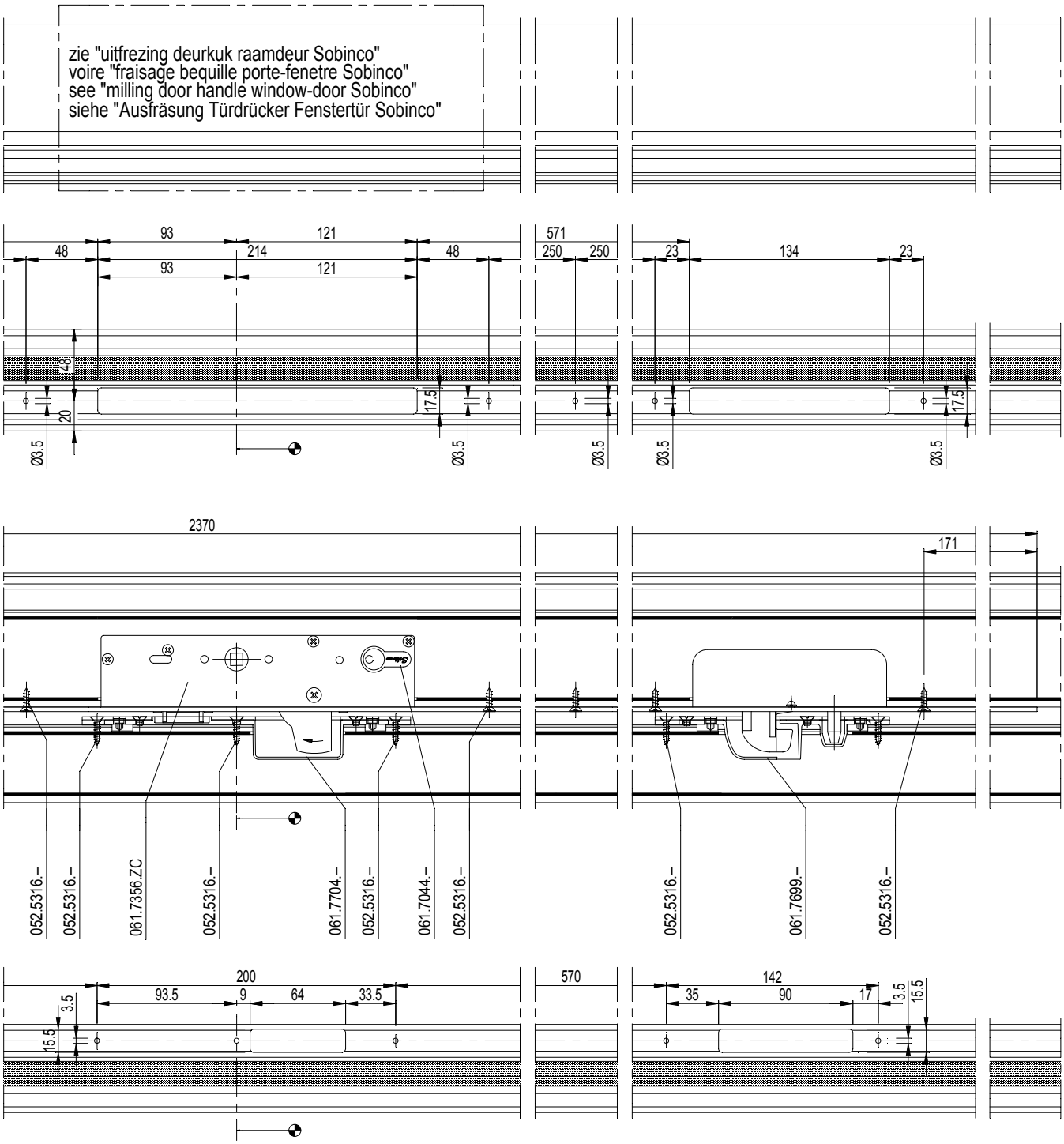

F

D0081854

CS 68-FP
EW 30

UITFREZING 5-PUNTSLOT LANG RAAMDEUR SOB. VAR. D
FRAISAGE FERM. A 5 PNTS LONG PORTE-FEN. SOB. VAR. D
MILLING 5 POINT LOCK LONG WINDOW-DOOR SOB. VAR. D
AUSFRAESUNG 5-FACHVERR. LANG FENSTERTUER SOB. VAR. D

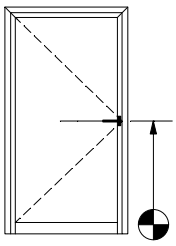

Referentiemaat
Dimension de référence
Reference dimension
Referenzmass

5	061.7356.ZC
	en - et - and - und 061.7706.-- (inox + zamac)

	095.A700.00		095.A731.00
	of - ou - or - oder		
	095.B300.00		095.B320.00

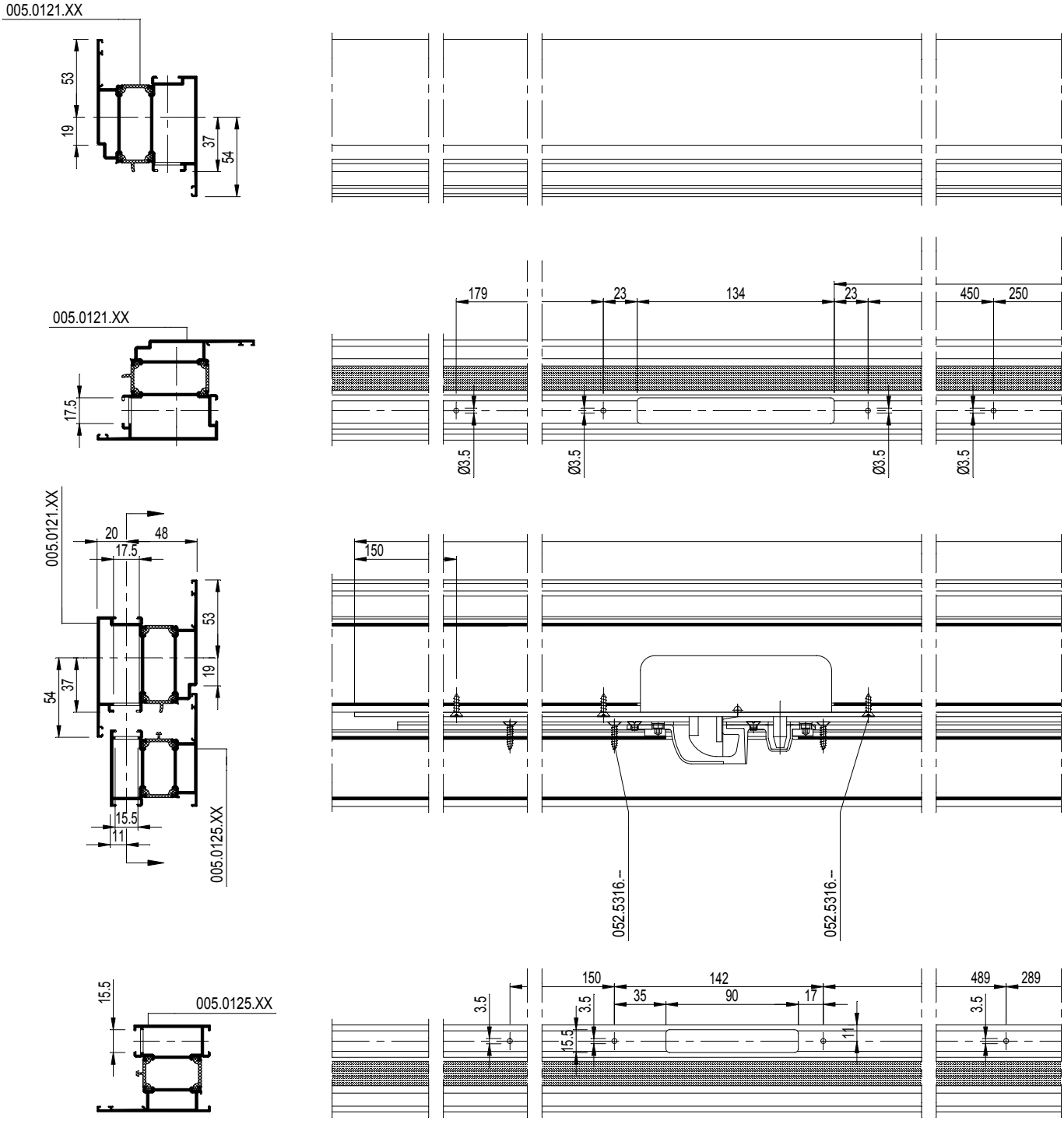

F

D0081856

UITFREZING 5-PUNTSLOT LANG RAAMDEUR SOB. VAR. D
FRAISAGE FERM. A 5 PNTS LONG PORTE-FEN. SOB. VAR. D
MILLING 5 POINT LOCK LONG WINDOW-DOOR SOB. VAR. D
AUSFRAESUNG 5-FACHVERR. LANG FENSTERTUER SOB. VAR. D

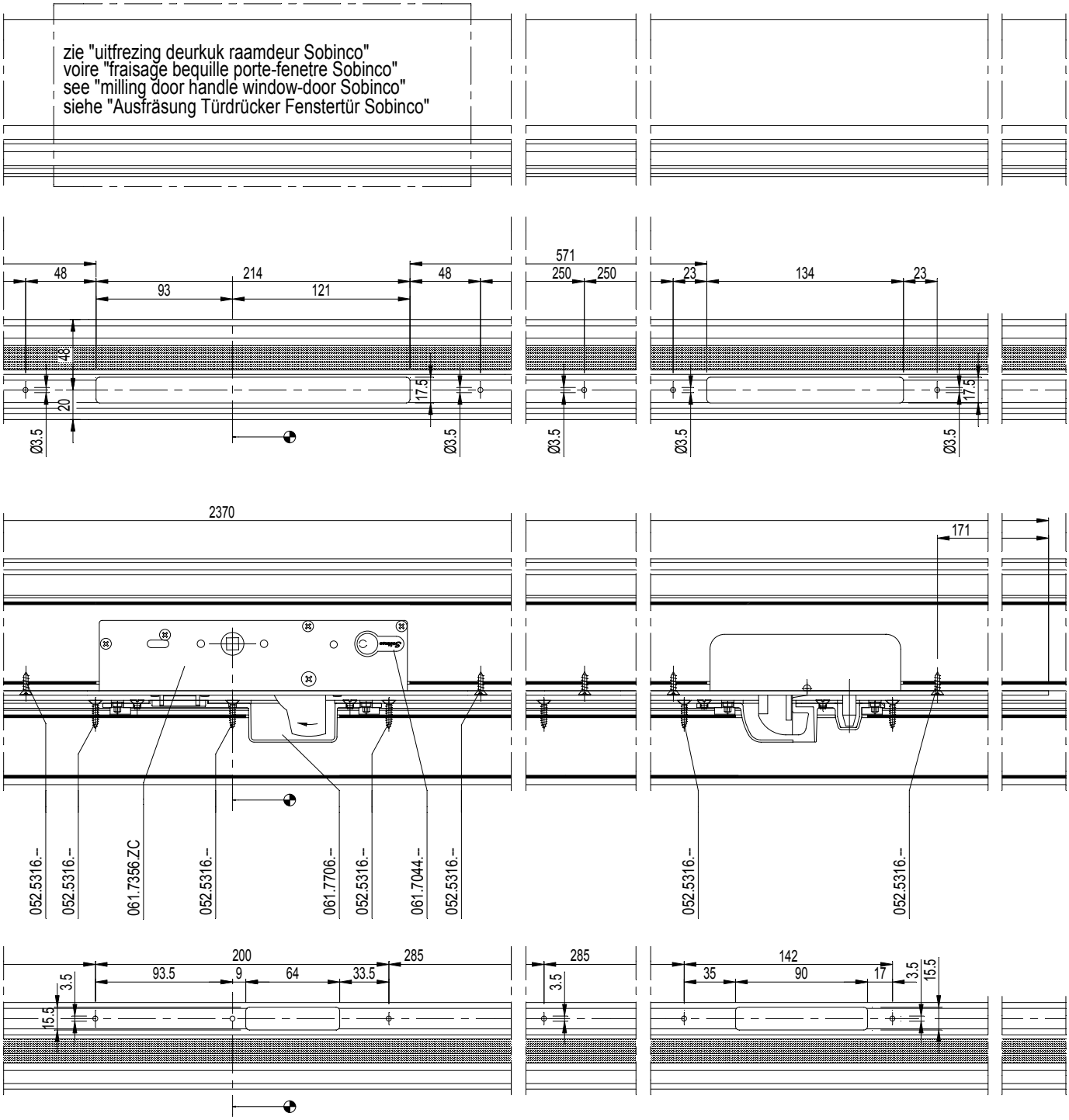

D0081856

F

CS 68-FP
EW 30

UITFREZING 5-PUNTSLOT LANG RAAMDEUR SOBINCO VAR. E
FRAISAGE FERM. A 5 PNTS LONG PORTE-FEN. SOB. VAR. E
MILLING 5 POINT LOCK LONG WINDOW-DOOR SOBINCO VAR. E
AUSFRAESUNG 5-FACHVERR. LANG FENSTERTUER SOB. VAR. E

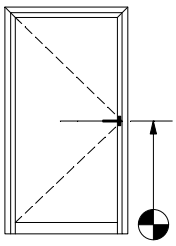

Referentiemaat
Dimension de référence
Reference dimension
Referenzmass

5	061.7356.ZC
	en - et - and - und
	061.7704.--
	en - et - and - und
	2 x 061.7699.--

	095.A700.00		095.A731.00
	of - ou - or - oder		
	095.B300.00		095.B320.00

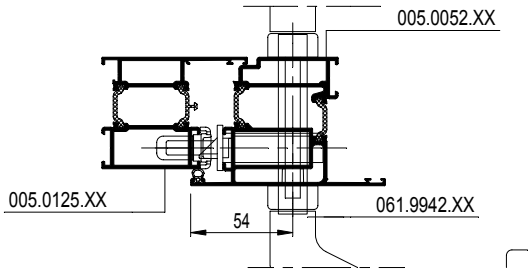

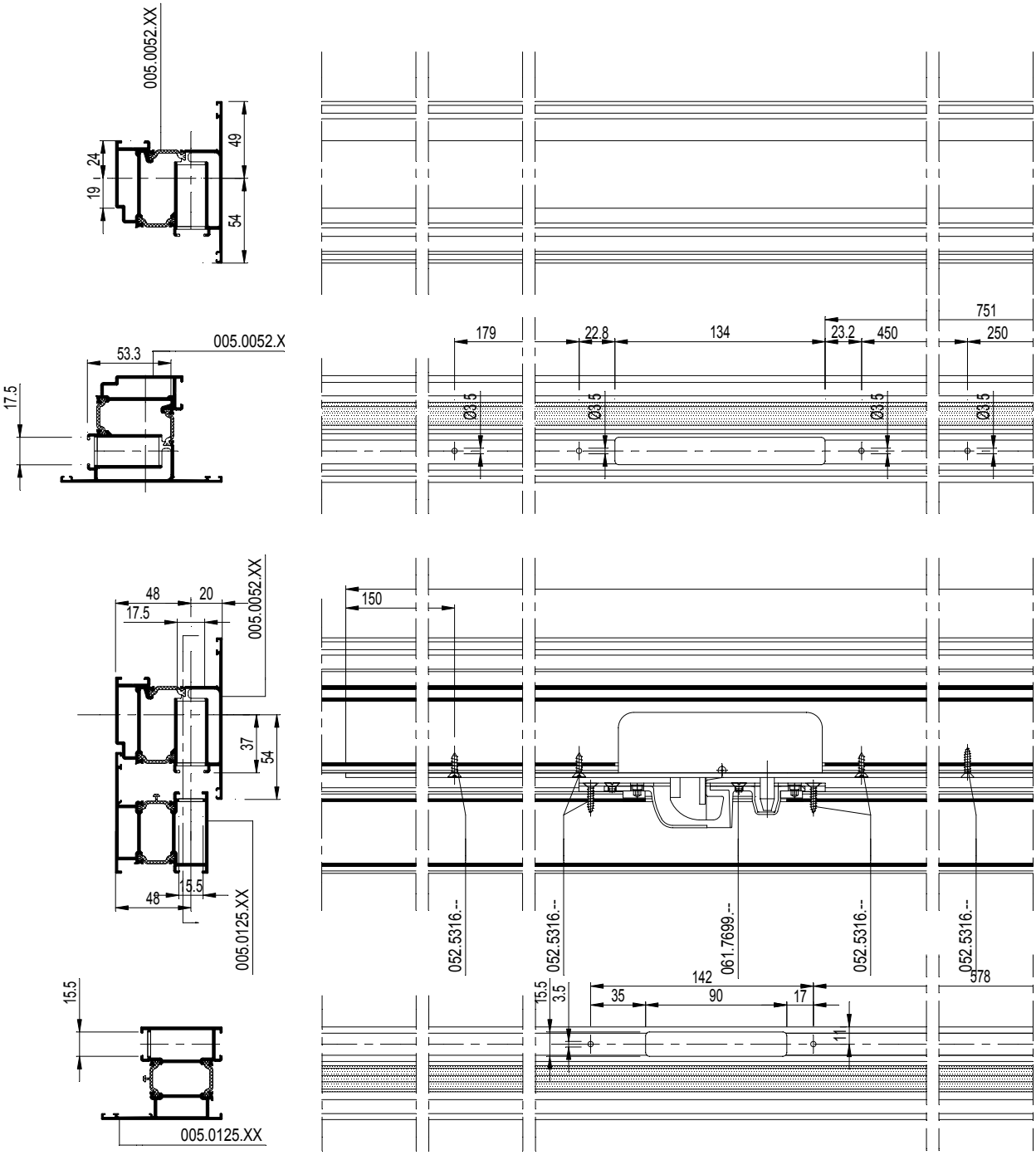

D0081857

F

UITFREZING 5-PUNTSLOT LANG RAAMDEUR SOBINCO VAR. E
FRAISAGE FERM. A 5 PNTS LONG PORTE-FEN. SOB. VAR. E
MILLING 5 POINT LOCK LONG WINDOW-DOOR SOBINCO VAR. E
AUSFRAESUNG 5-FACHVERR. LANG FENSTERTUER SOB. VAR. E

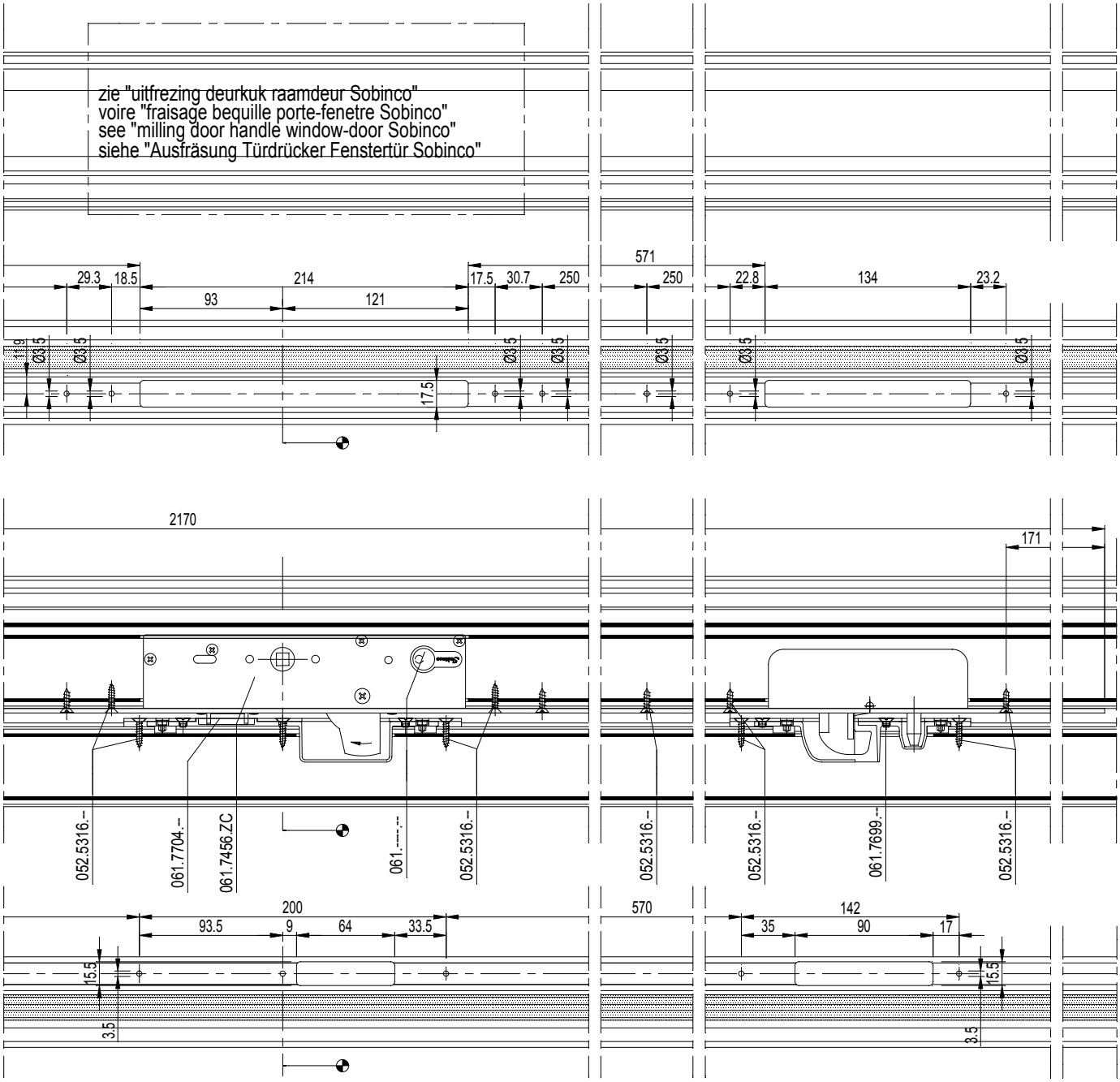

F

D0081857

OVERZICHT SLOTEN DEUREN WILKA
APERCU SERRURES PORTES WILKA
OVERVIEW LOCKS DOORS WILKA
UEBERSICHT SCHLOESSER TUREN WILKA

WILKA 150Pa (DIN R) 150Pa (DIN R)	3 061.7303.-- *	061.7726.-- 061.7723.-- DIN R 061.7769.-- DIN R 2x 061.7720.--
150Pa (DIN L)	3 061.7302.-- *	061.7726.-- 061.7725.-- DIN L 061.7772.-- DINL 2x 061.7720.--

* Altijd in combinatie met 2 stuks 061.6455.--

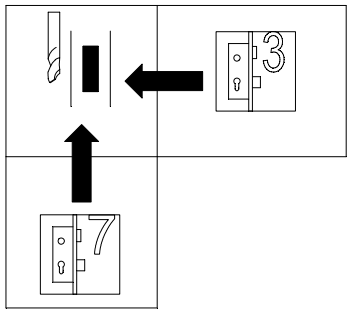

F

D0081858

Voor toepassing Fuhr meerpuntssloten zie opening doors AD.089.H15A.00

Voor toepassing Fuhr espagnoletssloten zie CS68

Voor toepassing CS68-AP sloten zie CS68-AP AD.089.G12C.00

UITFREZING 3-PUNTSLOT WILKA 150Pa
FRAISAGE FERMETURE A 3 POINTS WILKA 150Pa
MILLING 3-POINT LOCK WILKA 150Pa
AUSFRAESUNG 3-FACHVERRIEGELUNG WILKA 150Pa

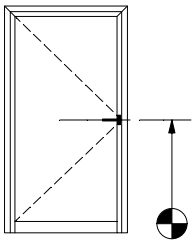

Referentiemaat
Dimension de référence
Reference dimension
Referenzmass

WILKA	3 061.7303.ZC (DIN R)		061.7769.-- (DIN R)
PZ LOCKS		2x	061.7720.--
			061.7723.-- (DIN R)
			061.7726.--

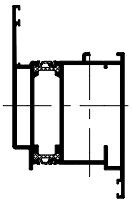

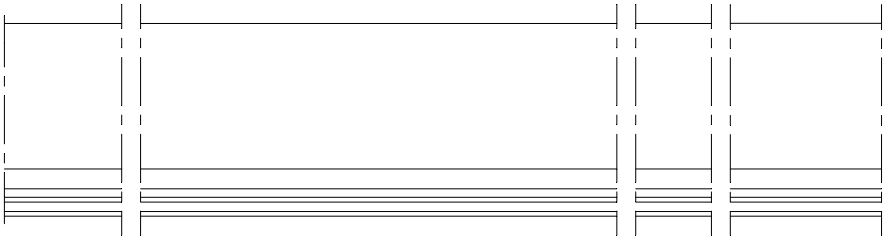

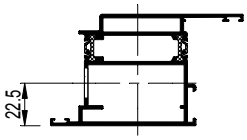

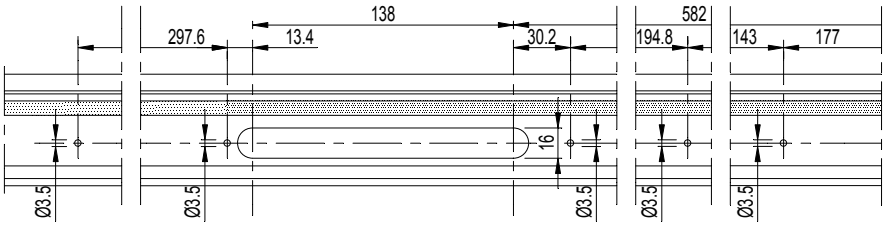

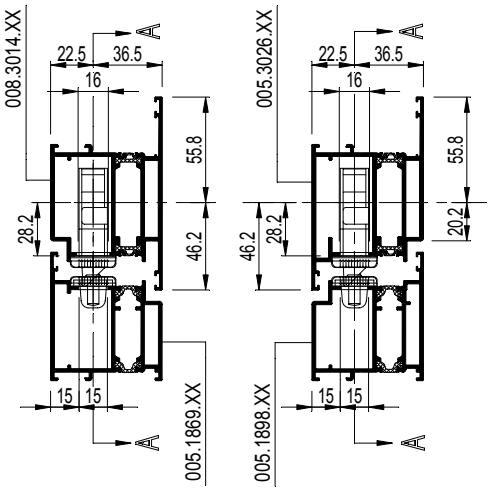

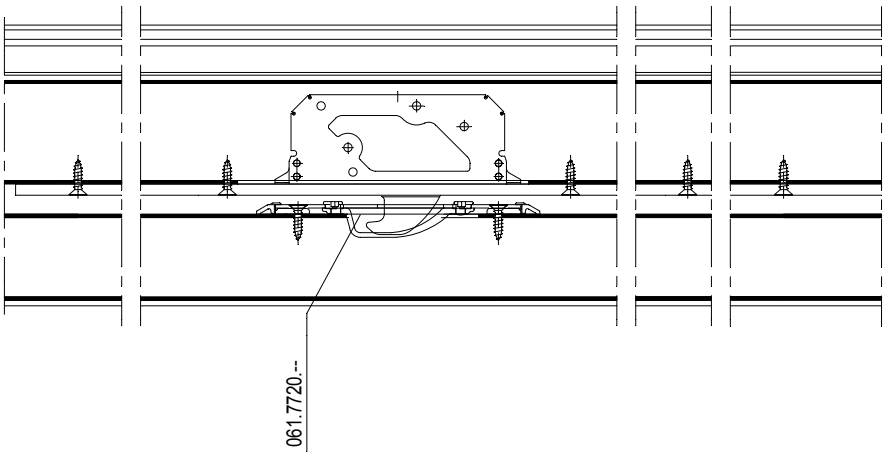

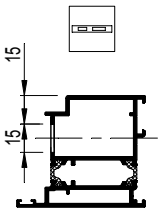

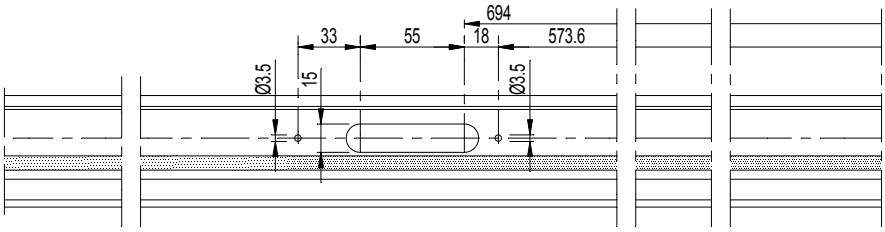

D0081846

F

CS 68-FP
EW 30

UITFREZING 3-PUNTSLOT WILKA 150Pa
FRAISAGE FERMETURE A 3 POINTS WILKA 150Pa
MILLING 3-POINT LOCK WILKA 150Pa
AUSFRAESUNG 3-FACHVERRIEGELUNG WILKA 150Pa

WILKA 3 061.7302.ZC (DIN L)	061.7772.-- (DIN L)
PZ LOCKS	2x 061.7720.--
	061.7725.-- (DIN L)
	2x 061.7726.--

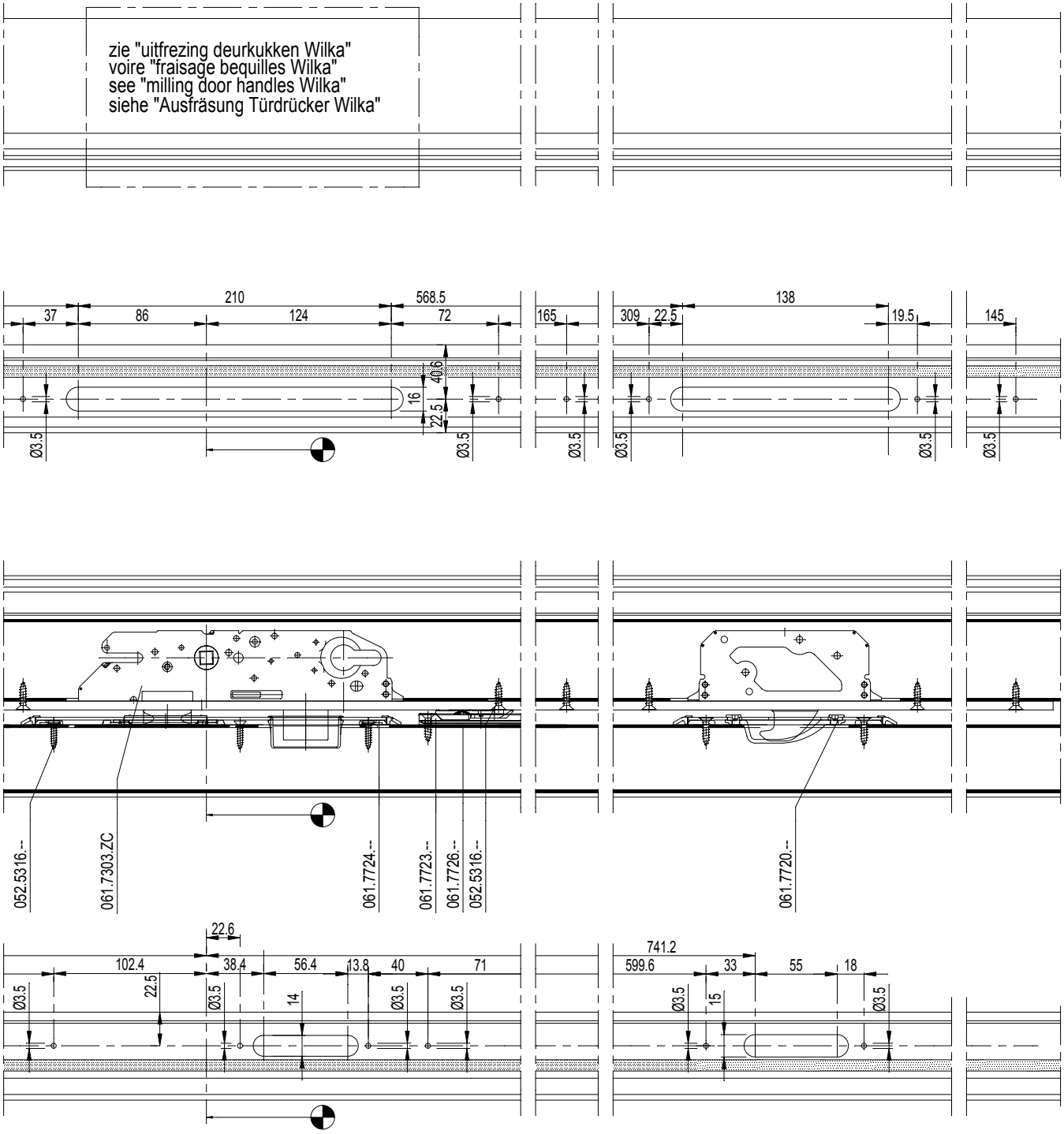

F

D0081846

CS 68-FP
EW 30

UITFREZING 1-PUNTSLOT BKS
FRAISAGE FERMETURE A 1 POINT BKS
MILLING 1 POINT LOCK BKS
AUSFRAESUNG 1-FACHVERRIEGELUNG BKS

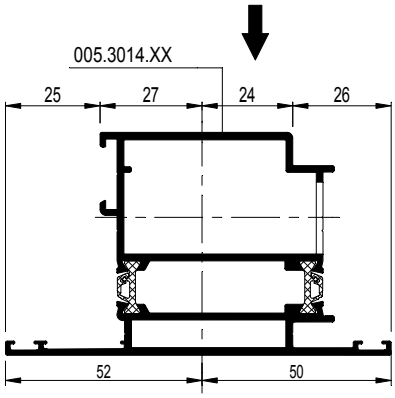

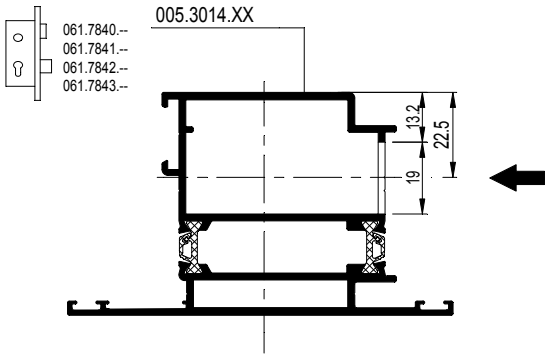

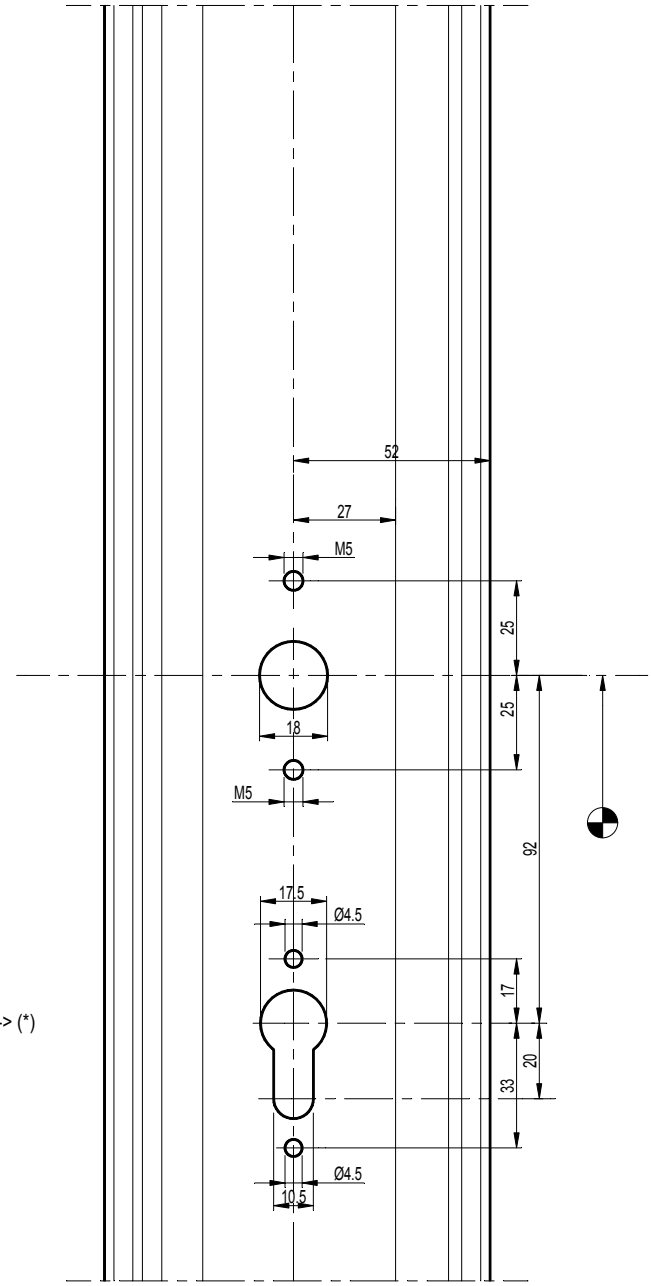

KABA -> (*)

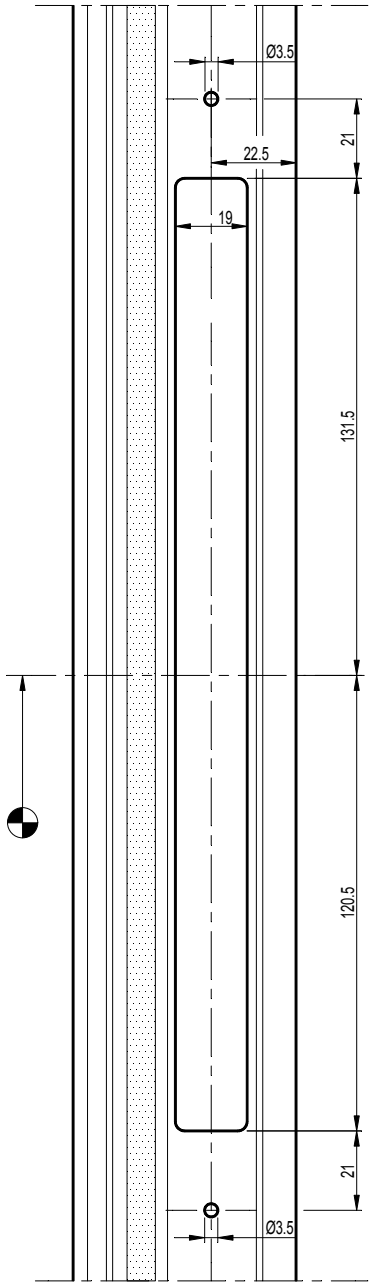

schaal - échelle
scale - Maßstab
1/2

D0081868

F

CS 68-FP
EW 30

UITFREZING 1-PUNTSLOT BKS
FRAISAGE FERMETURE A 1 POINT BKS
MILLING 1 POINT LOCK BKS
AUSFRAESUNG 1-FACHVERRIEGELUNG BKS

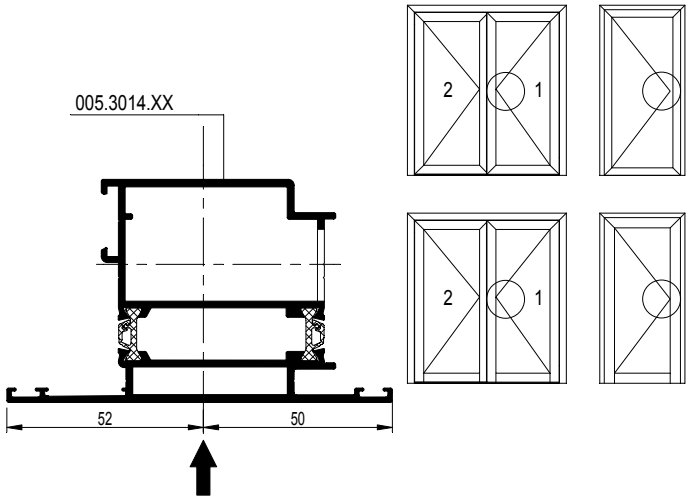

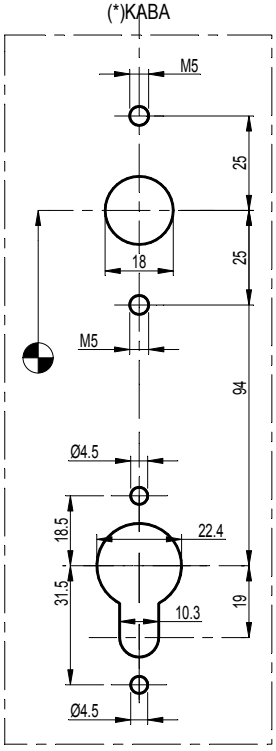

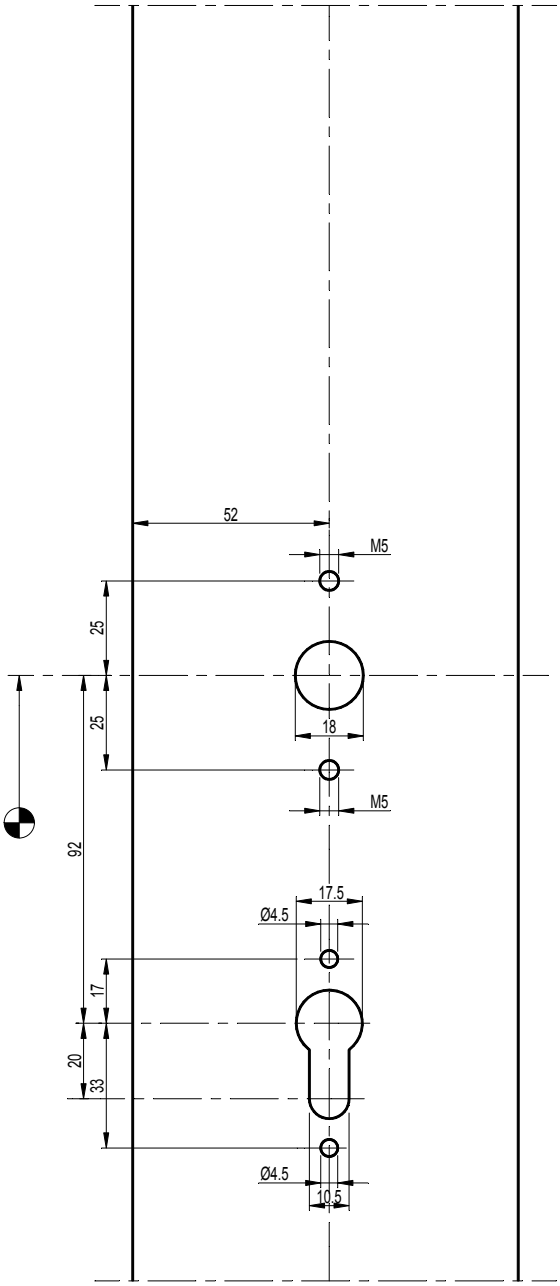

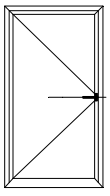

Referentiemaat
Dimension de référence
Reference dimension
Referenzmass

schaal - échelle
scale - Maßstab
1/2

D0081868

F

CS 68-FP
EW 30

UITFREZING 1-PUNTSLOT BKS
FRAISAGE FERMETURE A 1 POINT BKS
MILLING 1 POINT LOCK BKS
AUSFRAESUNG 1-FACHVERRIEGELUNG BKS

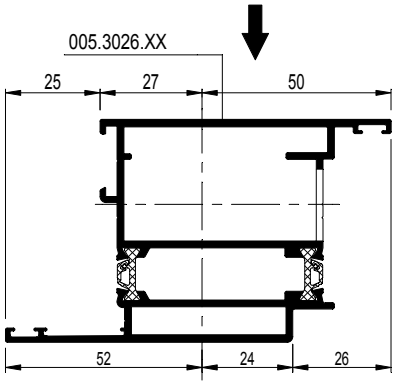

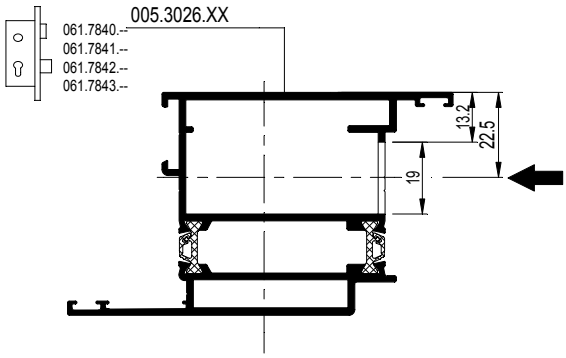

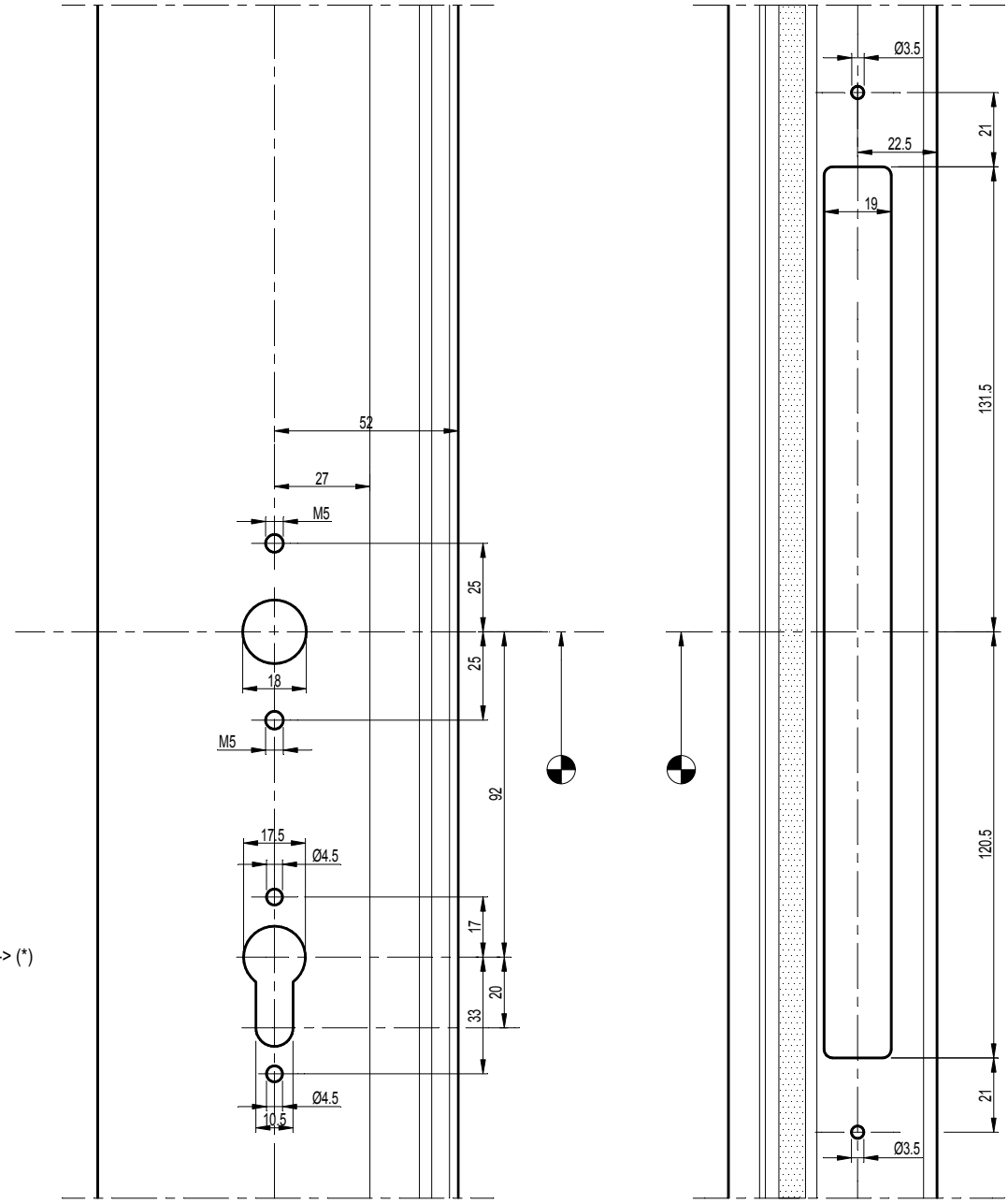

KABA -> (*)

schaal - échelle
scale - Maßstab
1/2

D0081876

F

CS 68-FP
EW 30

UITFREZING 1-PUNTSLOT BKS
FRAISAGE FERMETURE A 1 POINT BKS
MILLING 1 POINT LOCK BKS
AUSFRAESUNG 1-FACHVERRIEGELUNG BKS

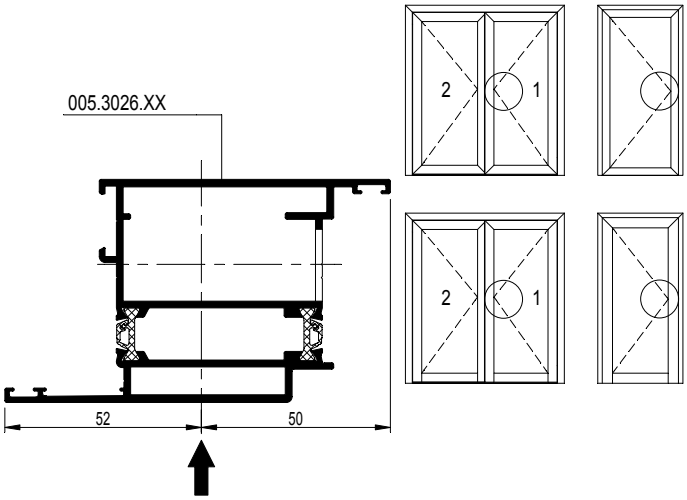

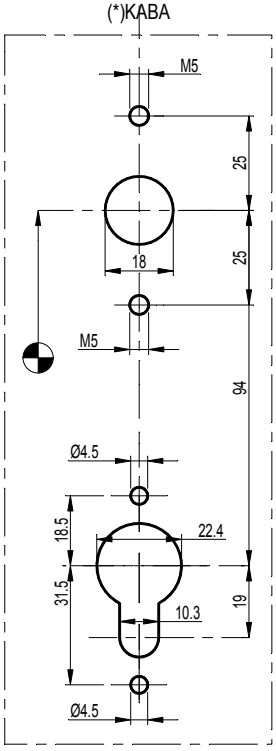

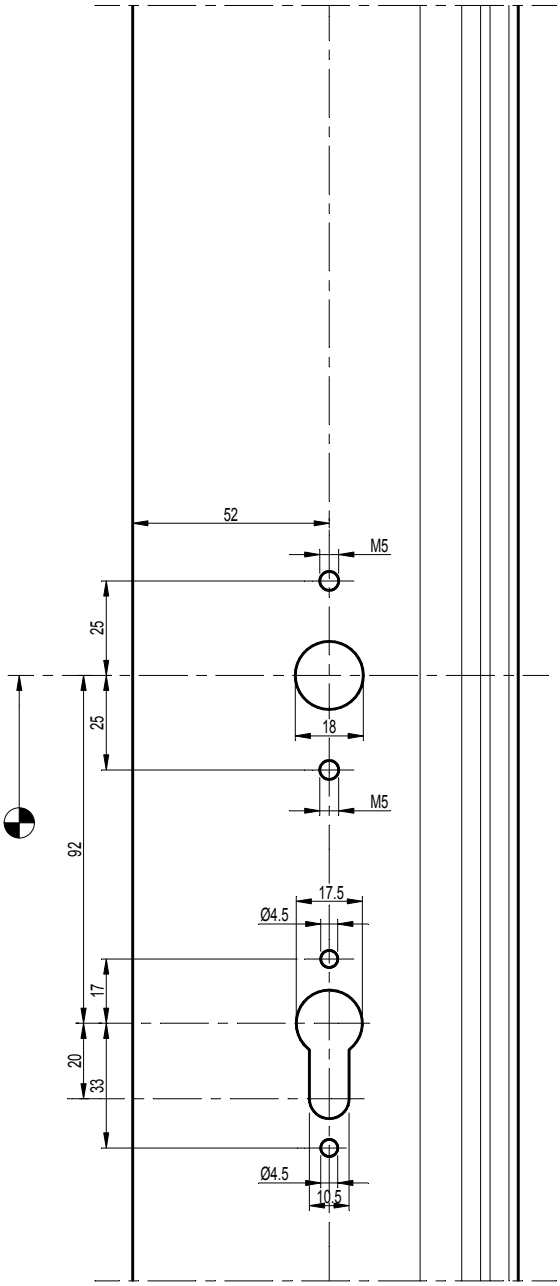

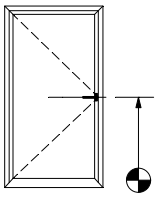

Referentiemaat
Dimension de référence
Reference dimension
Referenzmass

schaal - échelle
scale - Maßstab
1/2

F

D0081876

CS 68-FP
EW 30

UITFREZING SLOTPAD BKS
FRAISAGE GACHE BKS
MILLING RECEIVER BKS
AUSFRAESUNG SCHLIESSBLECH BKS

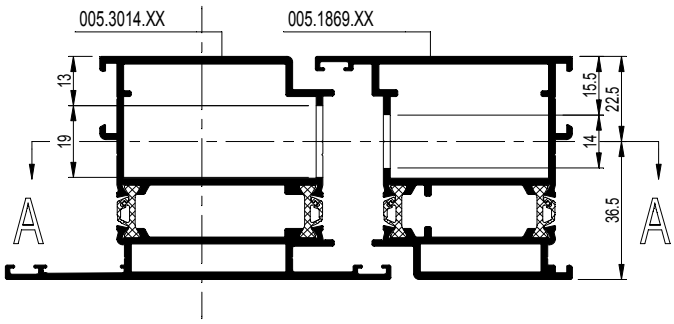

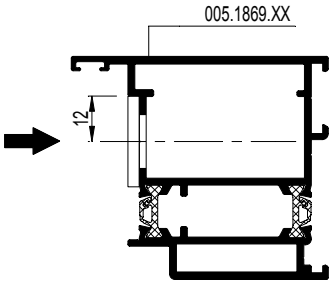

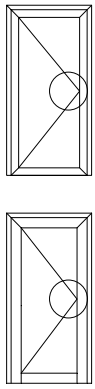

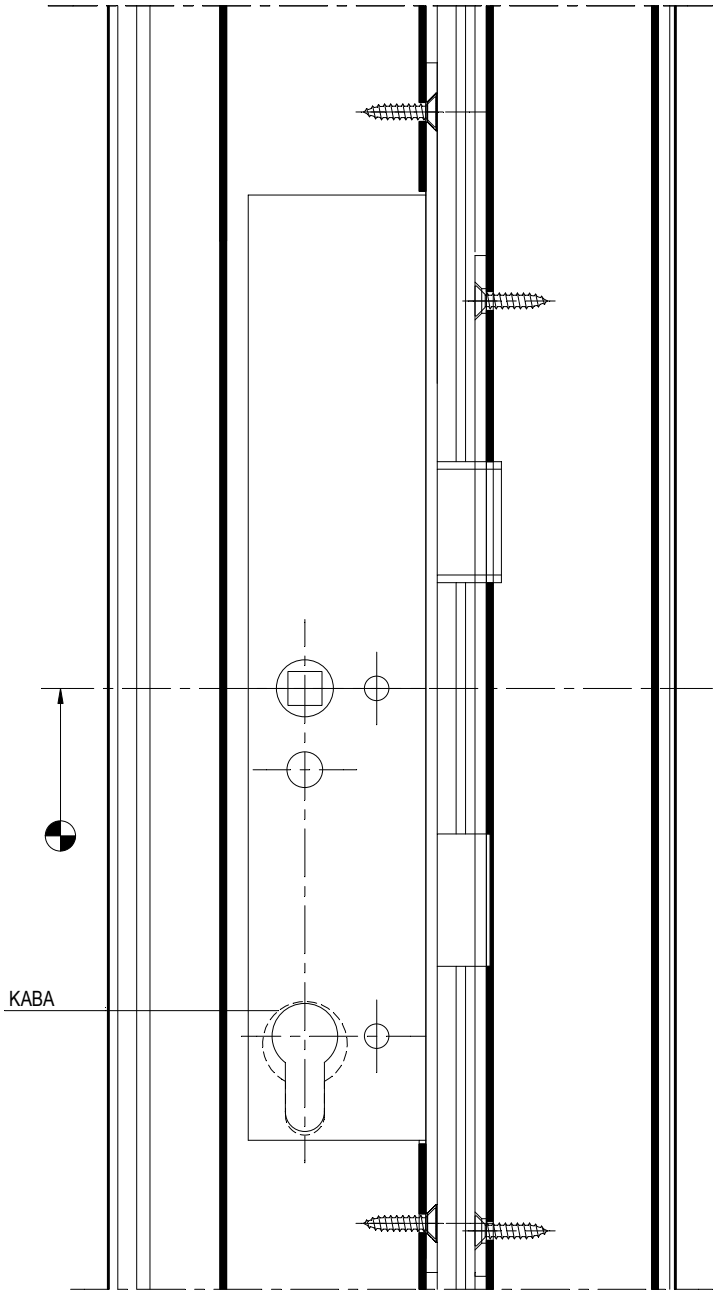

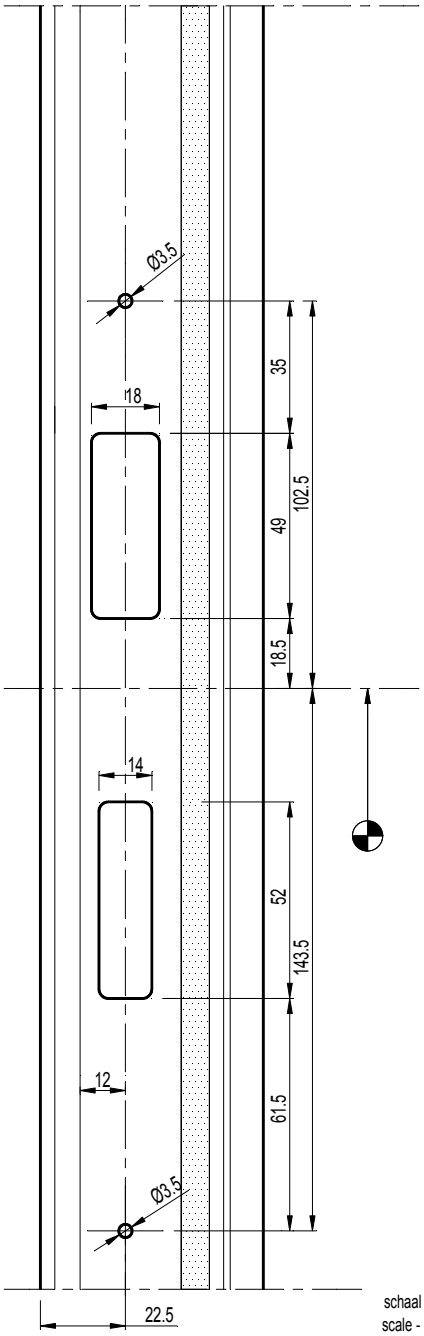

schaal - échelle
scale - Maßstab
1/2

D0081877

F

CS 68-FP
EW 30

UITFREZING SLOTPAD BKS
FRAISAGE GACHE BKS
MILLING RECEIVER BKS
AUSFRAESUNG SCHLIESSBLECH BKS

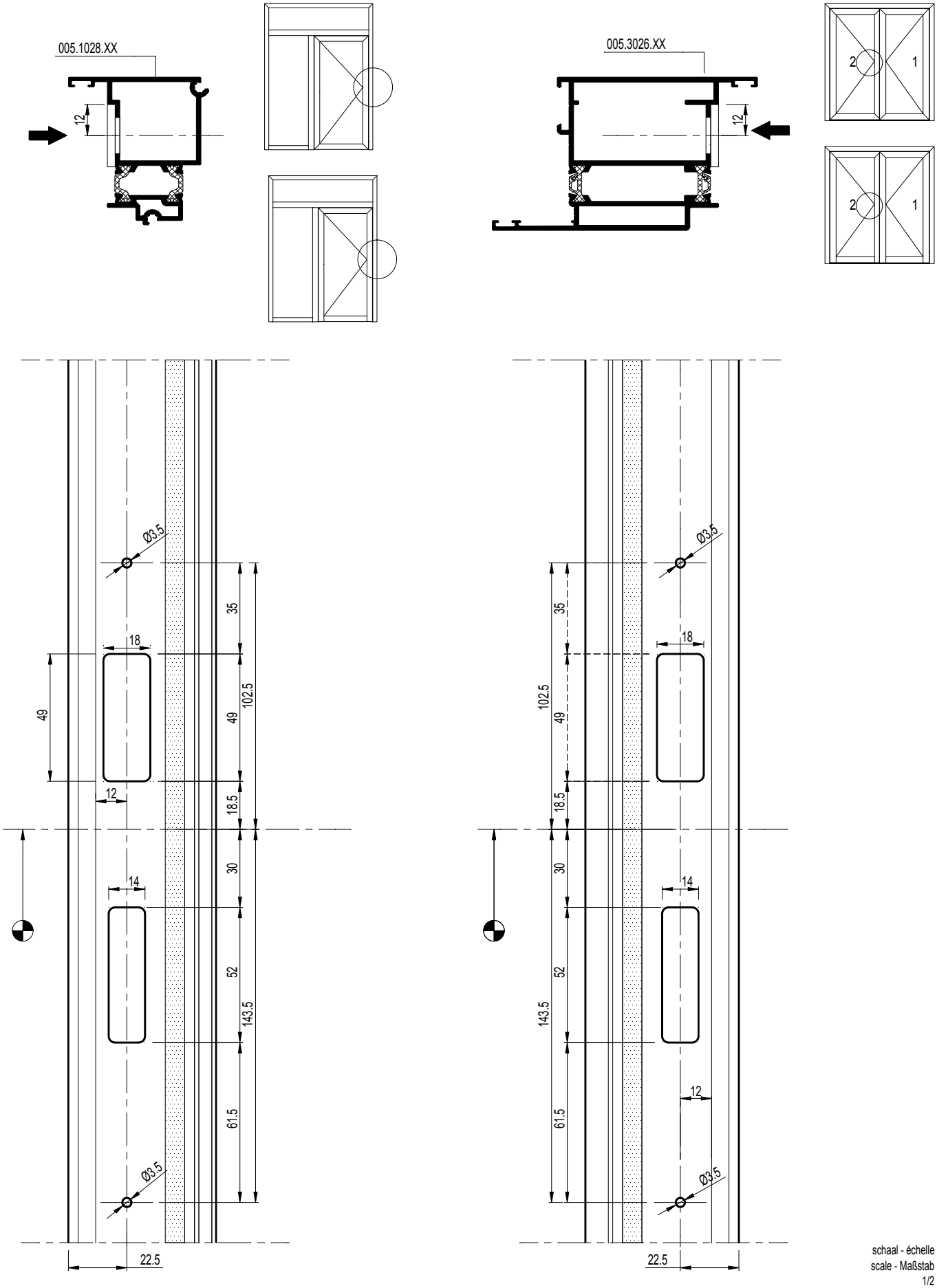

schaal - échelle
scale - Maßstab
1/2

D0081877

F

CS 68-FP
EW 30

UITFREZING SLOTPAD BKS
FRAISAGE GACHE BKS
MILLING RECEIVER BKS
AUSFRAESUNG SCHLIESSBLECH BKS

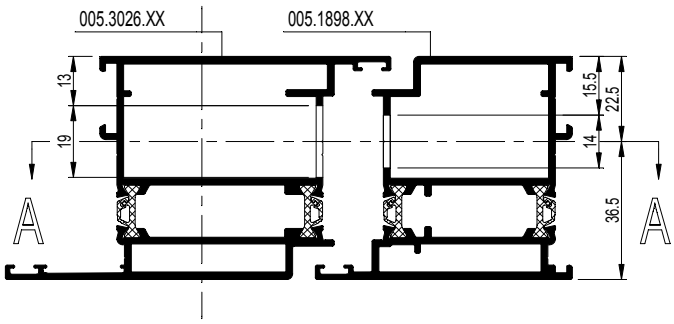

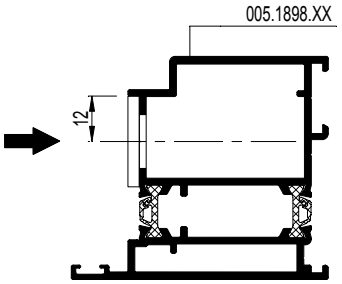

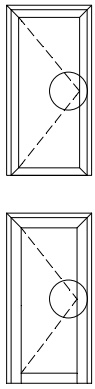

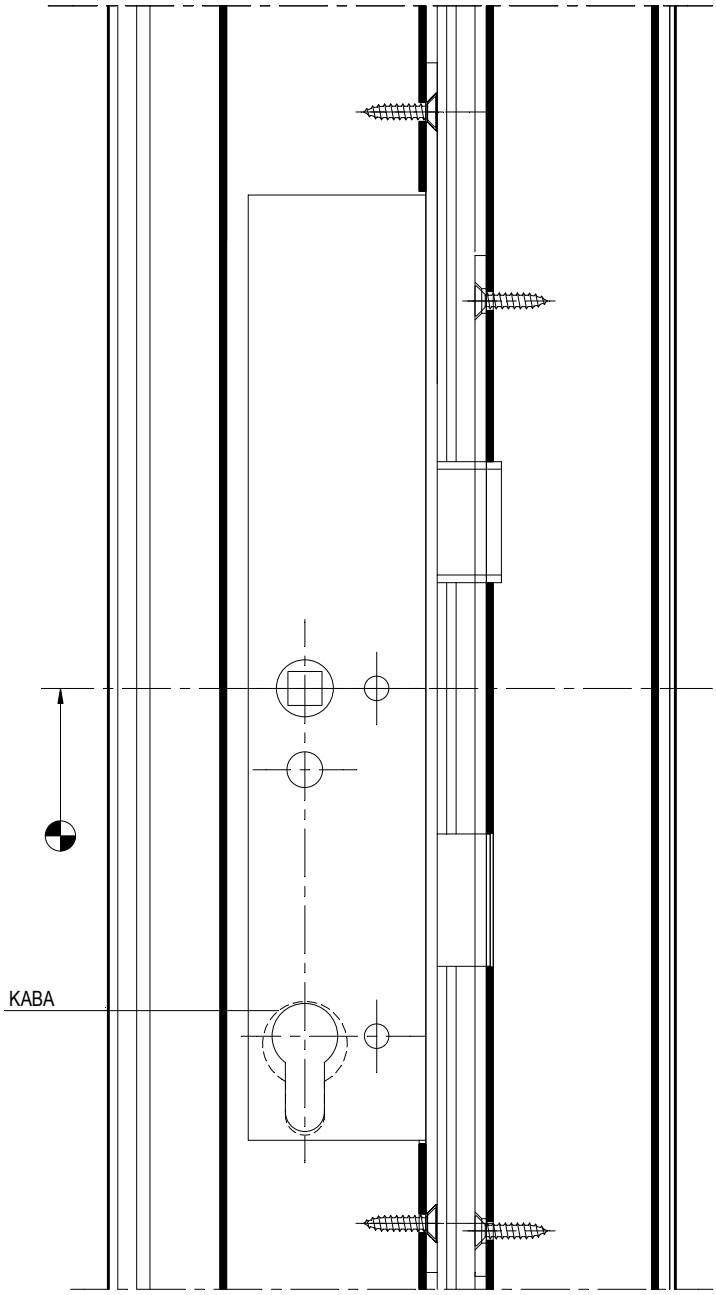

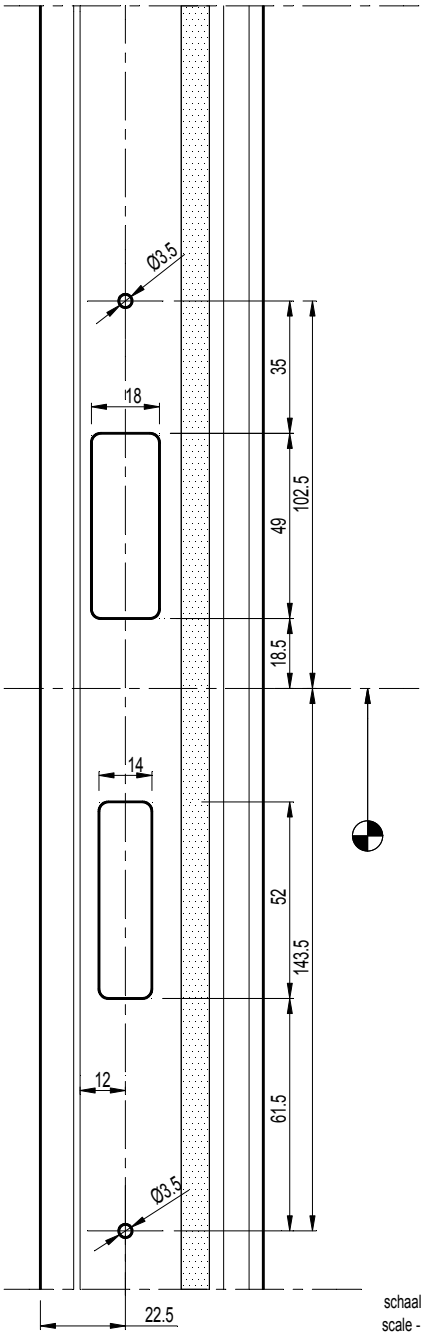

schaal - échelle
scale - Maßstab
1/2

D0081878

F

CS 68-FP
EW 30

UITFREZING SLOTPAD BKS
FRAISAGE GACHE BKS
MILLING RECEIVER BKS
AUSFRAESUNG SCHLIESSBLECH BKS

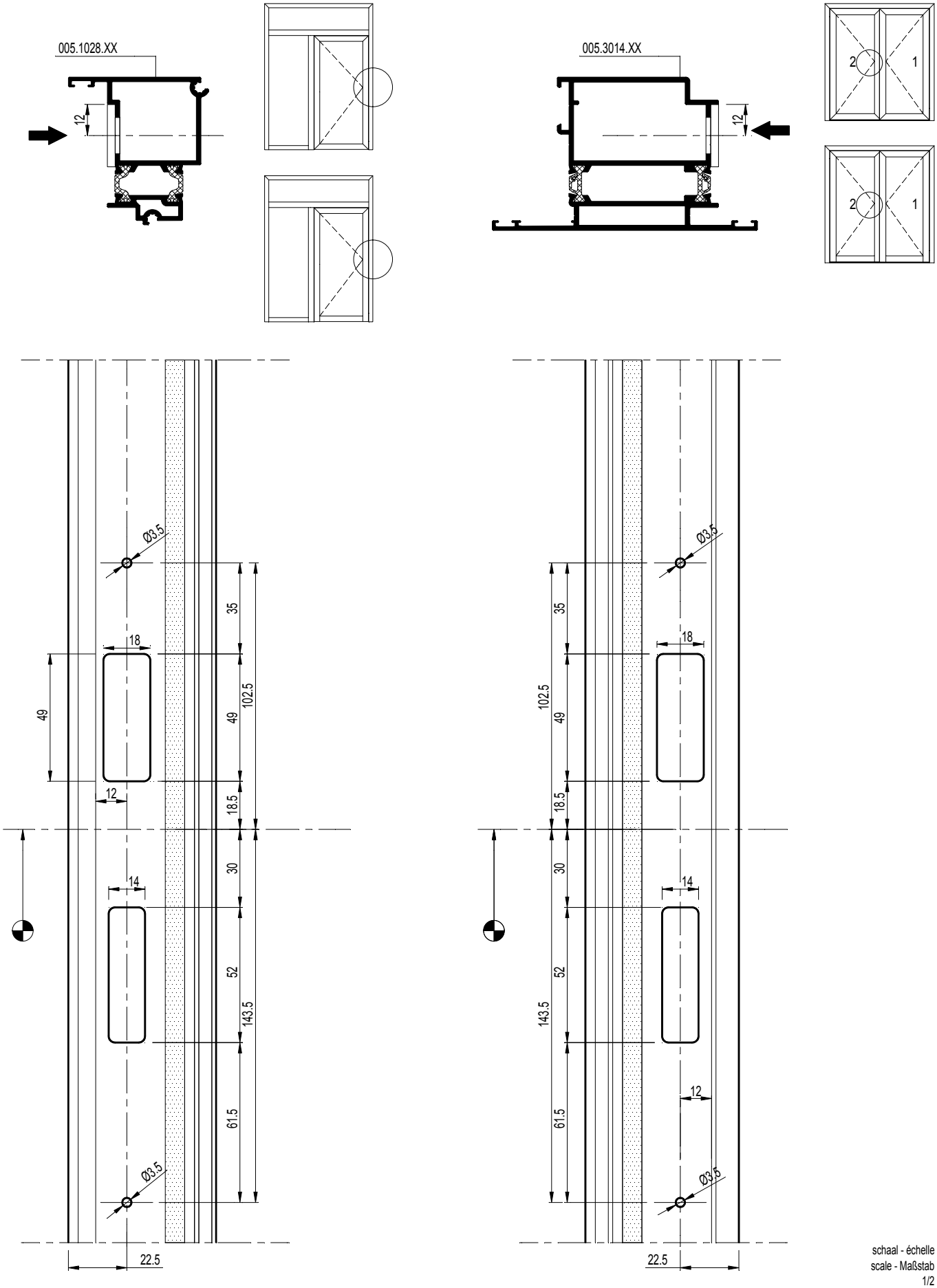

schaal - échelle
scale - Maßstab
1/2

D0081878

F

CS 68-FP
EW 30

UITFREZING 1-PUNTSLOT
FRAISAGE FERMETURE A 1 POINT
MILLING 1 POINT LOCK
AUSFRAESUNG 1-FACHVERRIEGELUNG

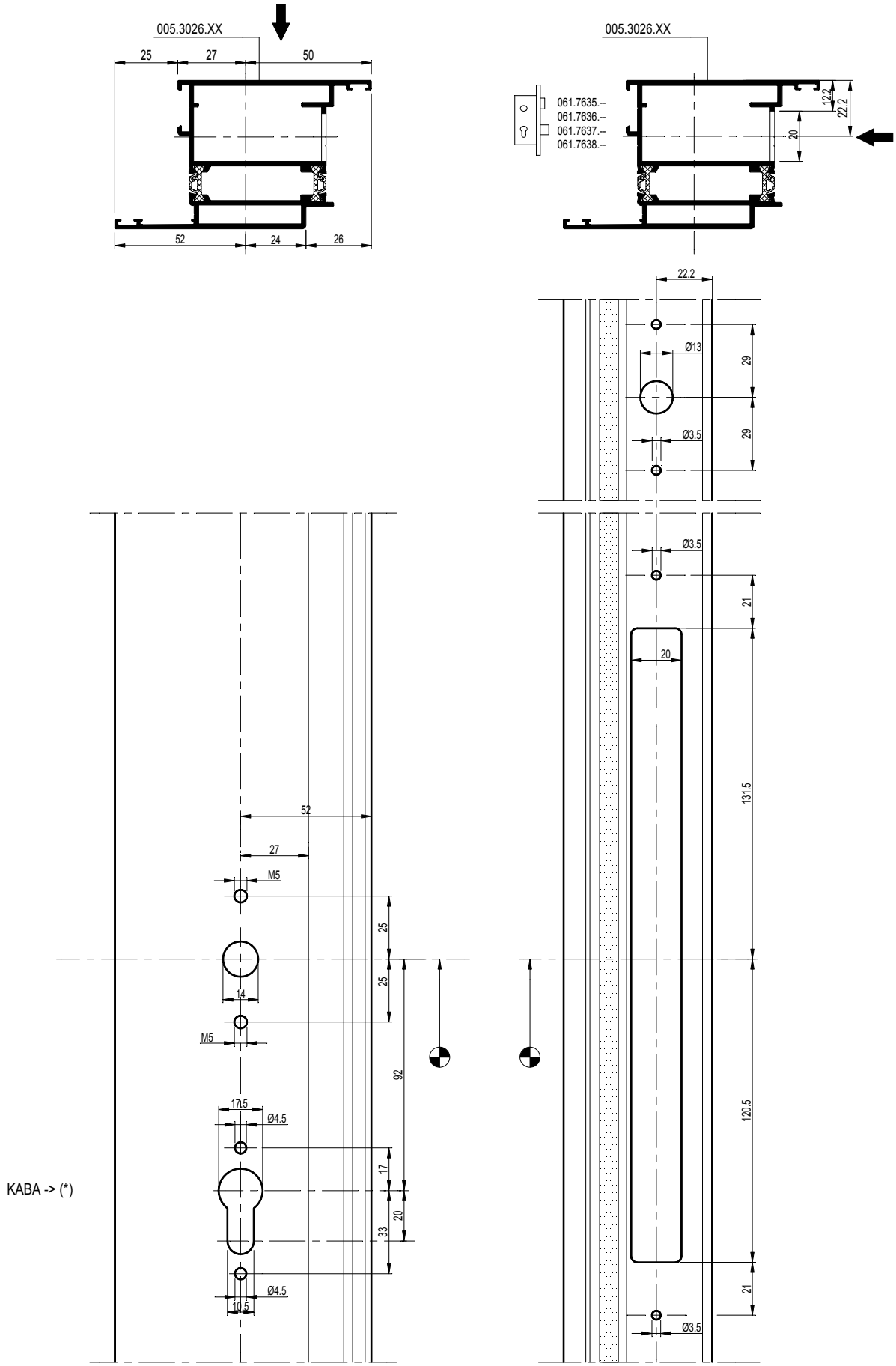

schaal - échelle
scale - Maßstab
1/2

D0081879

F

CS 68-FP
EW 30

UITFREZING 1-PUNTSLOT
FRAISAGE FERMETURE A 1 POINT
MILLING 1 POINT LOCK
AUSFRAESUNG 1-FACHVERRIEGELUNG

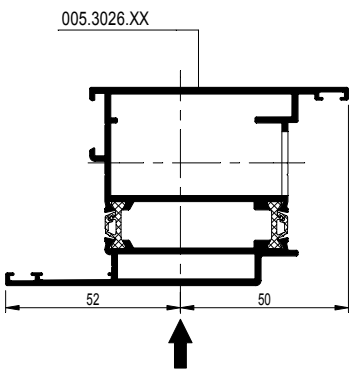

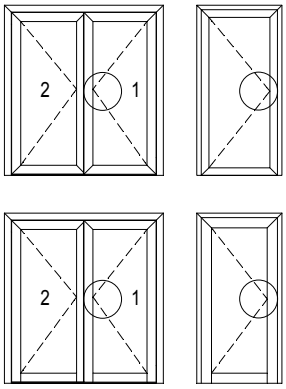

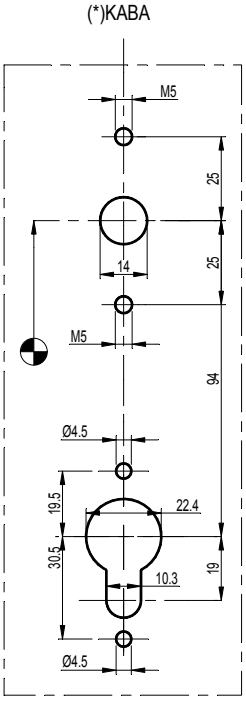

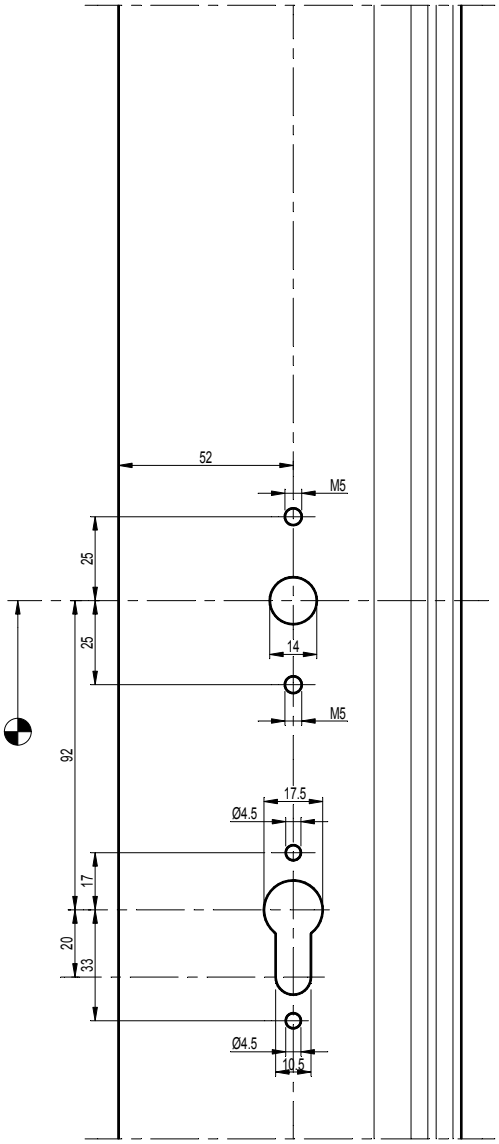

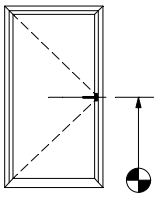

Referentiemaat
Dimension de référence
Reference dimension
Referenzmass

schaal - échelle
scale - Maßstab
1/2

D0081879

F

CS 68-FP
EW 30

UITFREZING 1-PUNTSLOT
FRAISAGE FERMETURE A 1 POINT
MILLING 1 POINT LOCK
AUSFRAESUNG 1-FACHVERRIEGELUNG

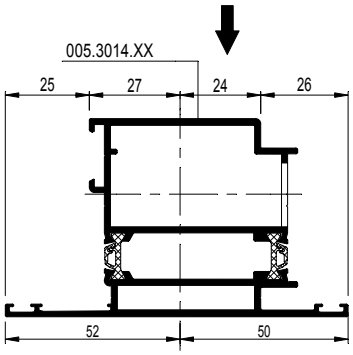

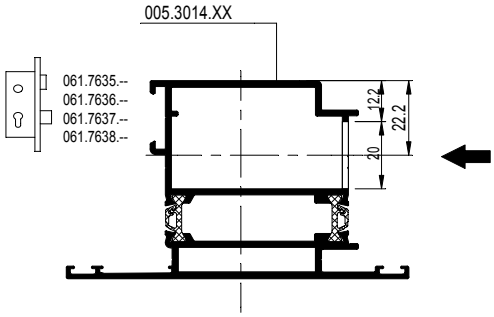

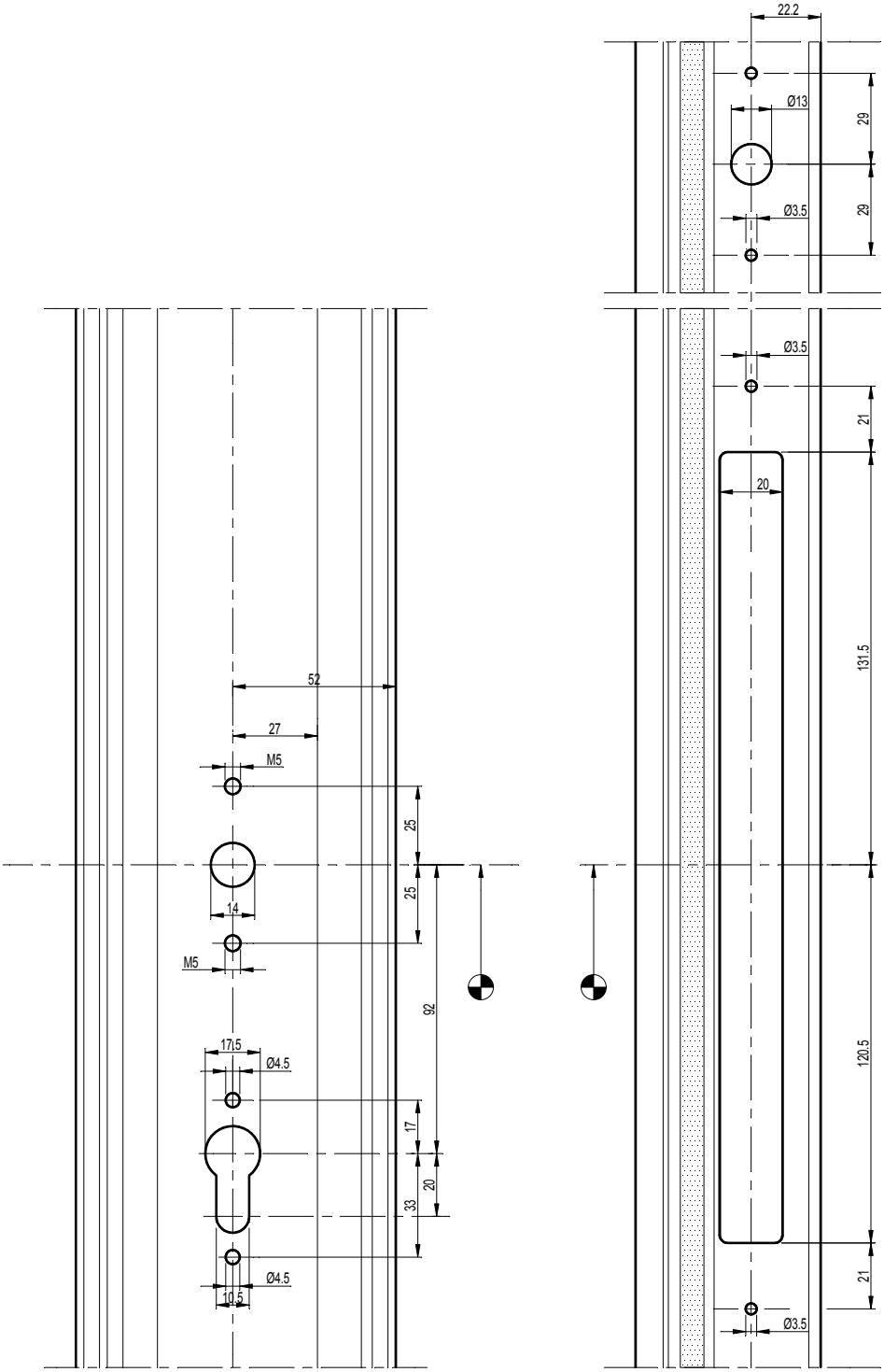

KABA -> (*)

schaal - échelle
scale - Maßstab
1/2

D0081882

F

CS 68-FP
EW 30

UITFREZING 1-PUNTSLOT
FRAISAGE FERMETURE A 1 POINT
MILLING 1 POINT LOCK
AUSFRAESUNG 1-FACHVERRIEGELUNG

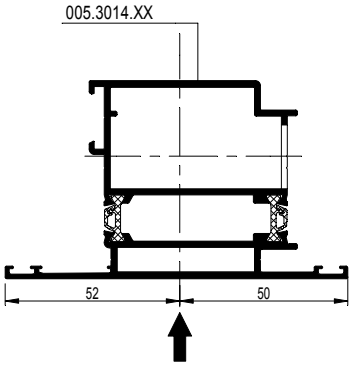

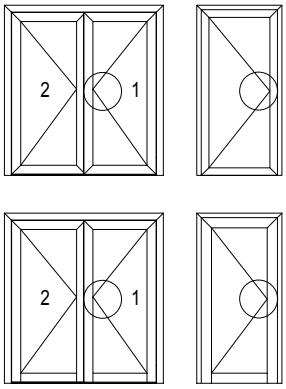

(*)KABA

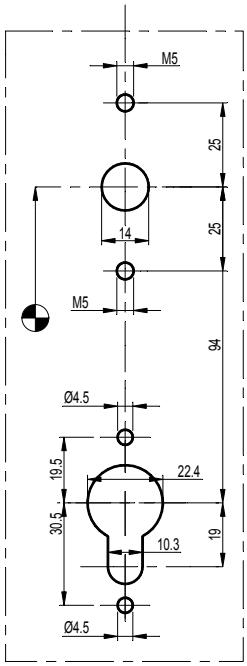

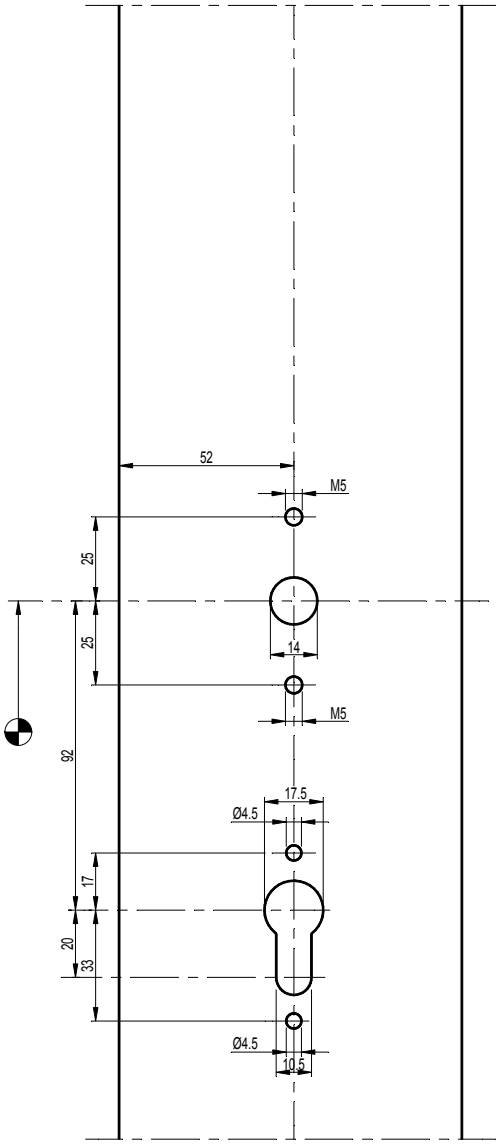

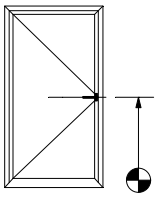

Referentiemaat
Dimension de référence
Reference dimension
Referenzmass

schaal - échelle
scale - Maßstab
1/2

D0081882

F

CS 68-FP
EW 30

UITFREZING SLOTPAD
FRAISAGE GACHE
MILLING RECEIVER
AUSFRAESUNG SCHLIESSBLECH

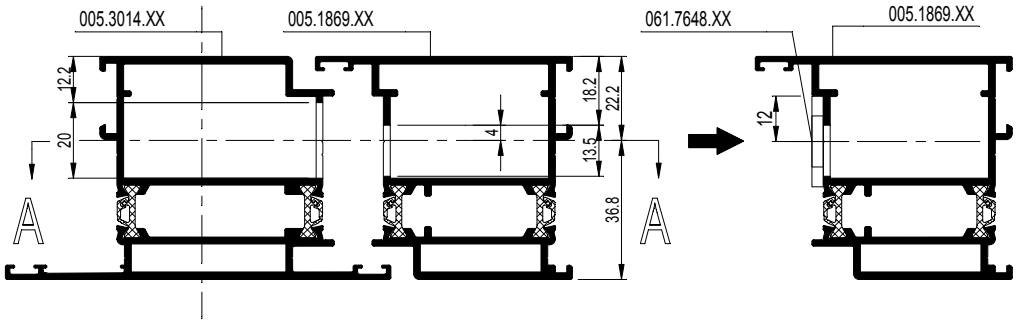

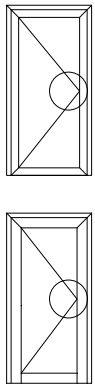

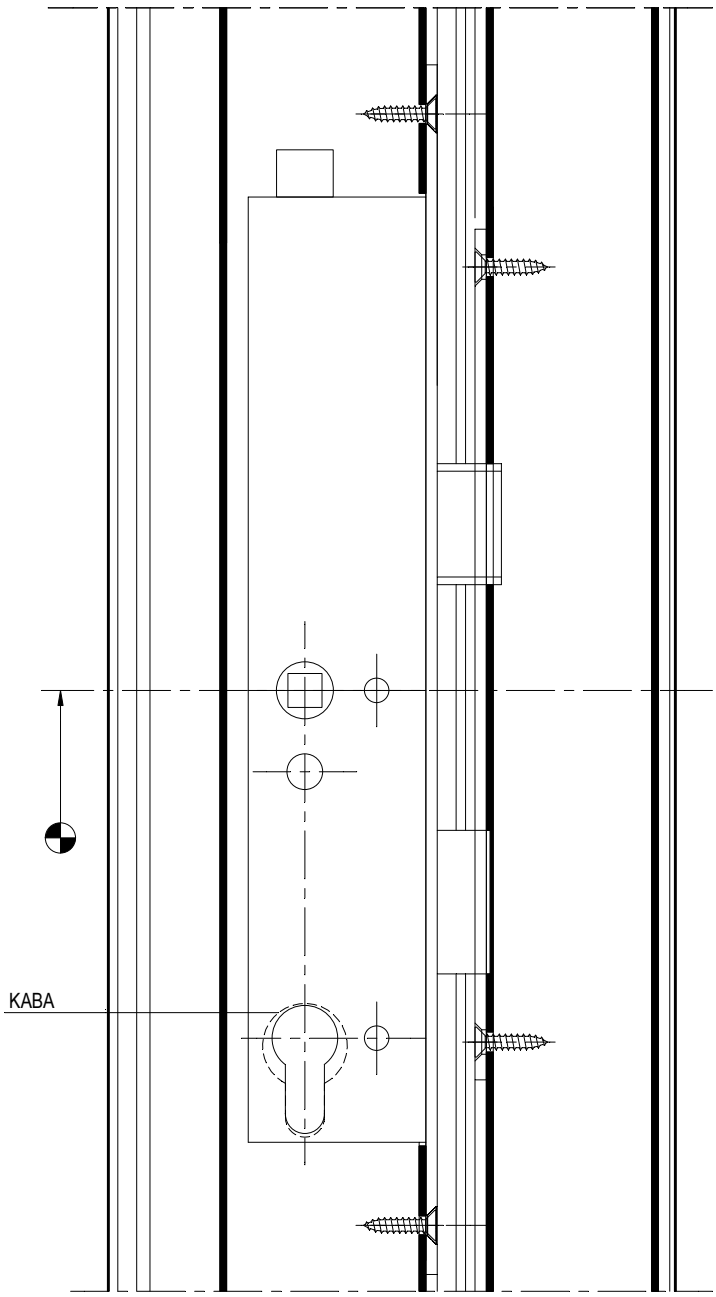

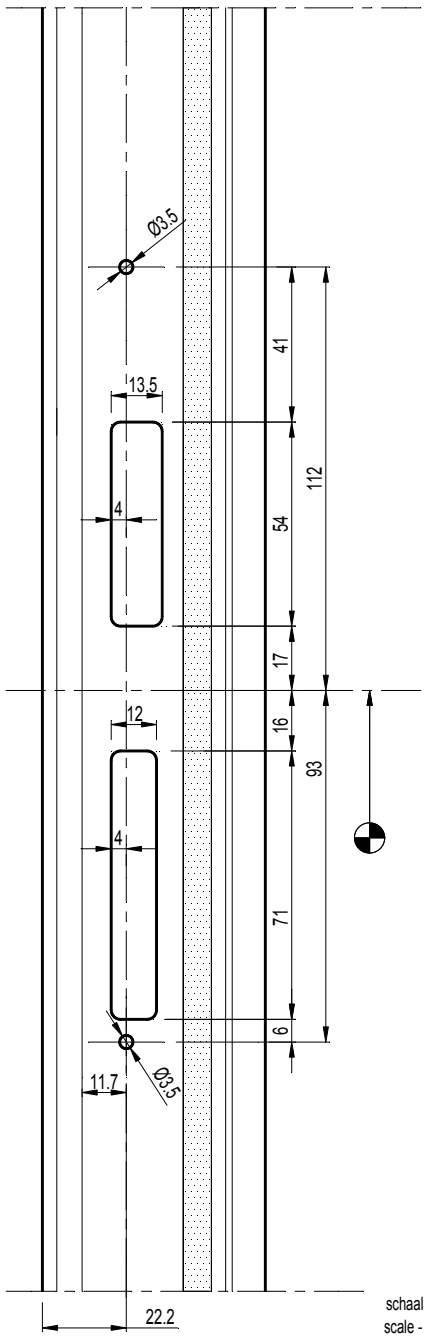

schaal - échelle
scale - Maßstab
1/2

D0081889

F

CS 68-FP
EW 30

UITFREZING SLOTPAD
FRAISAGE GACHE
MILLING RECEIVER
AUSFRAESUNG SCHLIESSBLECH

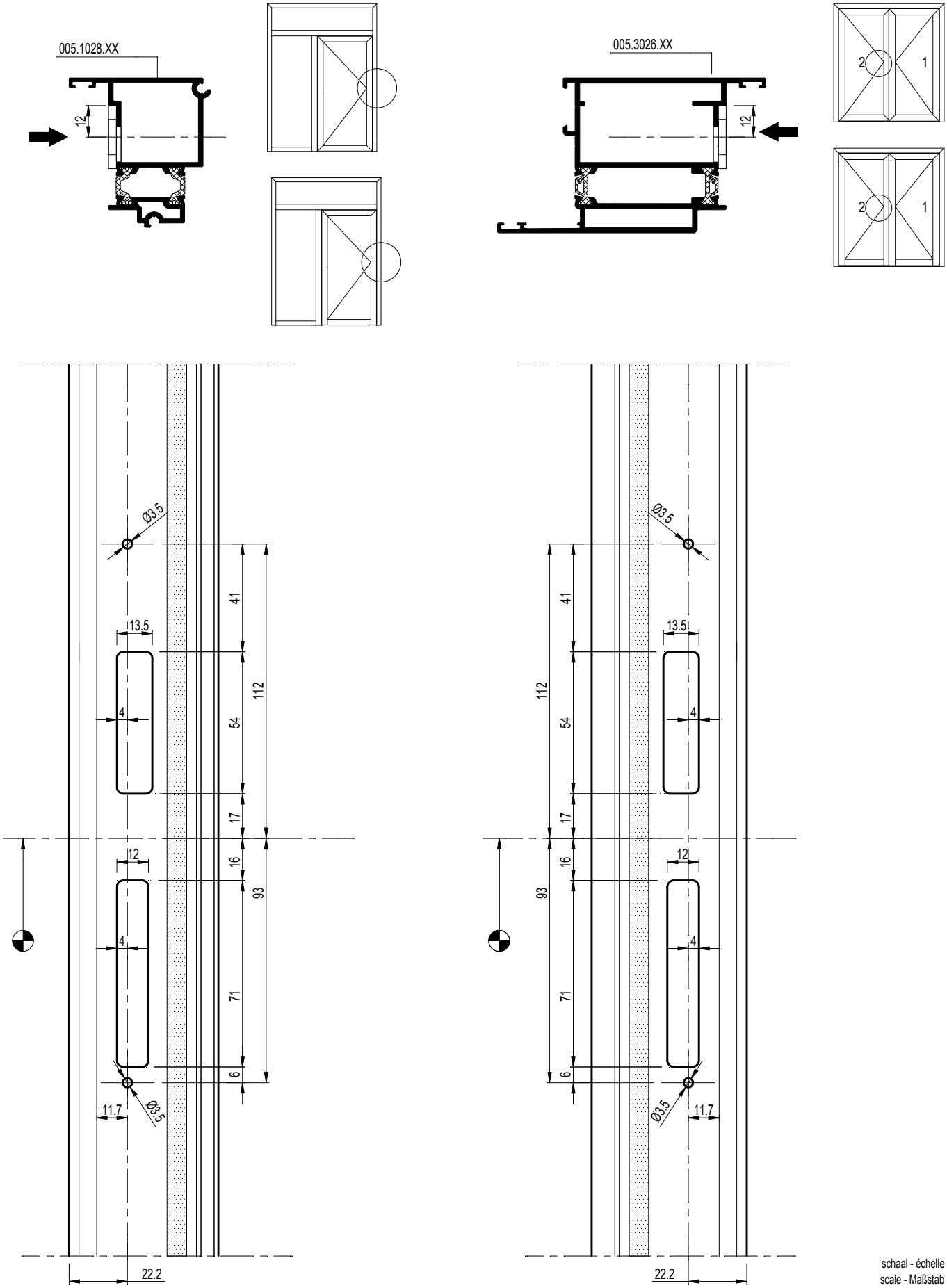

schaal - échelle
scale - Maßstab
1/2

D0081889

F

CS 68-FP
EW 30

UITFREZING SLOTPAD
FRAISAGE GACHE
MILLING RECEIVER
AUSFRAESUNG SCHLIESSBLECH

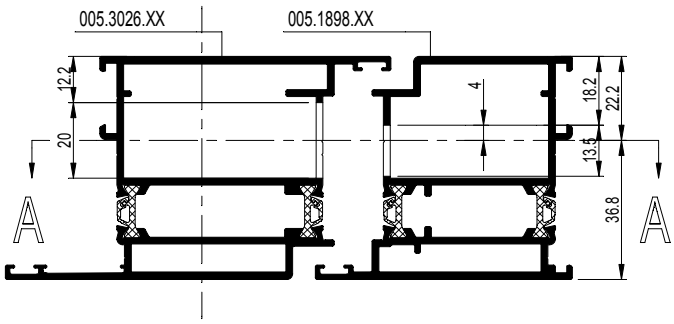

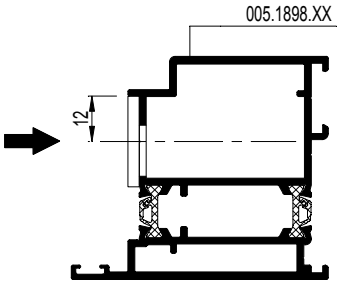

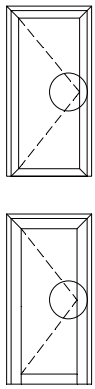

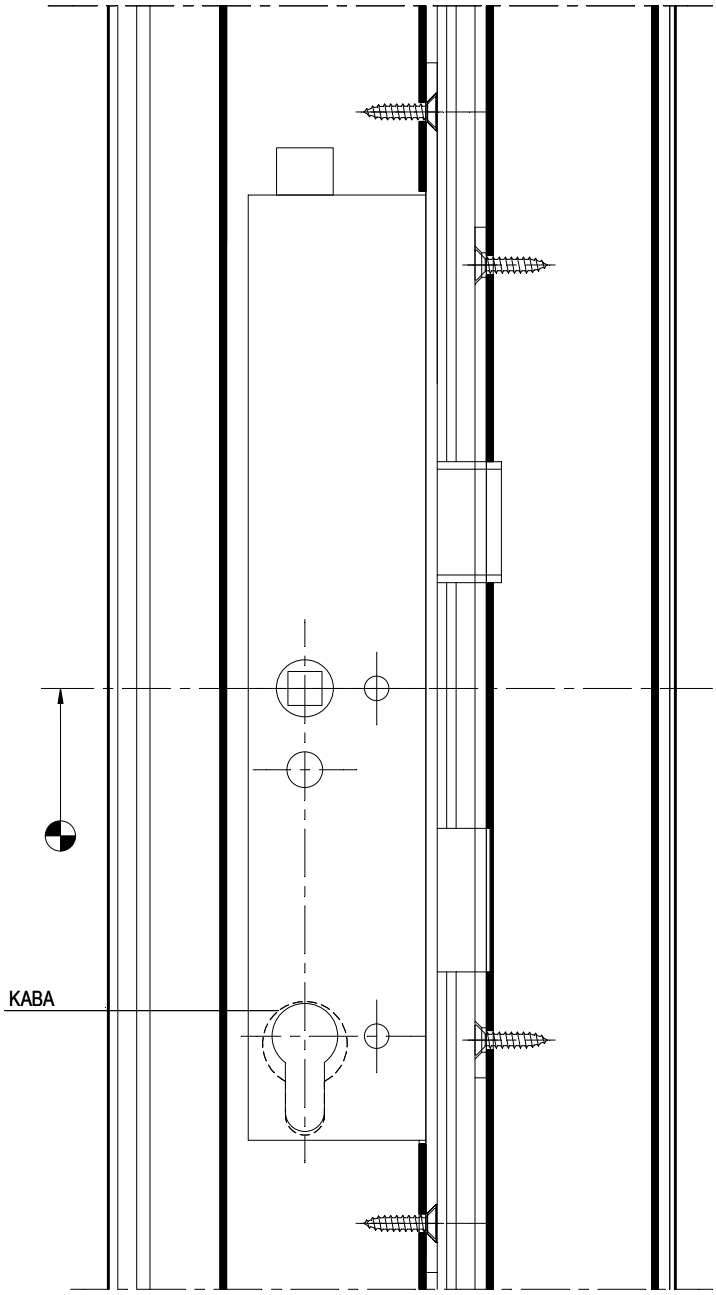

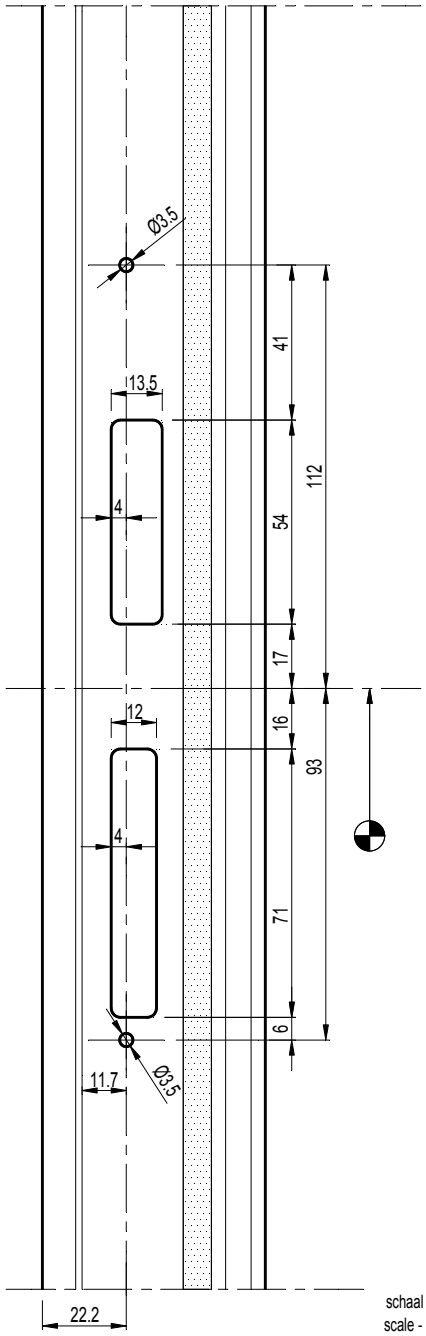

schaal - échelle
scale - Maßstab
1/2

D0081891

F

CS 68-FP
EW 30

UITFREZING SLOTPAD
FRAISAGE GACHE
MILLING RECEIVER
AUSFRAESUNG SCHLIESSBLECH

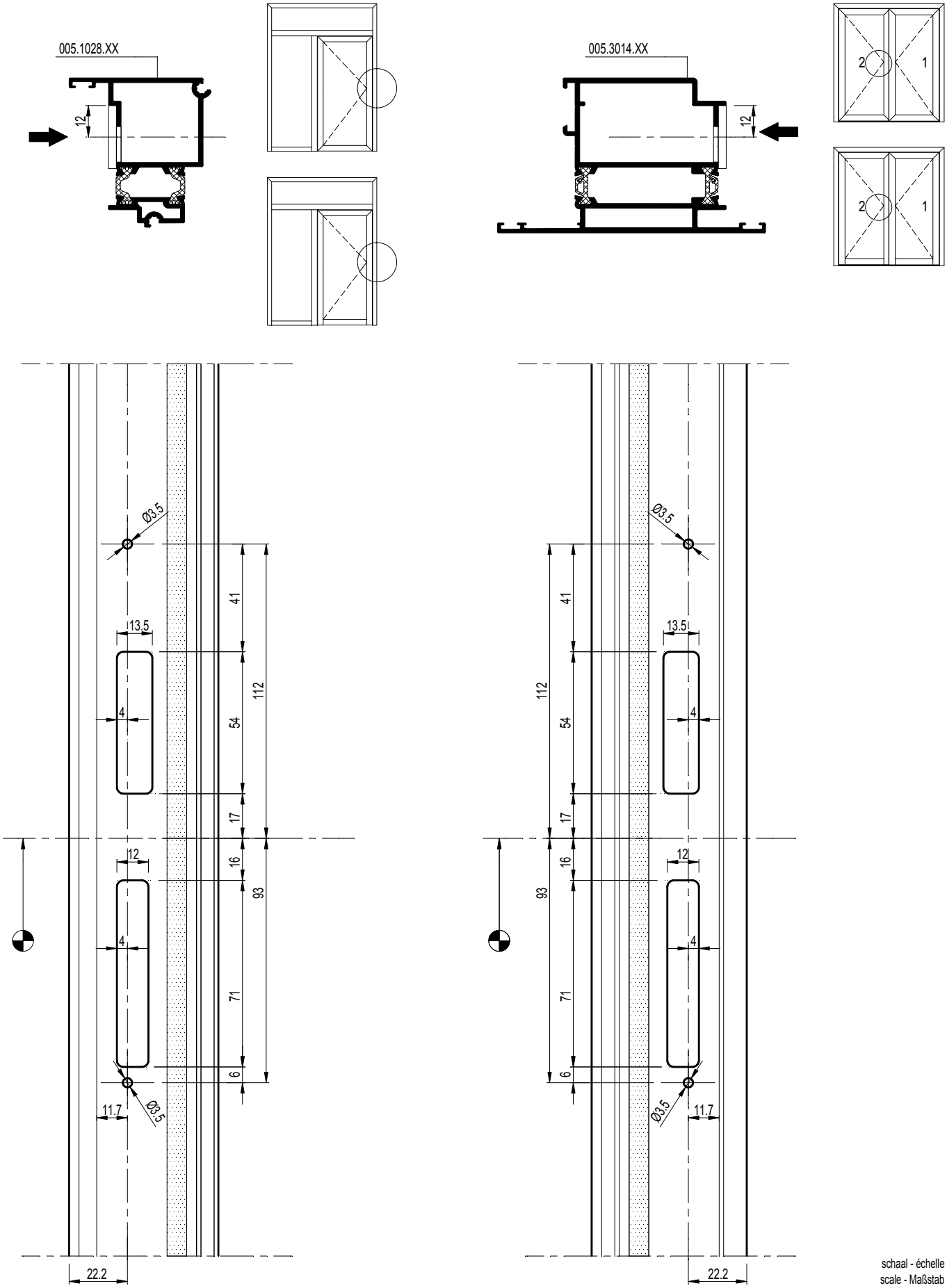

schaal - échelle
scale - Maßstab
1/2

D0081891

F

OVERZICHT
APERCU
OVERVIEW
UEBERSICHT

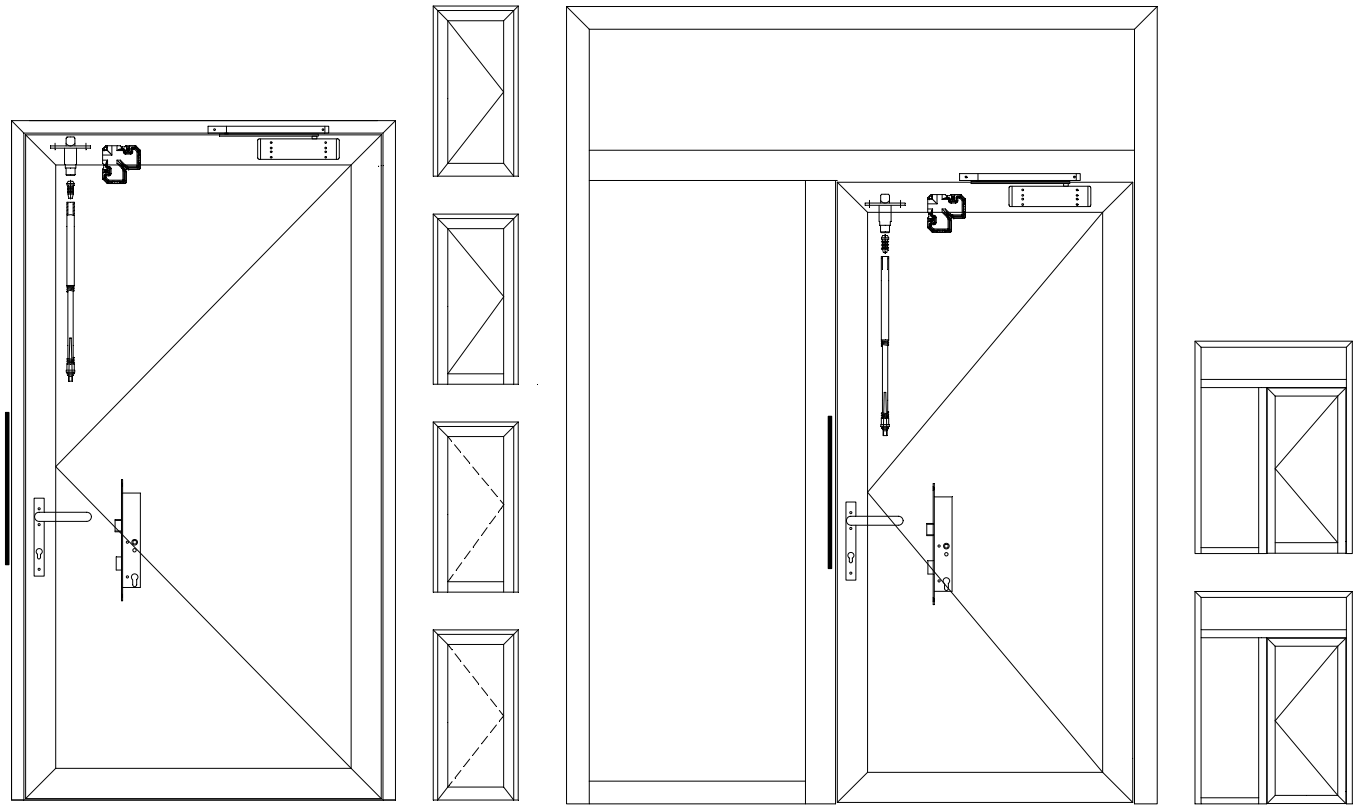

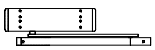	065.7581.14
	061.6650.--

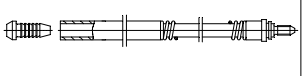	061.6417.--
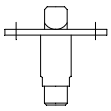	061.6419.--
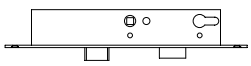	061.7840.-- 061.7841.-- 061.7842.-- 061.7843.--
	068.8807.00

	065.7581.14
	061.7648.--

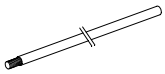	061.7643.--
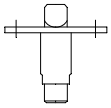	061.6416.--
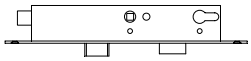	061.7635.-- 061.7636.-- 061.7637.-- 061.7638.--
	068.8807.00

D0081893

F

CS 68-FP
EW 30

OVERZICHT
APERCU
OVERVIEW
UEBERSICHT

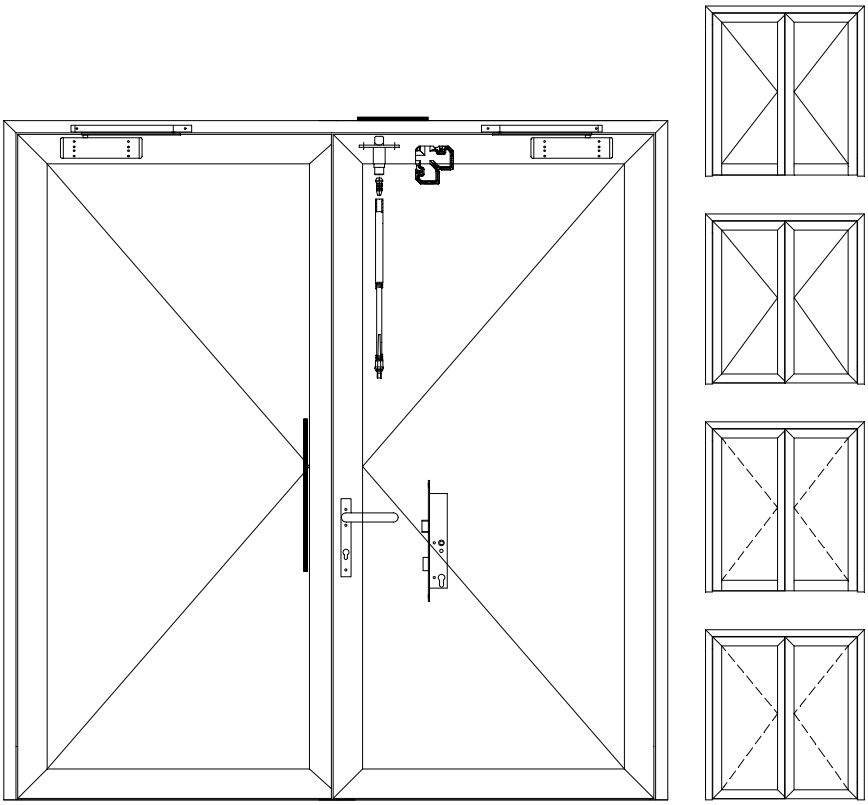

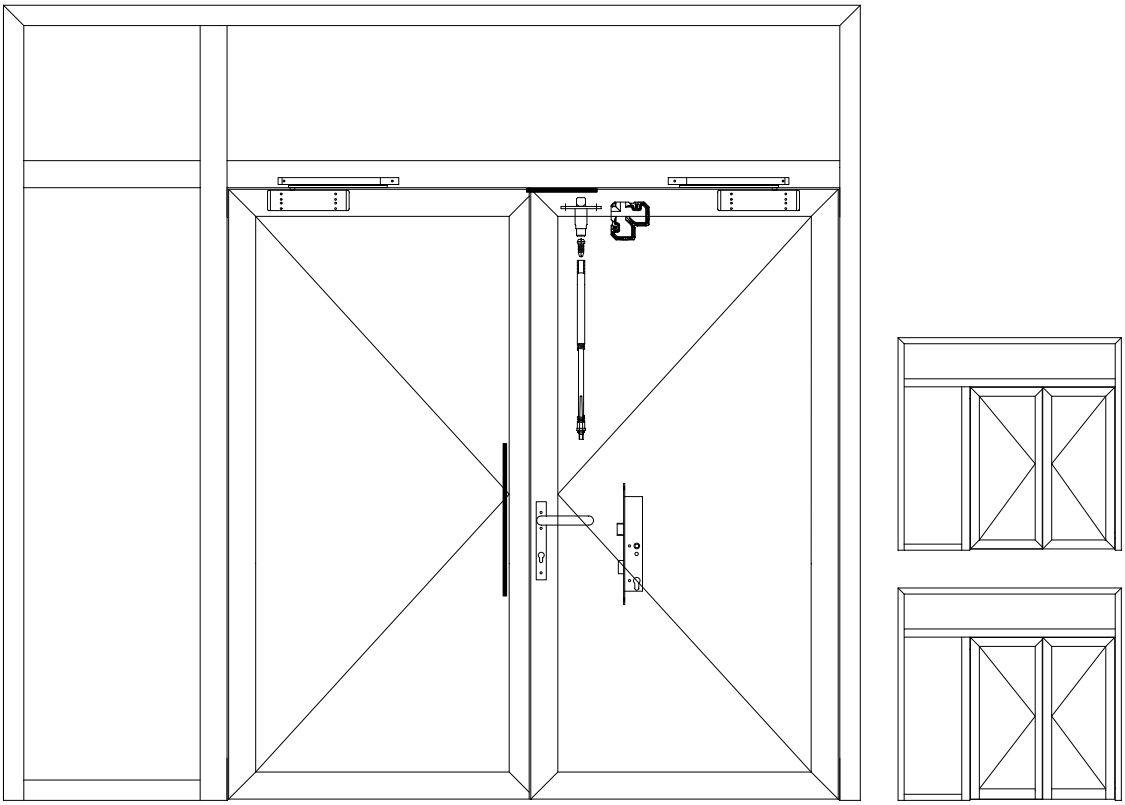

F

D0081893

UITFREZING GELEIDERS Z-T DEUR
FRAISAGE GUIDES PORTE Z-T
MILLING GUIDES Z-T DOOR
AUSFRAESUNG FUEHRUNGEN Z-T TUER

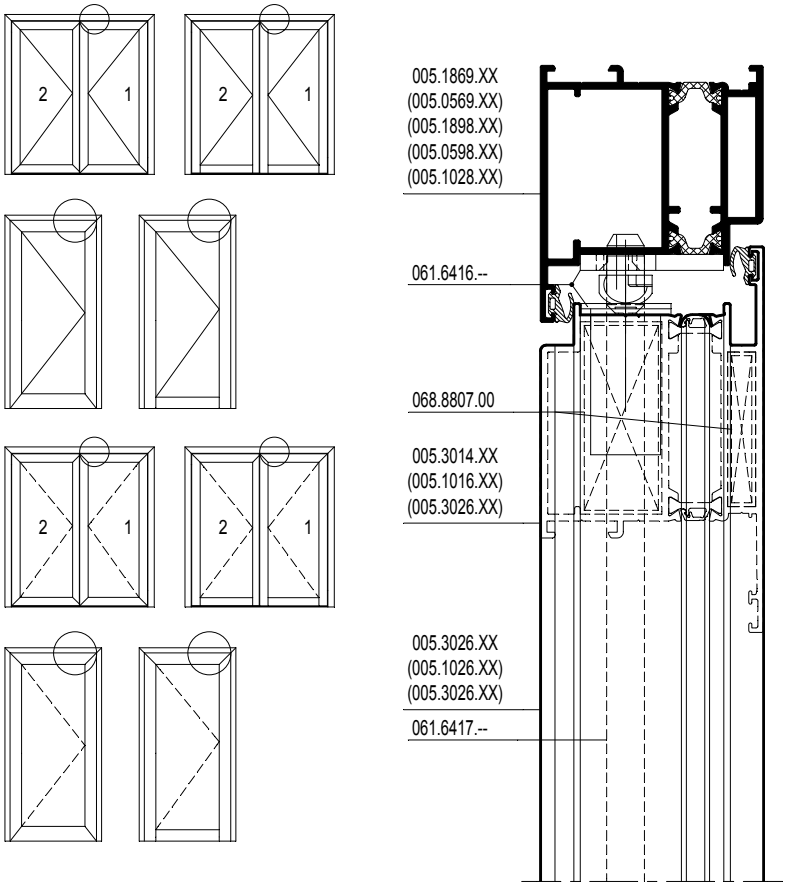

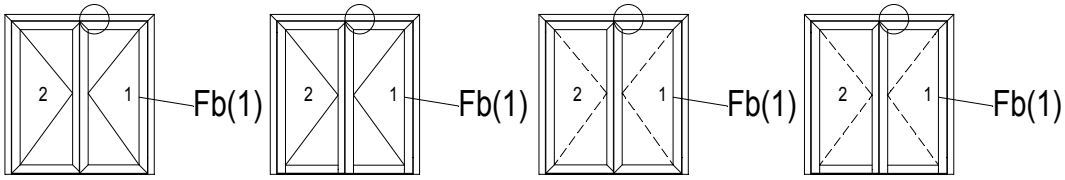

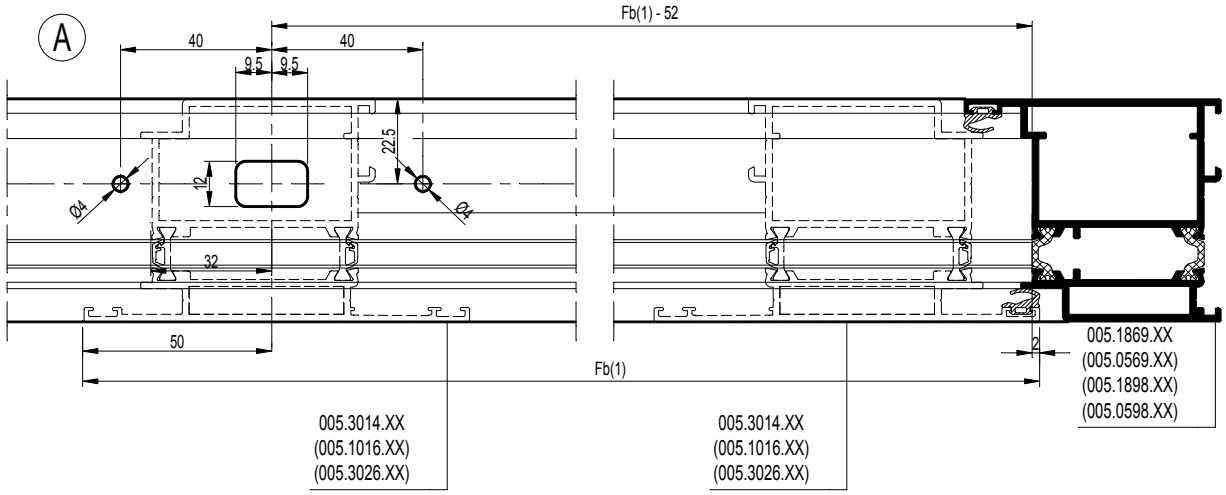

schaal - échelle
scale - Maßstab
1/2

D0081898

F

CS 68-FP
EW 30

UITFREZING GELEIDERS Z-T DEUR
FRAISAGE GUIDES PORTE Z-T
MILLING GUIDES Z-T DOOR
AUSFRAESUNG FUEHRUNGEN Z-T TUER

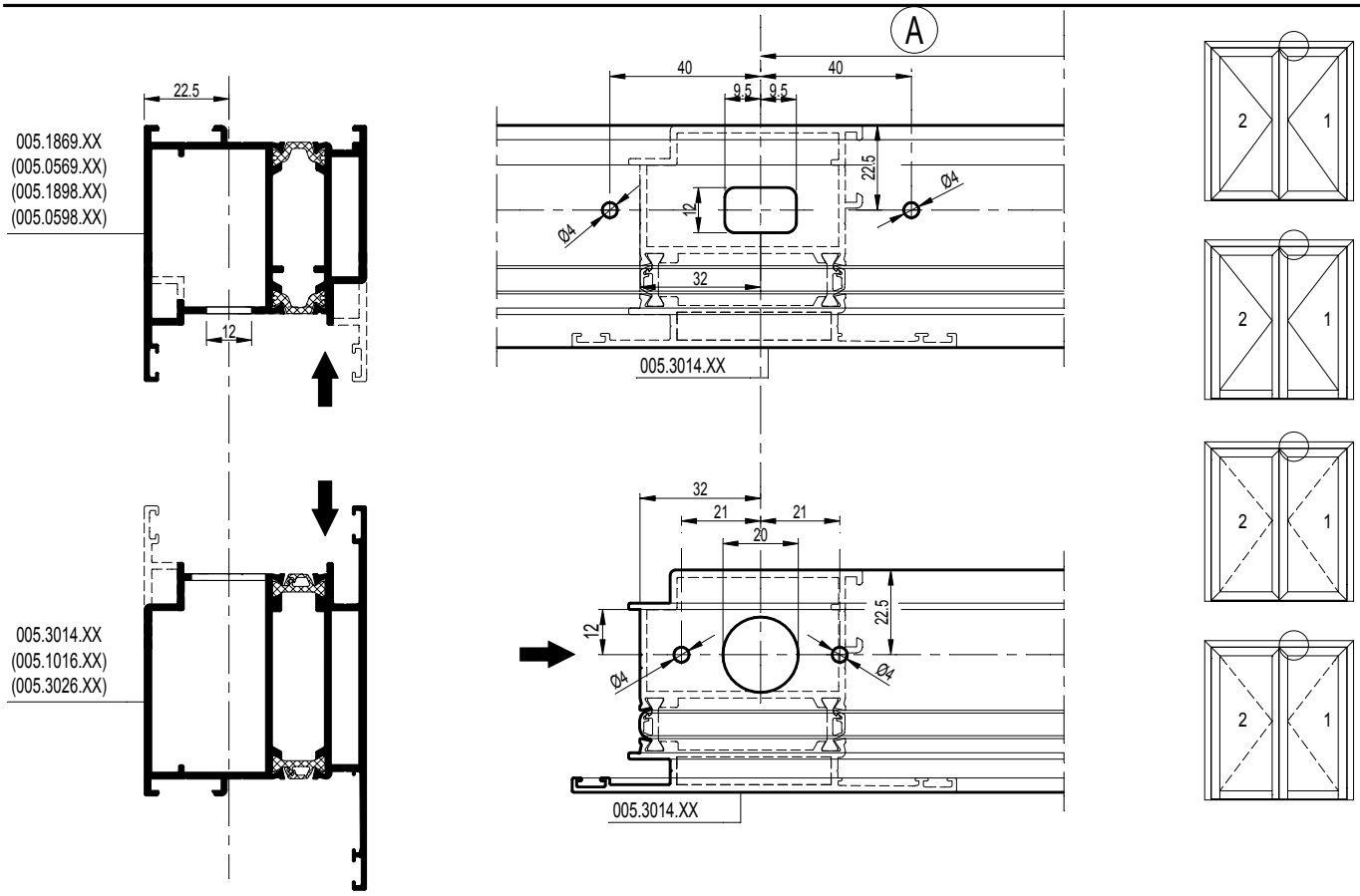

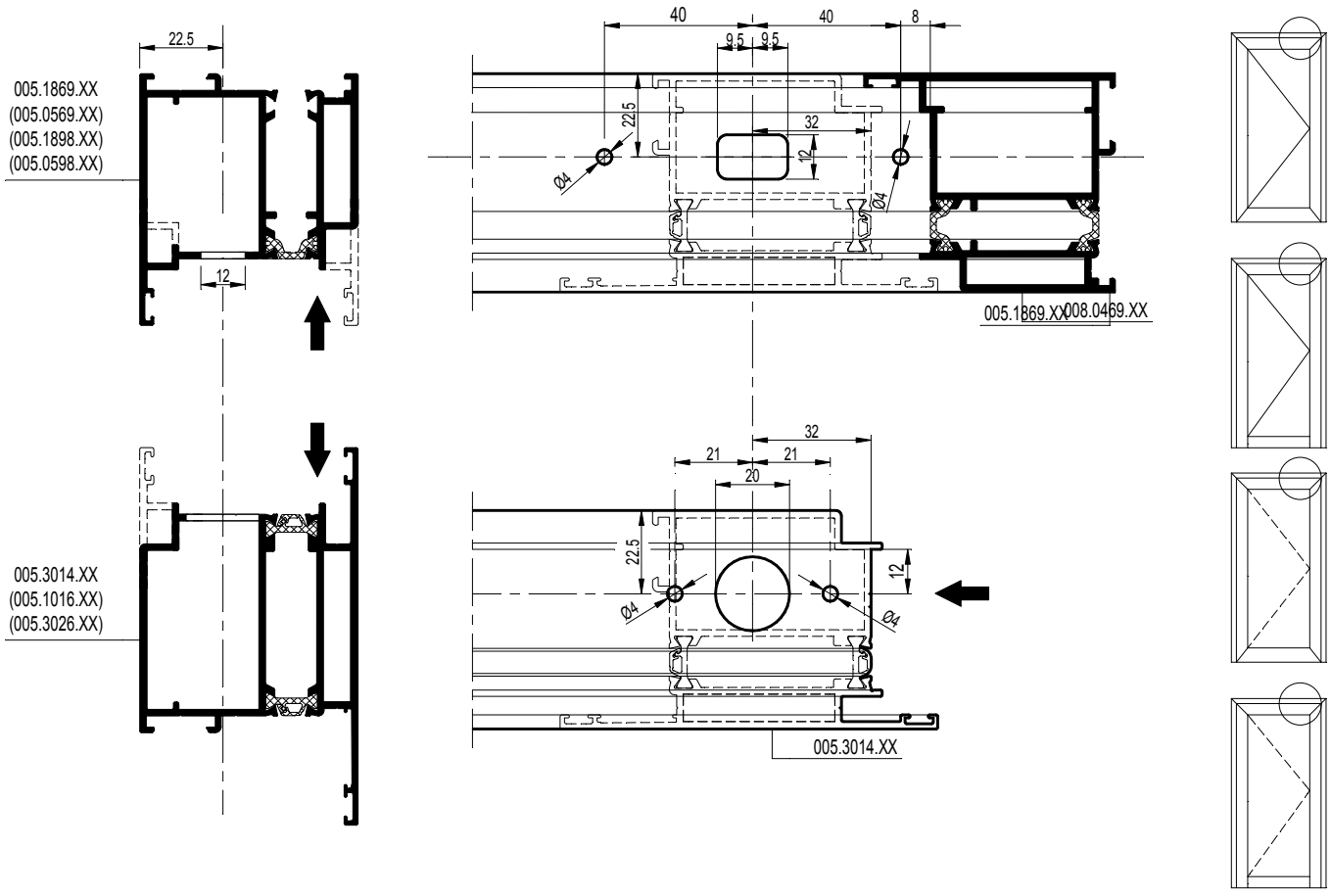

F

D0081898

UITFREZING GELEIDERS Z-T DEUR
FRAISAGE GUIDES PORTE Z-T
MILLING GUIDES Z-T DOOR
AUSFRAESUNG FUEHRUNGEN Z-T TUER

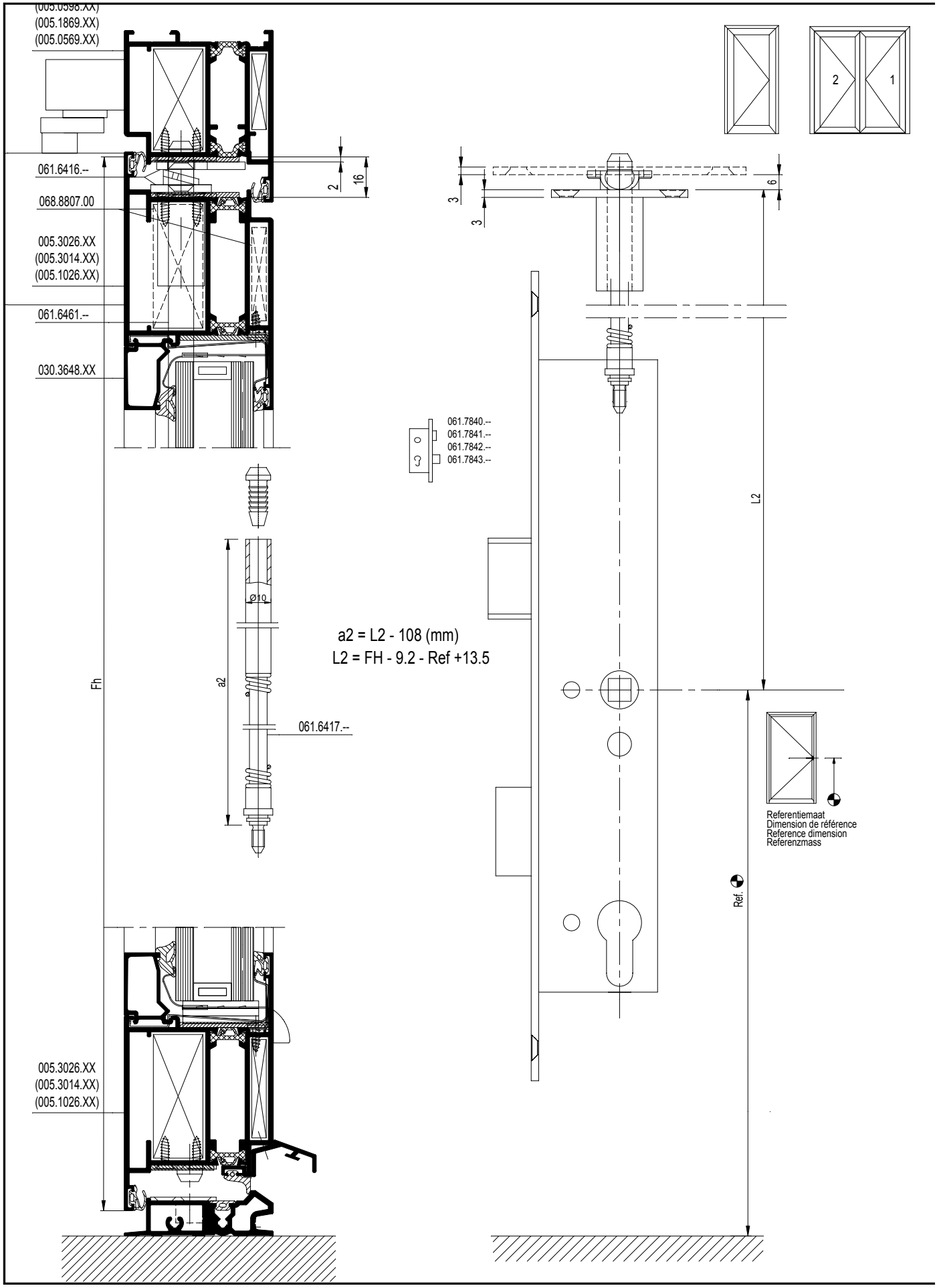

UITFREZING GELEIDERS Z-T DEUR
FRAISAGE GUIDES PORTE Z-T
MILLING GUIDES Z-T DOOR
AUSFRAESUNG FUEHRUNGEN Z-T TUER

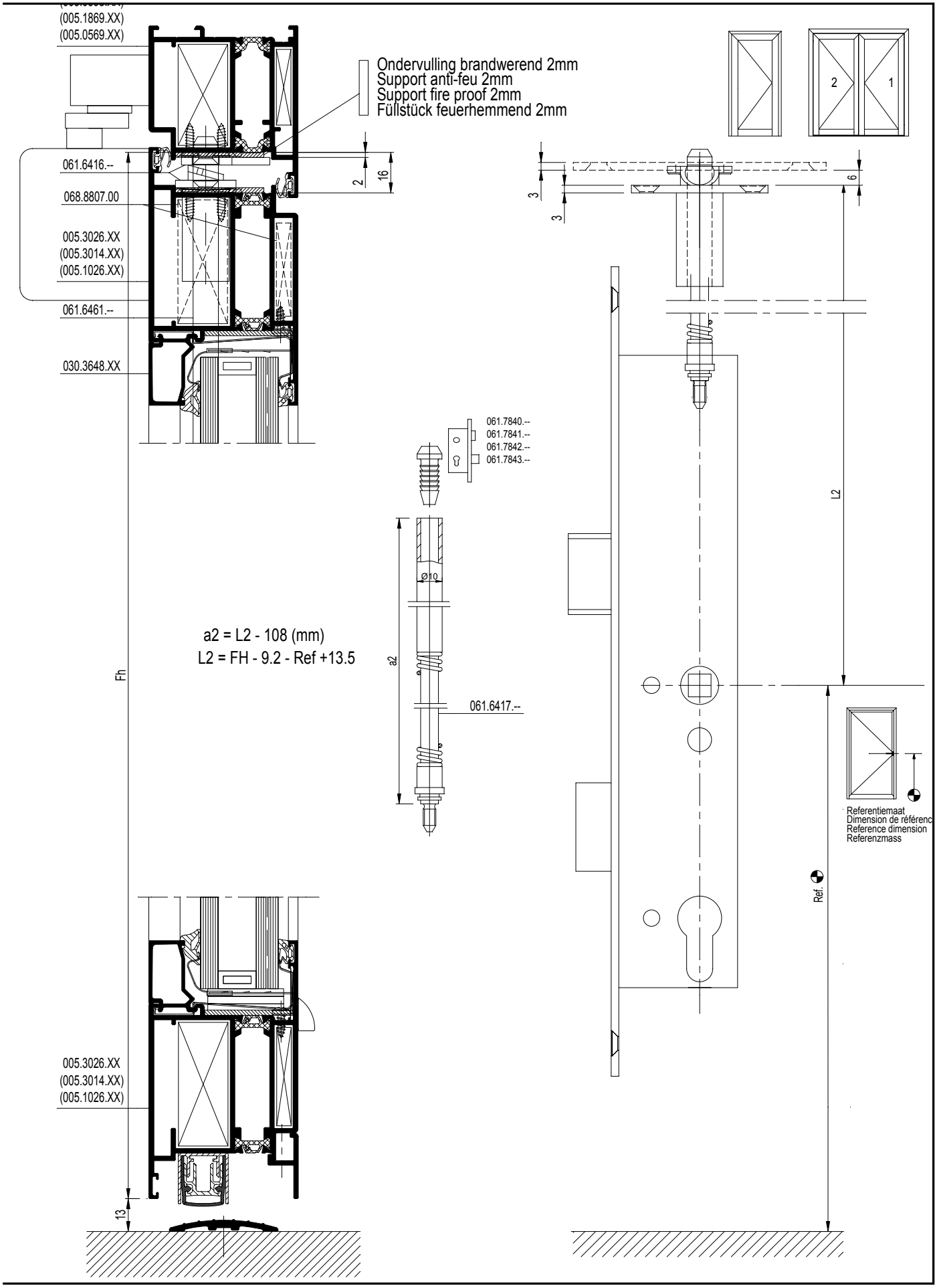

CS 68-FP
EW 30

INBOUW KANTSCHUIF RAAMDEUR
ENCASTREMENT VERROU PORTE-FENETRE
EMBEDDING LOCKING BOLT WINDOW-DOOR
EINBAU KANTRIEGEL FENSTERTUER

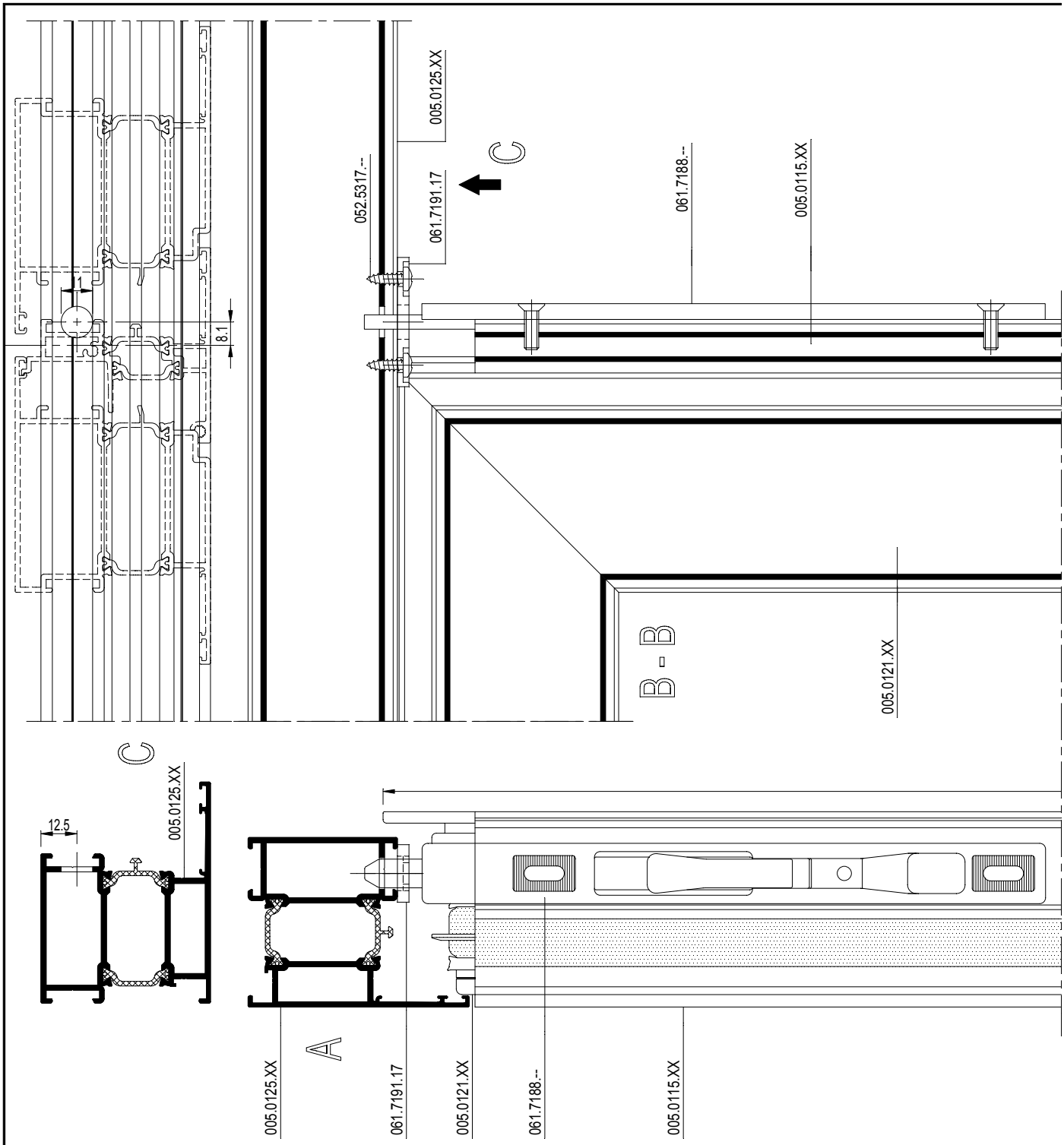

Bij gebruik van 5-puntsslot in combinatie met 2 kantschuiven (boven en onder), gelden volgende regels:
- FH moet minstens 2100 zijn.
- Krukhoogte moet minstens 1045 zijn.

En employant une fermeture à 5 points en combinaison avec 2 pênes dormant (en bas et en haut) les règles suivants sont valables :
- FH doit être au moins 2100.
- L'hauteur de la béquille doit être au moins 1045.

When using a five point lock in combination with 2 dead bolts (on top and at the bottom) following rules are valid:
- FH should be at least 2100.
- The height of the handle should be at least 1045.

Bei der Kombination einer 5-Fachverriegelung mit 2 Türkantriegeln (oben und unten) sind folgende Regeln gültig :
- FH soll mindestens 2100 sein.
- Die Drückerhöhe soll mindestens 1045 sein.

F

D0081900

INBOUW KANTSCHUIF RAAMDEUR
ENCASTREMENT VERROU PORTE-FENETRE
EMBEDDING LOCKING BOLT WINDOW-DOOR
EINBAU KANTRIEGEL FENSTERTUER

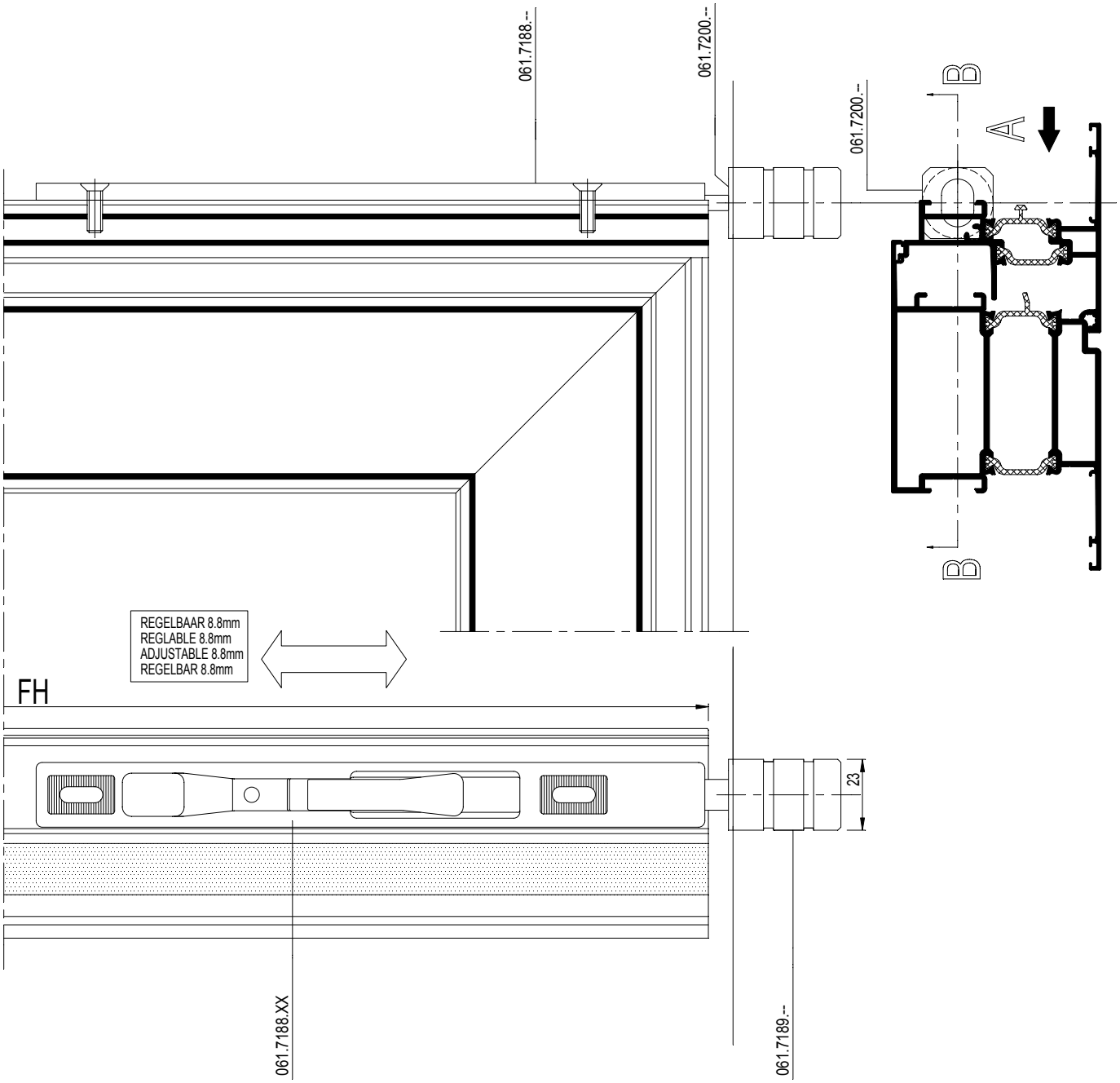

F

D0081900

OVERZICHT TOEBEHOREN TWEEDE VLEUGEL DEUREN
APERCU ACCESSOIRES 2 IEME OUVRANT PORTES
OVERVIEW ACCESSORIES SECOND VENT DOORS
UEBERSICHT ZUBEHOER STULPFLUEGELTUER

STOLPDEUR
PORTE DOUBLE
DOUBLE CASEMENT DOOR
STULPFLUEGELTUER

BESTELTABEL - TABLEAU DE COMMANDE - ORDERING TABLE - BESTELTABELLE			
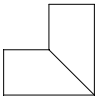	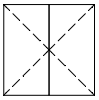		
	1 x 061.7199.-- of - ou - or - oder 1 x 061.7198.-- 2 x 050.5011.--	2 x 061.7183.-- 2 x 061.7154.-- 1 x 061.7192.--	3 x 061.7191.17 6 x 052.5317.--
	1 x 061.7199.-- of - ou - or - oder 1 x 061.7198.-- 2 x 050.5011.--	2 x 061.7183.-- 2 x 061.7154.-- 1 x 061.7192.--	3 x 061.7191.17 6 x 052.5317.--
	1 x 061.7199.-- of - ou - or - oder 1 x 061.7198.-- 2 x 050.5011.--	2 x 061.7183.-- 2 x 061.7154.-- 1 x 061.7192.--	2 x 061.7191.17 4 x 052.5317.--

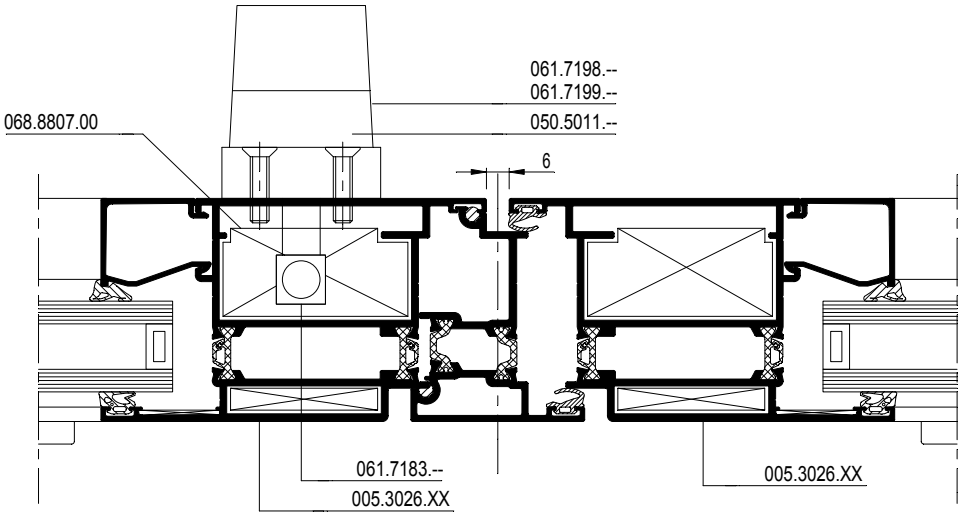

F

D0081901

OVERZICHT TOEBEHOREN TWEEDE VLEUGEL DEUREN
APERCU ACCESSOIRES 2 IEME OUVRANT PORTES
OVERVIEW ACCESSORIES SECOND VENT DOORS
UEBERSICHT ZUBEHOER STULPFLUEGELTUER

Z-T DEUR
PORTE Z-T
Z-T DOOR
Z-T TUER

BESTELTABEL - TABLEAU DE COMMANDE - ORDERING TABLE - BESTELTABELLE			
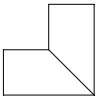	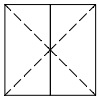		
	1 x 061.7199.-- of - ou - or - oder 1 x 061.7198.-- 2 x 050.5011.--	2 x 061.7183.-- 2 x 061.7154.-- 1 x 061.7192.--	3 x 061.7191.17 6 x 052.5317.--
	1 x 061.7199.-- of - ou - or - oder 1 x 061.7198.-- 2 x 050.5011.--	2 x 061.7183.-- 2 x 061.7154.-- 1 x 061.7192.--	3 x 061.7191.17 6 x 052.5317.--
	1 x 061.7199.-- of - ou - or - oder 1 x 061.7198.-- 2 x 050.5011.--	2 x 061.7183.-- 2 x 061.7154.-- 1 x 061.7192.--	2 x 061.7191.17 4 x 052.5317.--

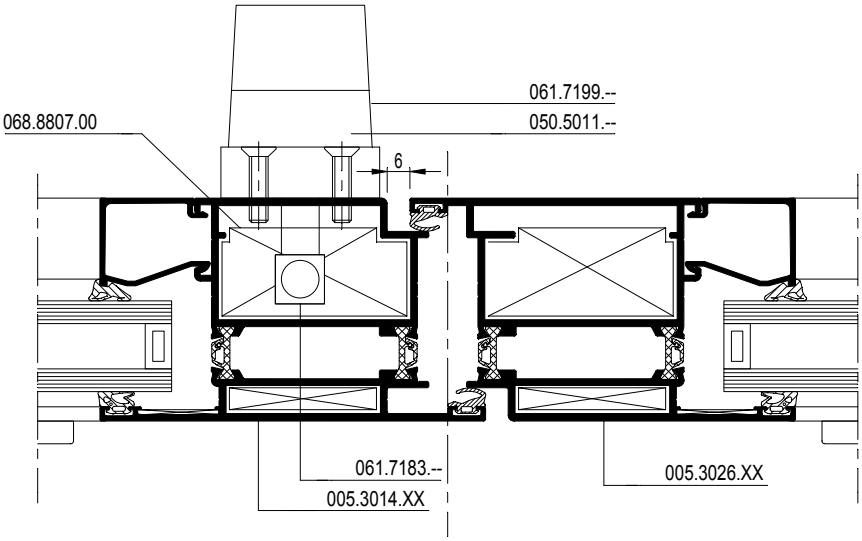

F

D0081901

OVERZICHT TOEBEHOREN TWEEDE VLEUGEL DEUREN
APERCU ACCESSOIRES 2 IEME OUVRANT PORTES
OVERVIEW ACCESSORIES SECOND VENT DOORS
UEBERSICHT ZUBEHOER STULPFLUEGELTUER

STOLPDEUR
PORTE DOUBLE
DOUBLE CASEMENT DOOR
STULPFLUEGELTUER

BESTELTABEL - TABLEAU DE COMMANDE - ORDERING TABLE - BESTELTABELLE			
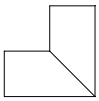	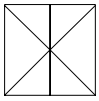		
	1 x 061.7199.-- of - ou - or - oder 1 x 061.7198.-- 2 x 050.5011.--	2 x 061.7183.-- 2 x 061.7154.-- 1 x 061.7192.--	2 x 061.7191.17 4 x 052.5317.--
	1 x 061.7199.-- of - ou - or - oder 1 x 061.7198.-- 2 x 050.5011.--	2 x 061.7183.-- 2 x 061.7154.-- 1 x 061.7192.--	2 x 061.7191.17 4 x 052.5317.--
	1 x 061.7199.-- of - ou - or - oder 1 x 061.7198.-- 2 x 050.5011.--	2 x 061.7183.-- 2 x 061.7154.-- 1 x 061.7192.--	2 x 061.7191.17 4 x 052.5317.--

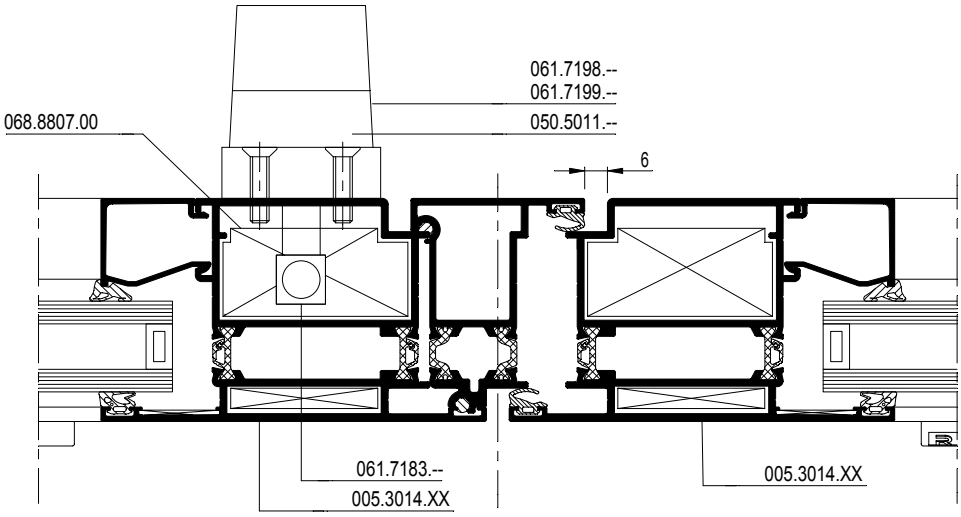

D0081902

Z-T DEUR
PORTE Z-T
Z-T DOOR
Z-T TUER

BESTELTABEL - TABLEAU DE COMMANDE - ORDERING TABLE - BESTELTABELLE			
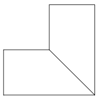	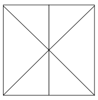		
	1 x 061.7199.-- of - ou - or - oder 1 x 061.7198.-- 2 x 050.5011.--	2 x 061.7183.-- 2 x 061.7154.-- 1 x 061.7192.--	2 x 061.7191.17 4 x 052.5317.--
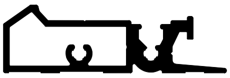	1 x 061.7199.-- of - ou - or - oder 1 x 061.7198.-- 2 x 050.5011.--	2 x 061.7183.-- 2 x 061.7154.-- 1 x 061.7192.--	2 x 061.7191.17 4 x 052.5317.--
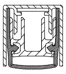	1 x 061.7199.-- of - ou - or - oder 1 x 061.7198.-- 2 x 050.5011.--	2 x 061.7183.-- 2 x 061.7154.-- 1 x 061.7192.--	2 x 061.7191.17 4 x 052.5317.--

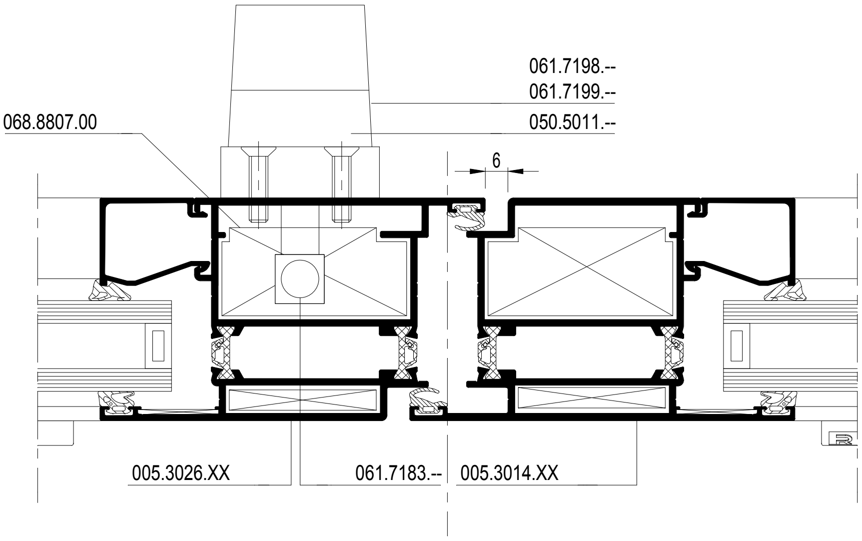

CS 68-FP
EW 30

INBOUW STANGENSLOT
ENCASTREMENT SERRURE A TIGE
EMBEDDING BAR LOCK
EINBAU TUERTREIBRIEGEL

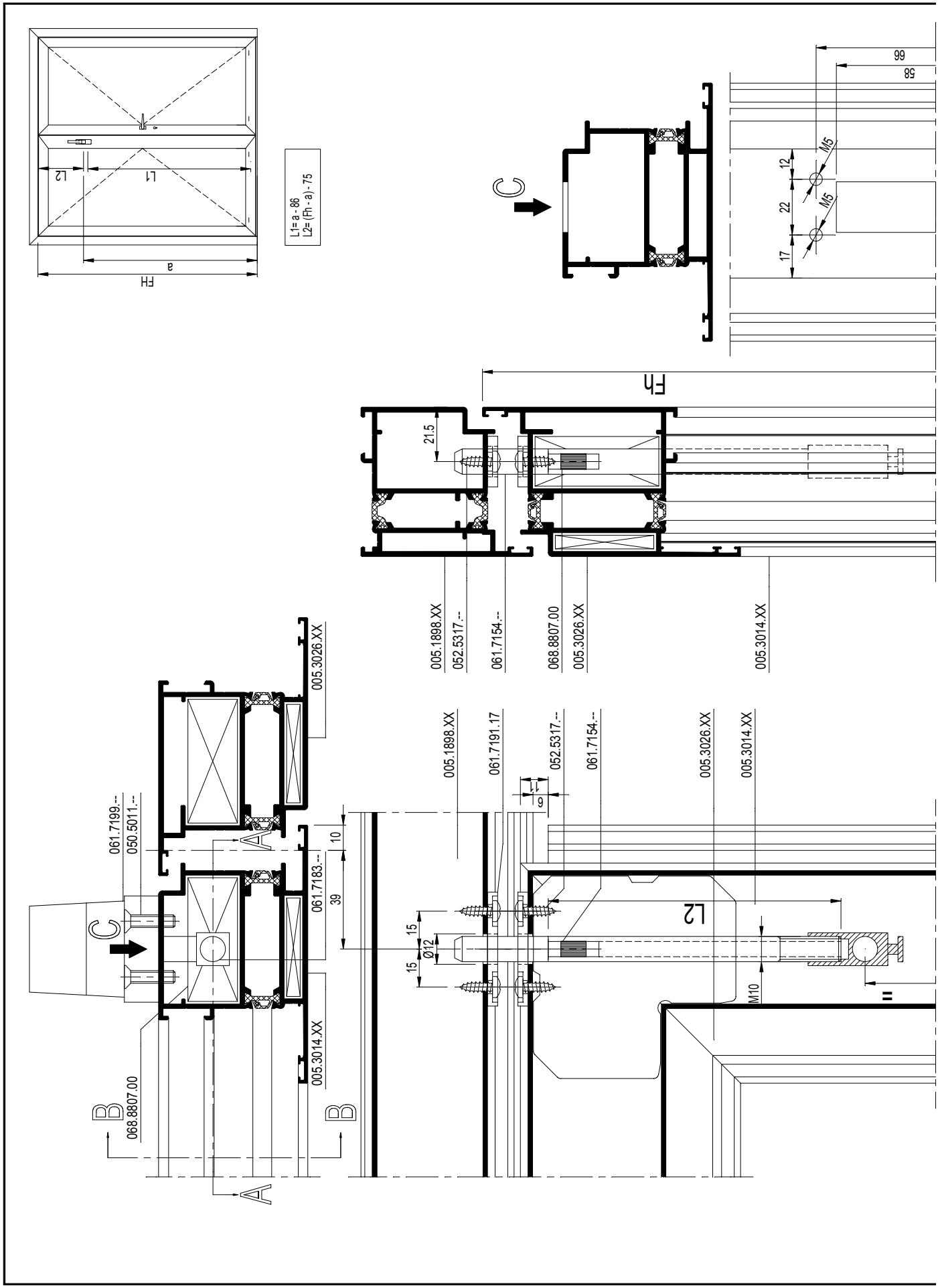

F

CS 68-FP
EW 30

INBOUW STANGENSLOT
ENCASTREMENT SERRURE A TIGE
EMBEDDING BAR LOCK
EINBAU TUERTREIBRIEGEL

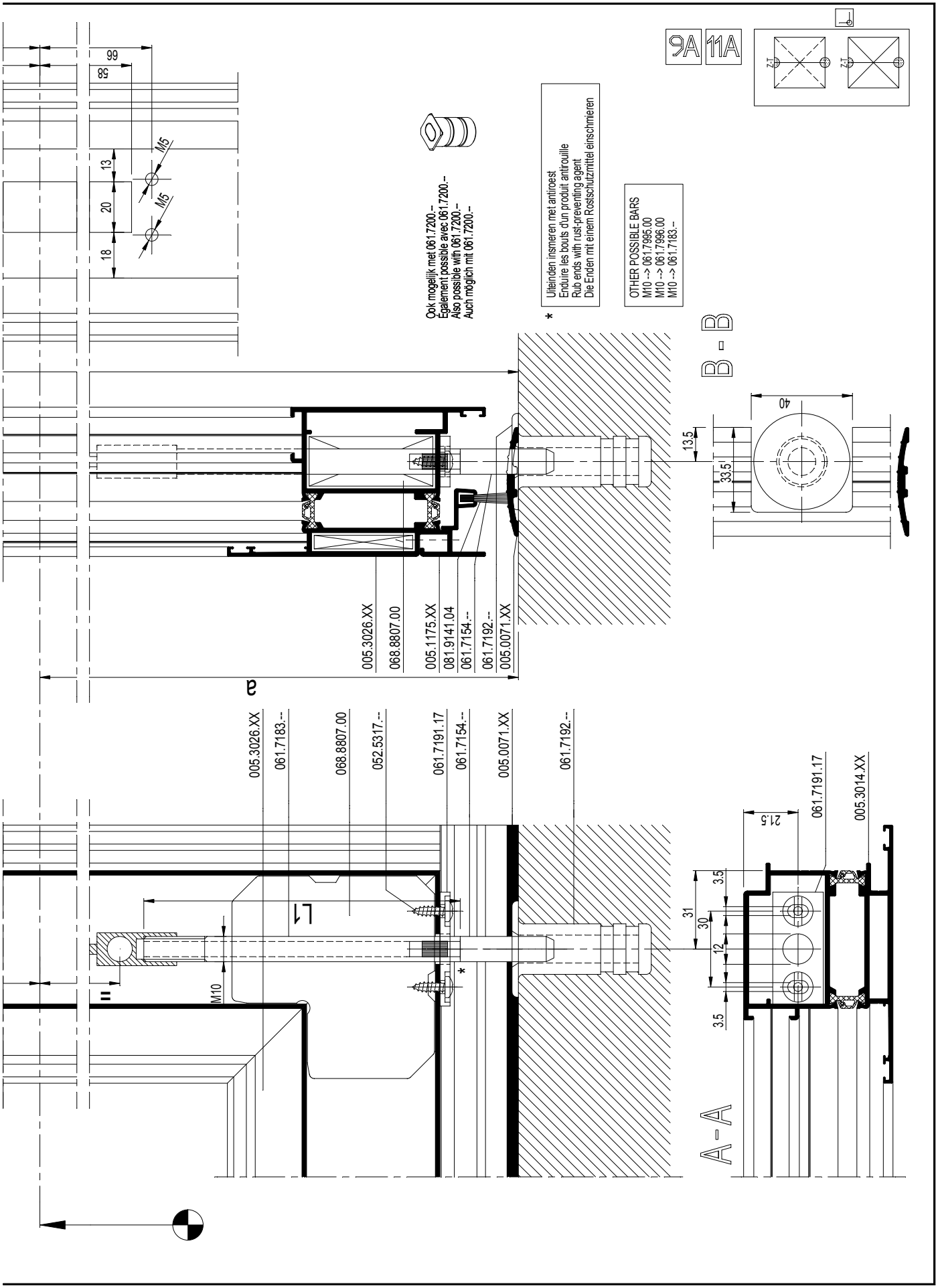

D0081903

F

CS 68-FP
EW 30

INBOUW STANGENSLOT
ENCASTREMENT SERRURE A TIGE
EMBEDDING BAR LOCK
EINBAU TUERTREIBRIEGEL

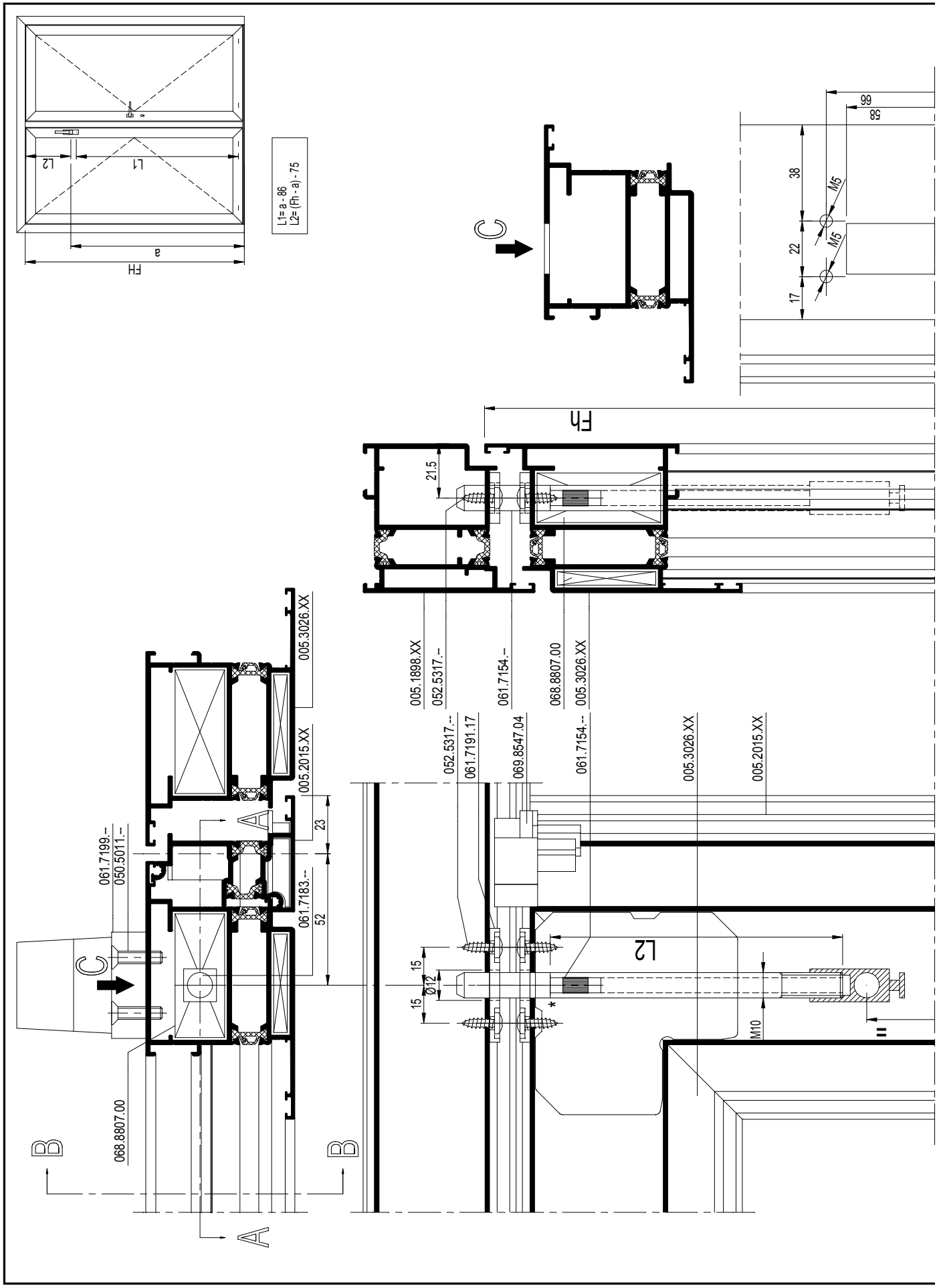

D0081904

F

CS 68-FP
EW 30

INBOUW STANGENSLOT
ENCASTREMENT SERRURE A TIGE
EMBEDDING BAR LOCK
EINBAU TUERTREIBRIEGEL

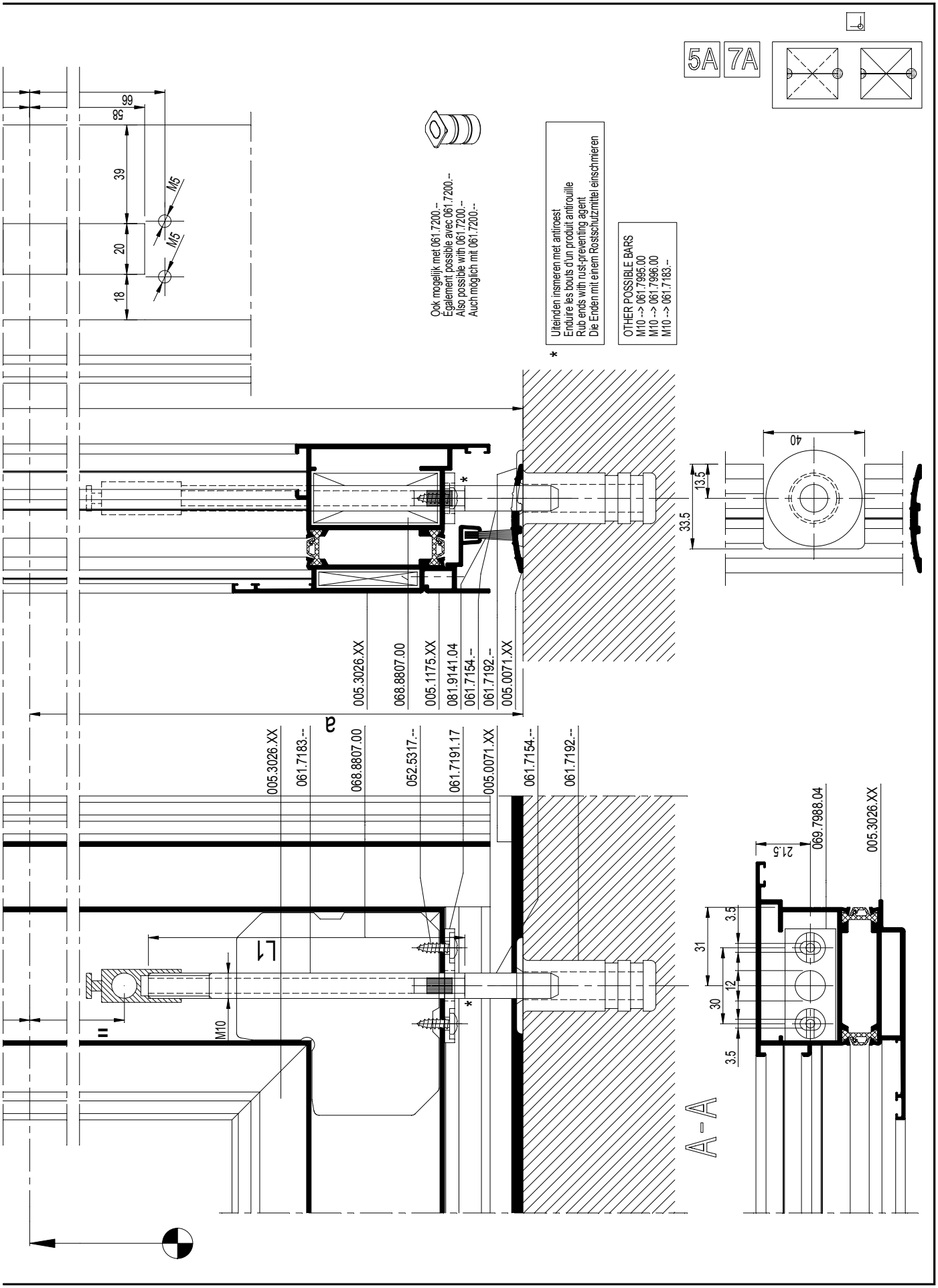

D0081904

F

CS 68-FP
EW 30

INBOUW STANGENSLOT
ENCASTREMENT SERRURE A TIGE
EMBEDDING BAR LOCK
EINBAU TUERTREIBRIEGEL

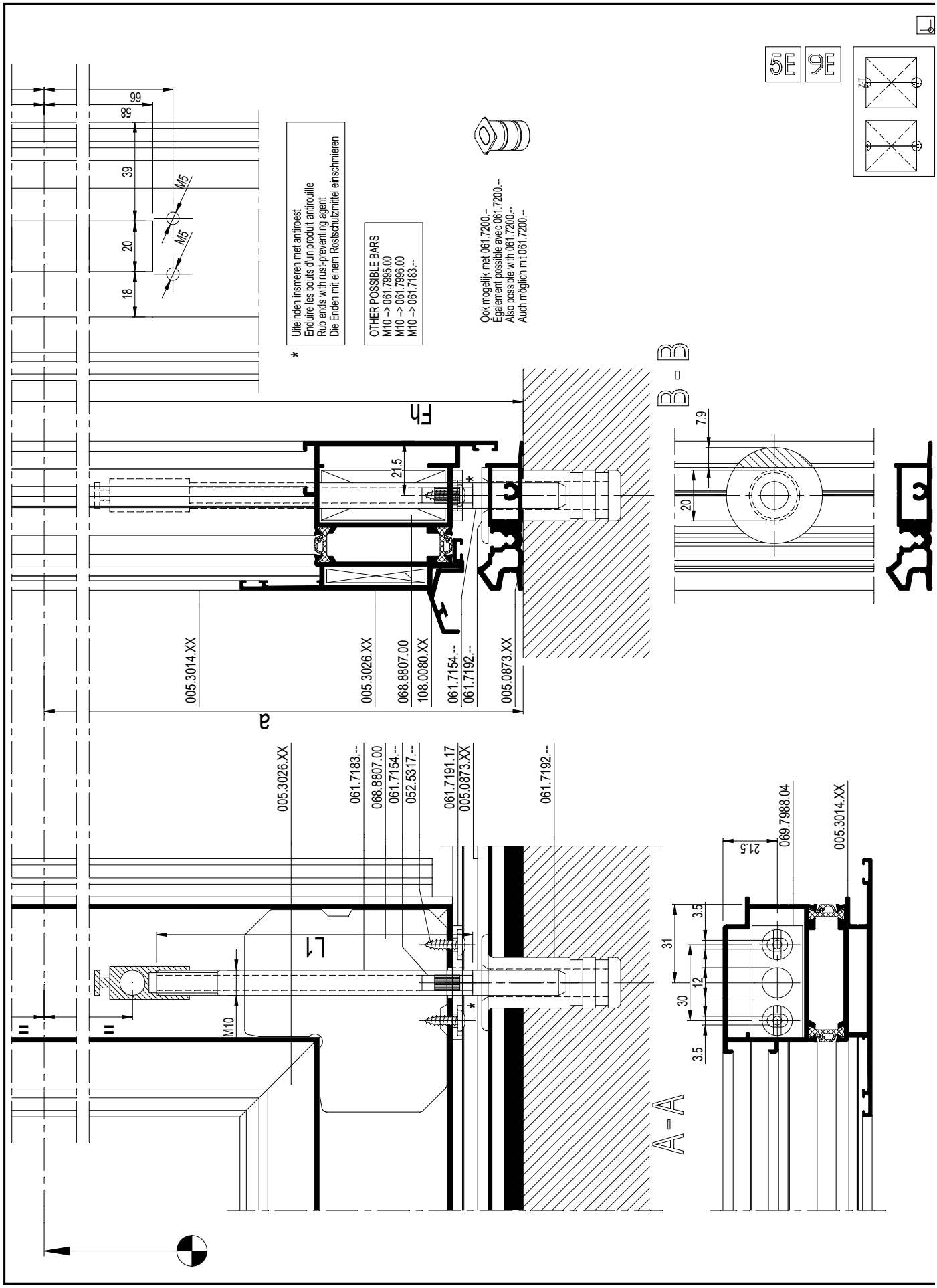

CS 68-FP
EW 30

INBOUW STANGENSLOT
ENCASTREMENT SERRURE A TIGE
EMBEDDING BAR LOCK
EINBAU TUERTREIBRIEGEL

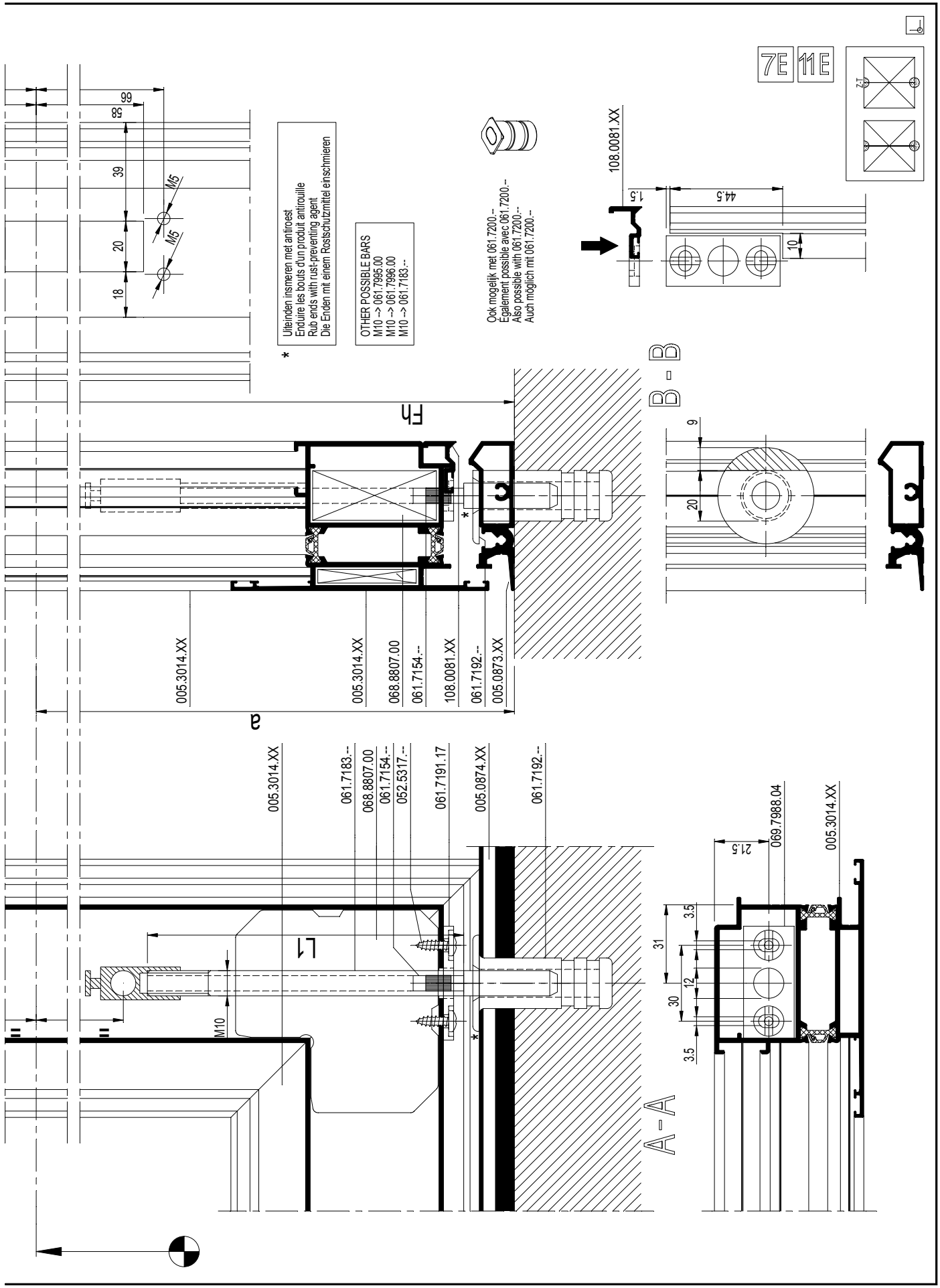

F

OVERZICHT TOEBEHOREN TWEEDE VLEUGEL DEUREN
APERCU ACCESSOIRES 2 IEME OUVRANT PORTES
OVERVIEW ACCESSORIES SECOND VENT DOORS
UEBERSICHT ZUBEHOER STULPFLUEGELTUER

STOLPDEUR
PORTE DOUBLE
DOUBLE CASEMENT DOOR
STULPFLUEGELTUER

BESTELTABEL - TABLEAU DE COMMANDE - ORDERING TABLE - BESTELTABELLE			
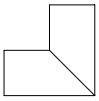	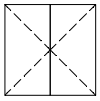		
	1 x 061.7151.-- 2 x 052.5331.-- 5 x 061.7152.--	8 x 052.5308.-- 2 x 061.7154.--	1 x 061.7155.-- 1 x 061.7156.--
	1 x 061.7151.-- 2 x 052.5331.-- 4 x 061.7152.--	8 x 052.5308.-- 2 x 061.7154.--	1 x 061.7155.-- 1 x 061.7156.--
	1 x 061.7151.-- 2 x 052.5331.-- 4 x 061.7152.--	6 x 052.5308.-- 2 x 061.7154.--	1 x 061.7155.-- 1 x 061.7156.--

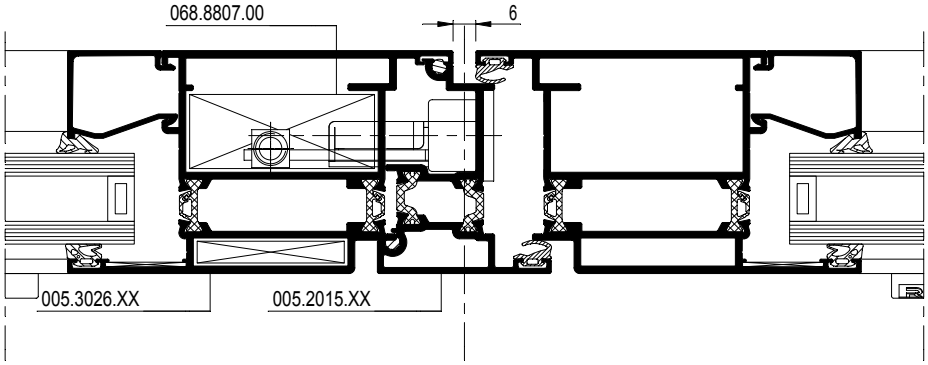

F

D0081909

OVERZICHT TOEBEHOREN TWEEDE VLEUGEL DEUREN
APERCU ACCESSOIRES 2 IEME OUVRANT PORTES
OVERVIEW ACCESSORIES SECOND VENT DOORS
UEBERSICHT ZUBEHOER STULPFLUEGELTUER

Z-T DEUR
PORTE Z-T
Z-T DOOR
Z-T TUER

BESTELTABEL - TABLEAU DE COMMANDE - ORDERING TABLE - BESTELTABELLE			
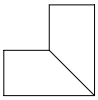	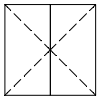		
	1 x 061.7150.-- 2 x 050.5331.-- 5 x 061.7152.--	8 x 052.5308.-- 2 x 061.7154.--	1 x 061.7155.-- 1 x 061.7156.--
	1 x 061.7150.-- 2 x 052.5331.-- 4 x 061.7152.--	8 x 052.5308.-- 2 x 061.7154.--	1 x 061.7155.-- 1 x 061.7156.--
	1 x 061.7150.-- 2 x 052.5331.-- 4 x 061.7152.--	6 x 052.5308.-- 2 x 061.7154.--	1 x 061.7155.-- 1 x 061.7156.--

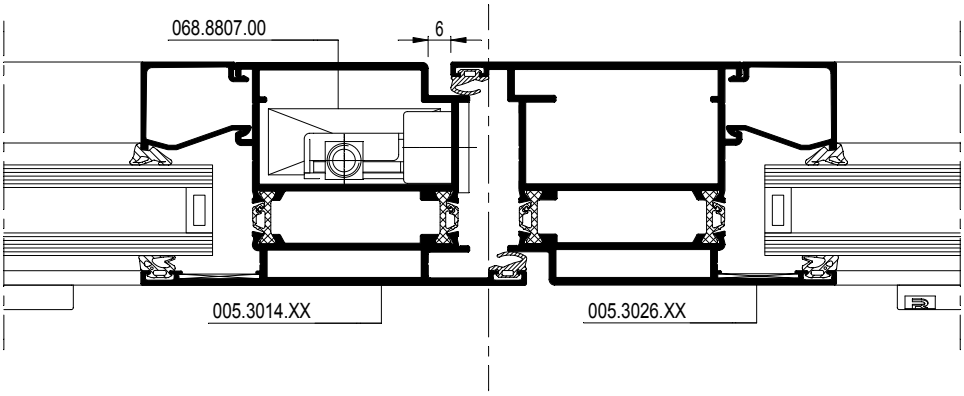

F

D0081909

OVERZICHT TOEBEHOREN TWEEDE VLEUGEL DEUREN
APERCU ACCESSOIRES 2 IEME OUVRANT PORTES
OVERVIEW ACCESSORIES SECOND VENT DOORS
UEBERSICHT ZUBEHOER STULPFLUEGELTUER

STOLPDEUR
PORTE DOUBLE
DOUBLE CASEMENT DOOR
STULPFLUEGELTUER

BESTELTABEL - TABLEAU DE COMMANDE - ORDERING TABLE - BESTELTABELLE			
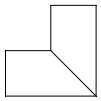	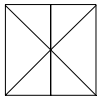		
	1 x 061.7151.-- 2 x 052.5331.-- 4 x 061.7152.--	6 x 052.5308.-- 2 x 061.7154.--	1 x 061.7155.-- 1 x 061.7156.--
	1 x 061.7151.-- 2 x 052.5331.-- 3 x 061.7152.--	6 x 052.5308.-- 2 x 061.7154.--	1 x 061.7155.-- 1 x 061.7156.--
	1 x 061.7151.-- 2 x 052.5331.-- 4 x 061.7152.--	6 x 052.5308.-- 2 x 061.7154.--	1 x 061.7155.-- 1 x 061.7156.--

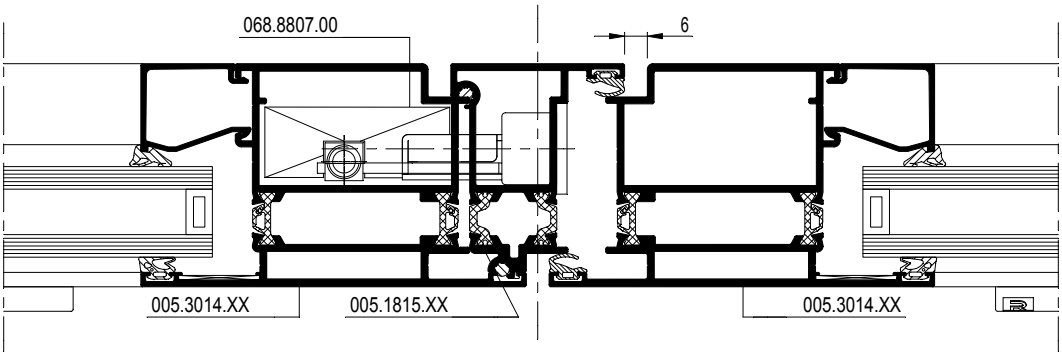

F

D0081910

OVERZICHT TOEBEHOREN TWEEDE VLEUGEL DEUREN
APERCU ACCESSOIRES 2 IEME OUVRANT PORTES
OVERVIEW ACCESSORIES SECOND VENT DOORS
UEBERSICHT ZUBEHOER STULPFLUEGELTUER

Z-T DEUR
PORTE Z-T
Z-T DOOR
Z-T TUER

BESTELTABEL - TABLEAU DE COMMANDE - ORDERING TABLE - BESTELTABELLE			
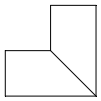	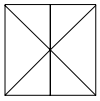		
	1 x 061.7150.-- 2 x 050.5331.-- 4 x 061.7152.--	6 x 052.5308.-- 2 x 061.7154.--	1 x 061.7155.-- 1 x 061.7156.--
	1 x 061.7150.-- 2 x 052.5331.-- 3 x 061.7152.--	6 x 052.5308.-- 2 x 061.7154.--	1 x 061.7155.-- 1 x 061.7156.--
	1 x 061.7150.-- 2 x 052.5331.-- 4 x 061.7152.--	6 x 052.5308.-- 2 x 061.7154.--	1 x 061.7155.-- 1 x 061.7156.--

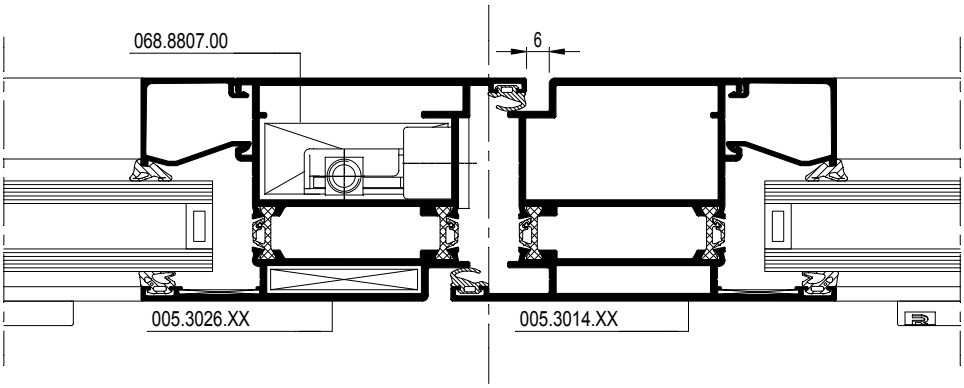

F

D0081910

INBOUW ESPAGNOLETSLOT
ENCASTREMENT FERMETURE ESPAGNOLETTE
EMBEDDING ESPAGNOLETTE LOCK
EINBAU FALZTREIBRIEGEL

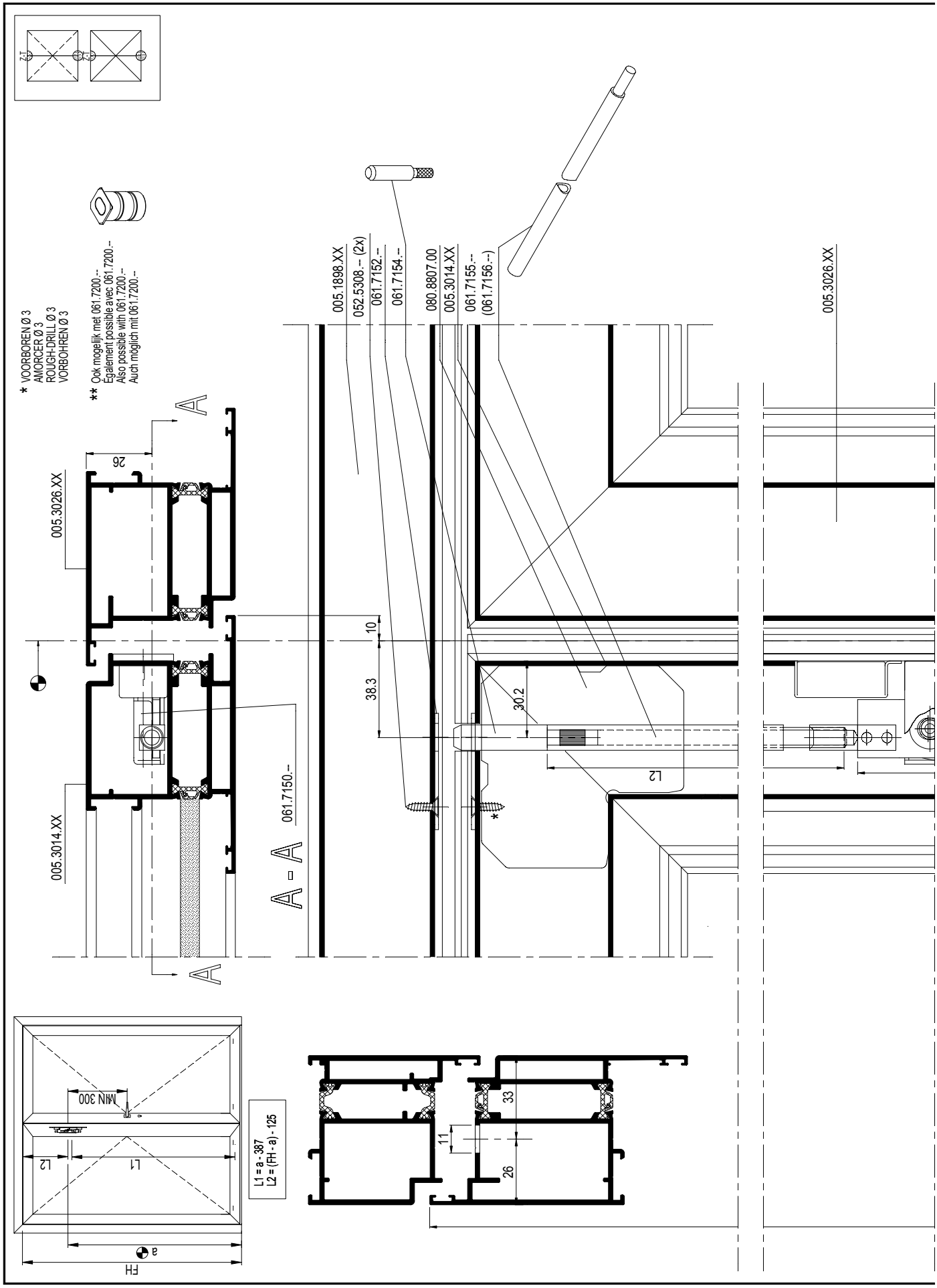

F

CS 68-FP
EW 30

INBOUW ESPAGNOLETSLOT
ENCASTREMENT FERMETURE ESPAGNOLETTE
EMBEDDING ESPAGNOLETTE LOCK
EINBAU FALZTREIBRIEGEL

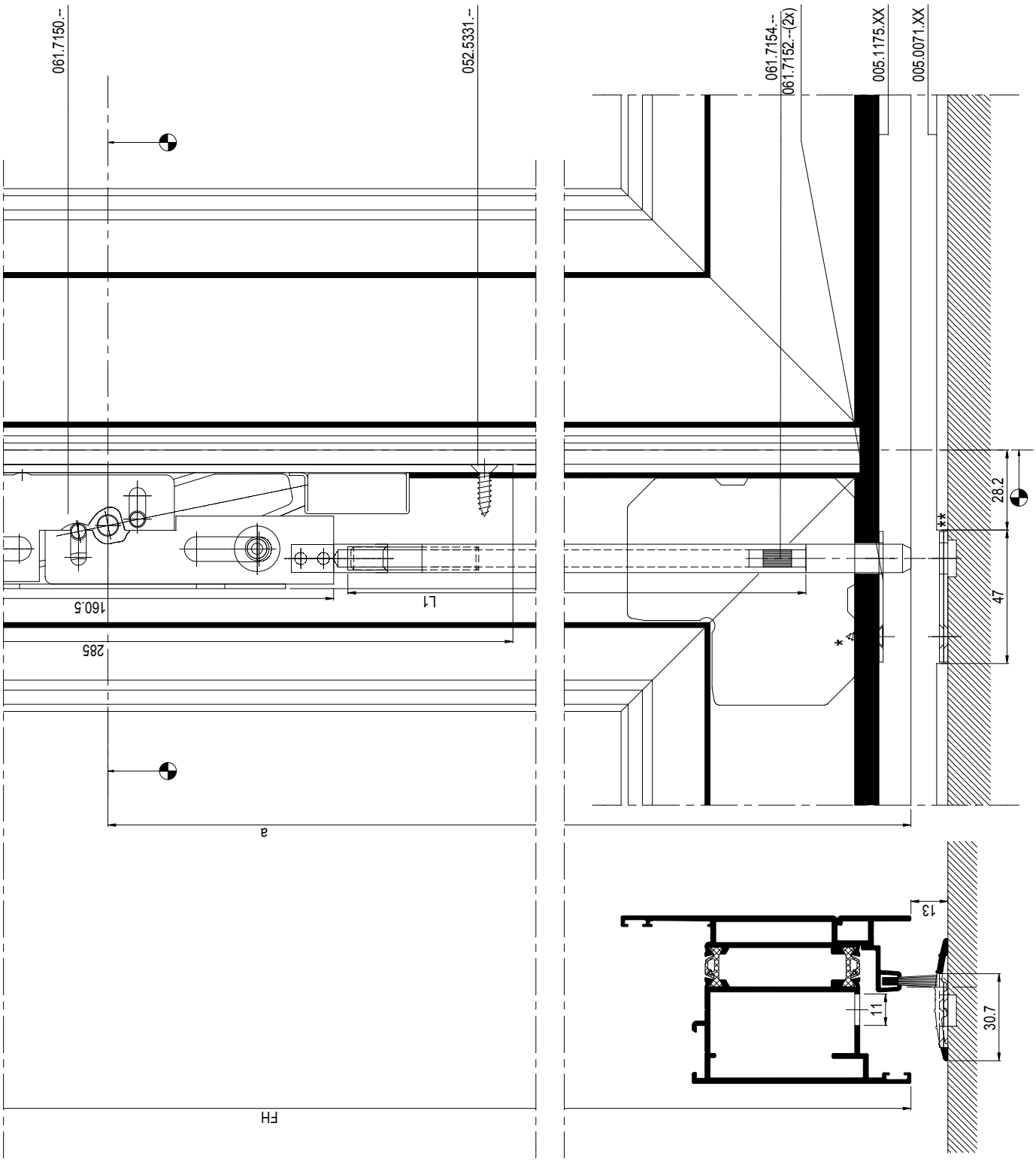

F

INBOUW ESPAGNOLETSLOT
ENCASTREMENT FERMETURE ESPAGNOLETTE
EMBEDDING ESPAGNOLETTE LOCK
EINBAU FALZTREIBRIEGEL

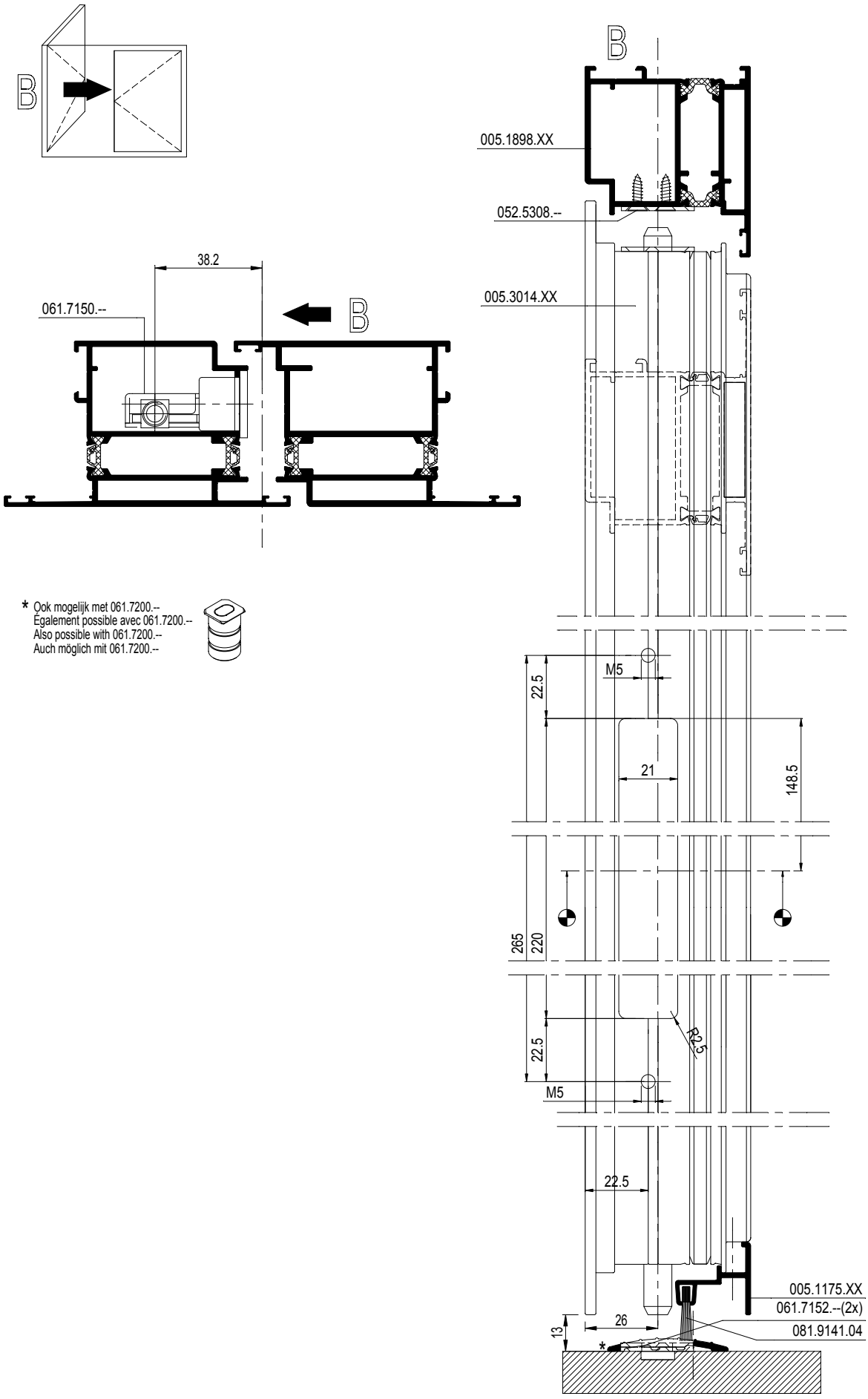

* Ook mogelijk met 061.7200.--
Également possible avec 061.7200.--
Also possible with 061.7200.--
Auch möglich mit 061.7200.--

D0081912

CS 68-FP
EW 30

INBOUW ESPAGNOLETSLOT
ENCASTREMENT FERMETURE ESPAGNOLETTE
EMBEDDING ESPAGNOLETTE LOCK
EINBAU FALZTREIBRIEGEL

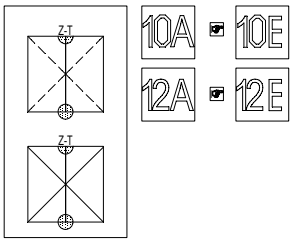

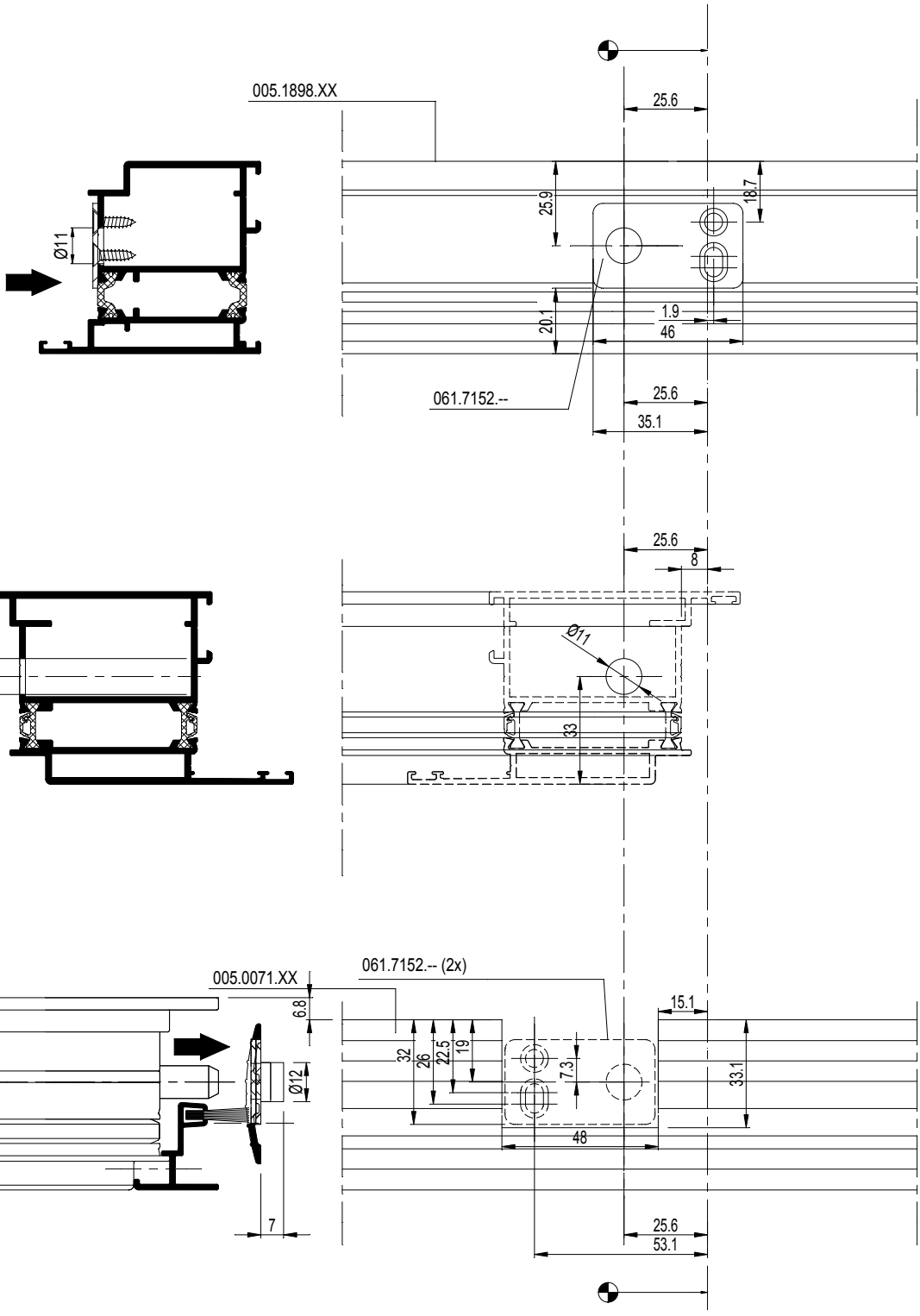

F

D0081912

INBOUW ESPAGNOLETSLOT
ENCASTREMENT FERMETURE ESPAGNOLETTE
EMBEDDING ESPAGNOLETTE LOCK
EINBAU FALZTREIBRIEGEL

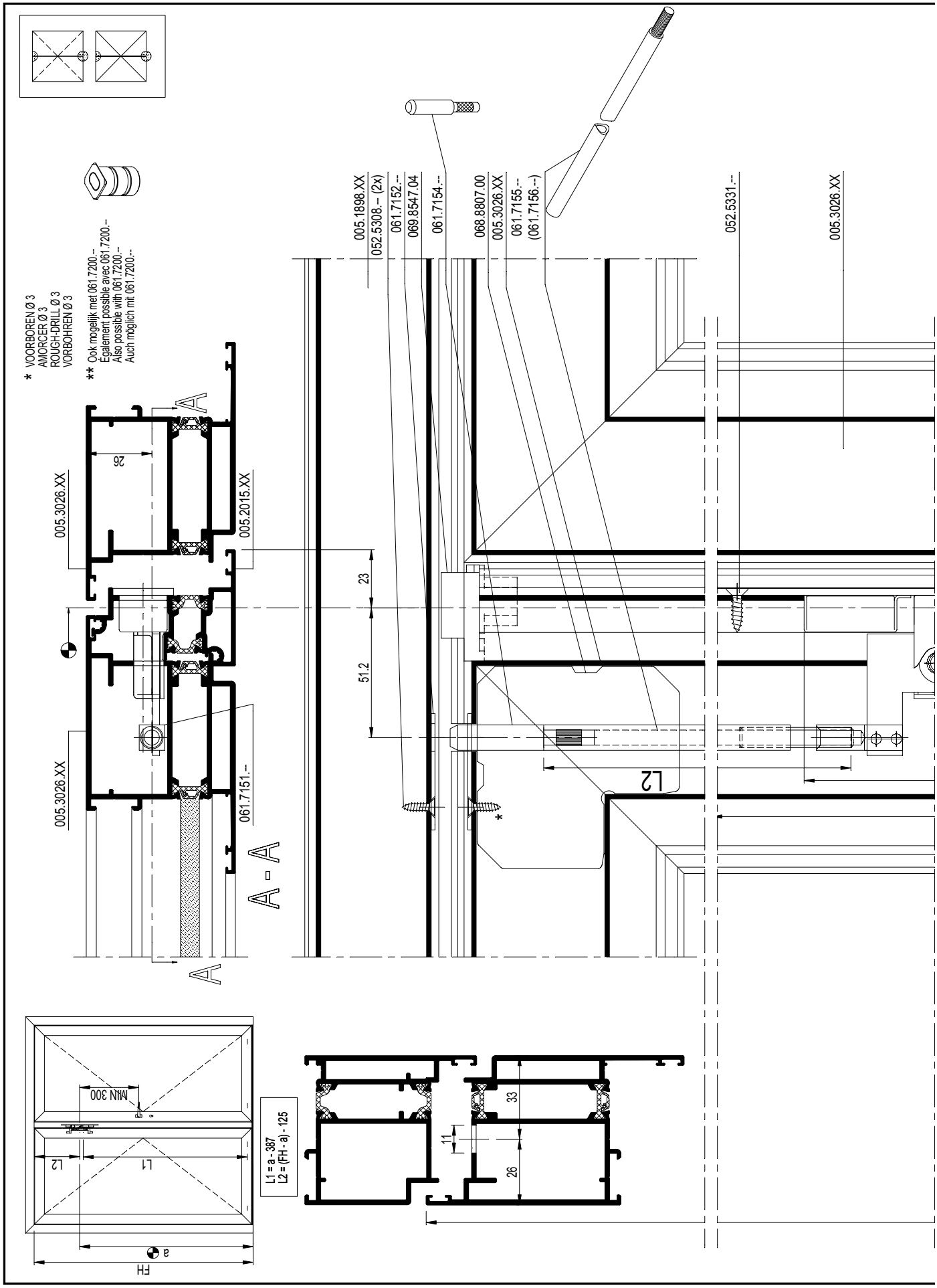

F

INBOUW ESPAGNOLETSLOT
ENCASTREMENT FERMETURE ESPAGNOLETTE
EMBEDDING ESPAGNOLETTE LOCK
EINBAU FALZTREIBRIEGEL

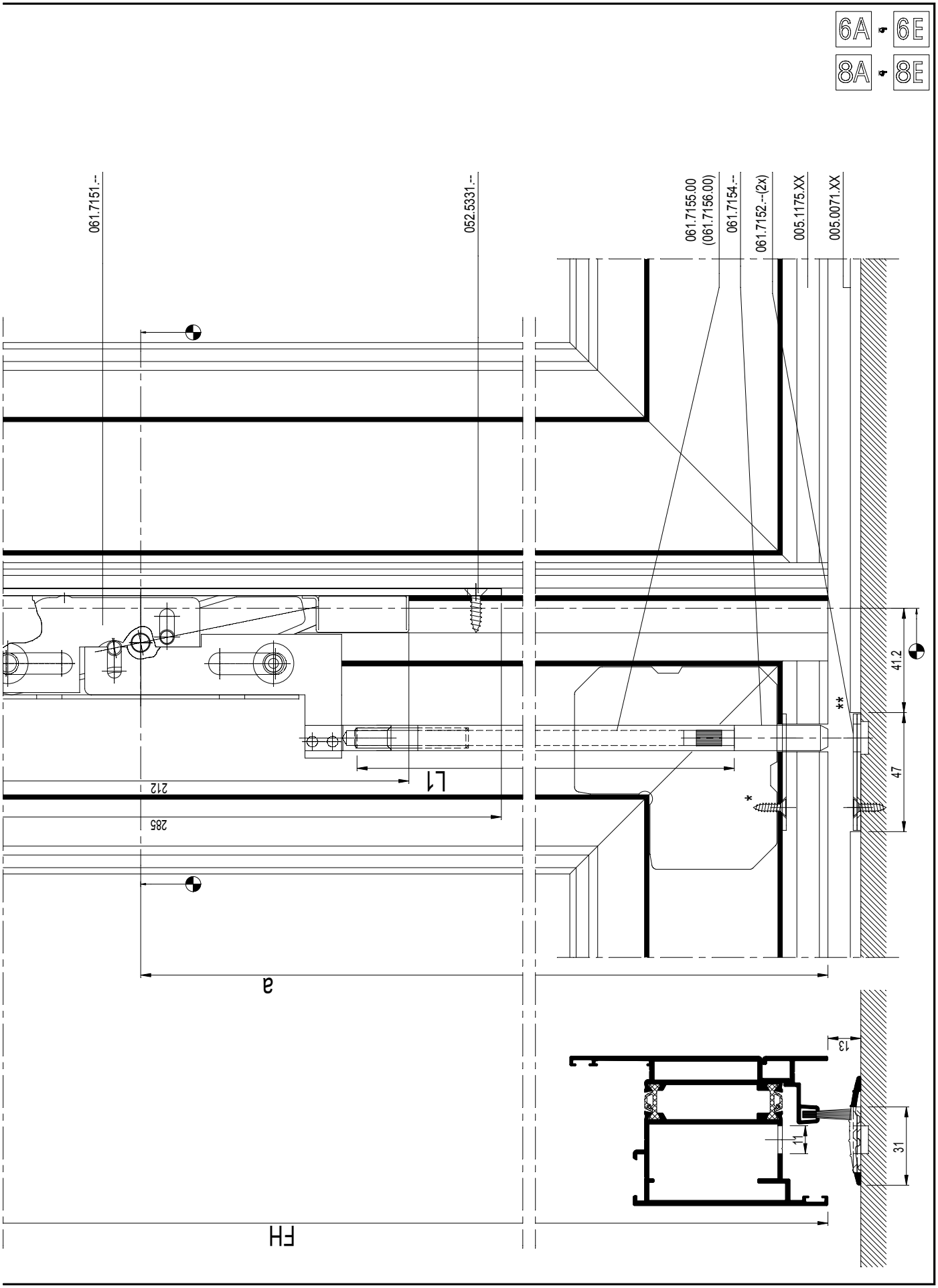

CS 68-FP
EW 30

INBOUW ESPAGNOLETSLOT
ENCASTREMENT FERMETURE ESPAGNOLETTE
EMBEDDING ESPAGNOLETTE LOCK
EINBAU FALZTREIBRIEGEL

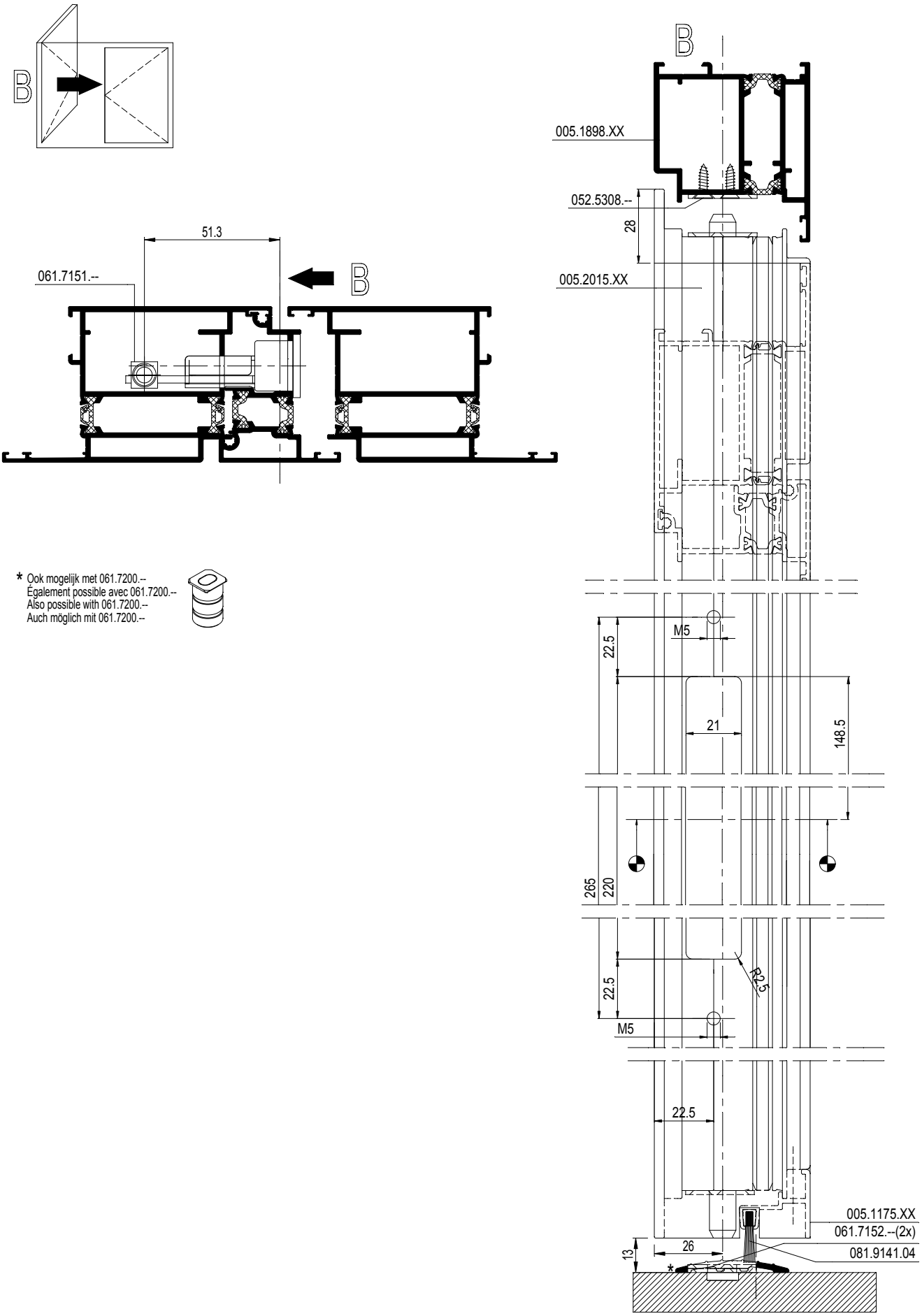

* Ook mogelijk met 061.7200.--
Également possible avec 061.7200.--
Also possible with 061.7200.--
Auch möglich mit 061.7200.--

F

INBOUW ESPAGNOLETSLOT
ENCASTREMENT FERMETURE ESPAGNOLETTE
EMBEDDING ESPAGNOLETTE LOCK
EINBAU FALZTREIBRIEGEL

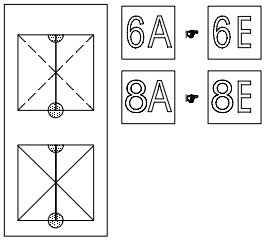

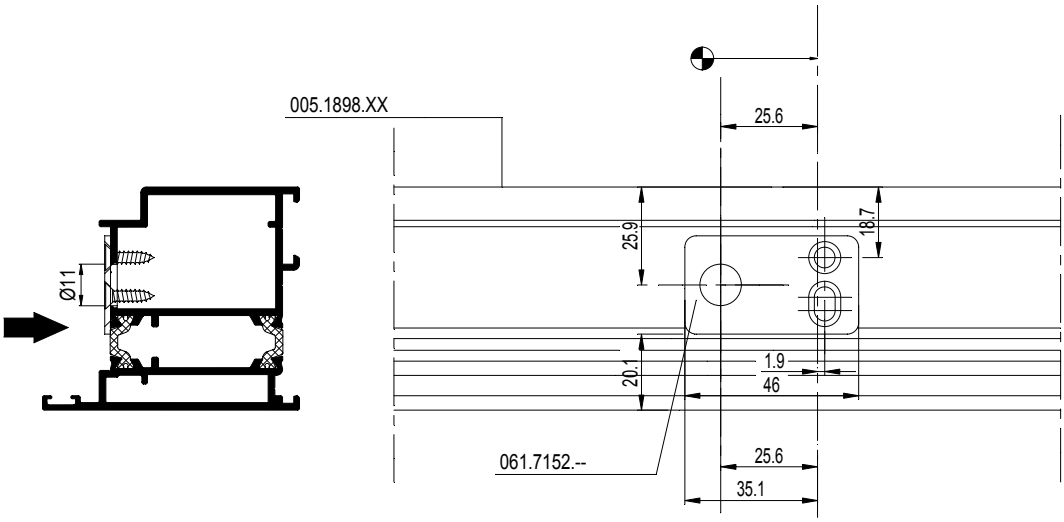

UITFREZEN VLEUGELPROFIEL
(GELEIDING STANG)
FRAISAGE PROFILE D'OUVRANT
(GUIDAGE BARRE)
MILLING VENT PROFILE
(GUIDANCE BAR)
AUSFRAESUNG FLUEGELPROFIL
(FUEHRUNG STANGE)

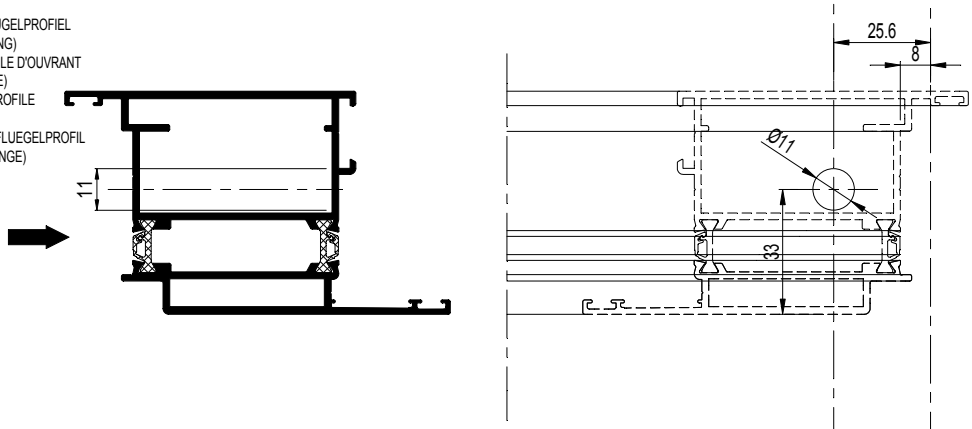

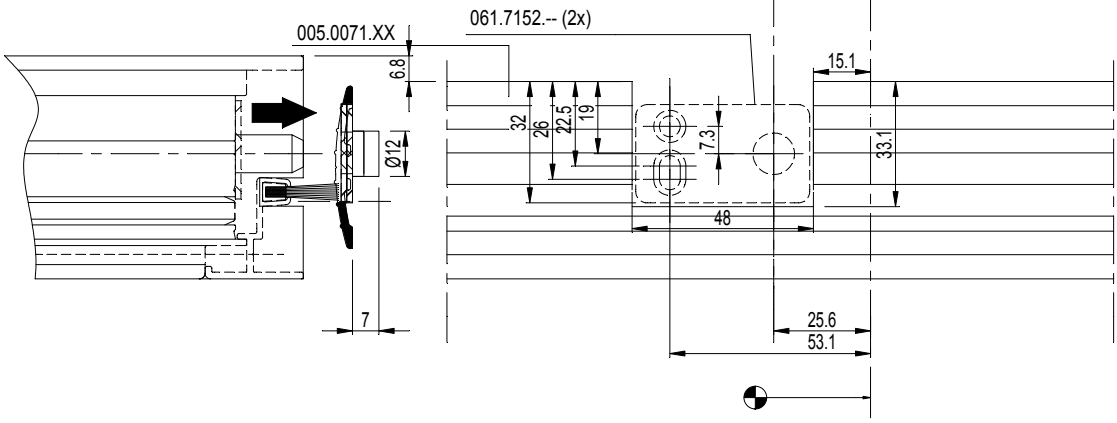

F

D0081914

INBOUW ESPAGNOLETSLOT
ENCASTREMENT FERMETURE ESPAGNOLETTE
EMBEDDING ESPAGNOLETTE LOCK
EINBAU FALZTREIBRIEGEL

** VOORBOREN Ø 3
AMORCER Ø 3
ROUGH-DRILL Ø 3
VORBOHREN Ø 3

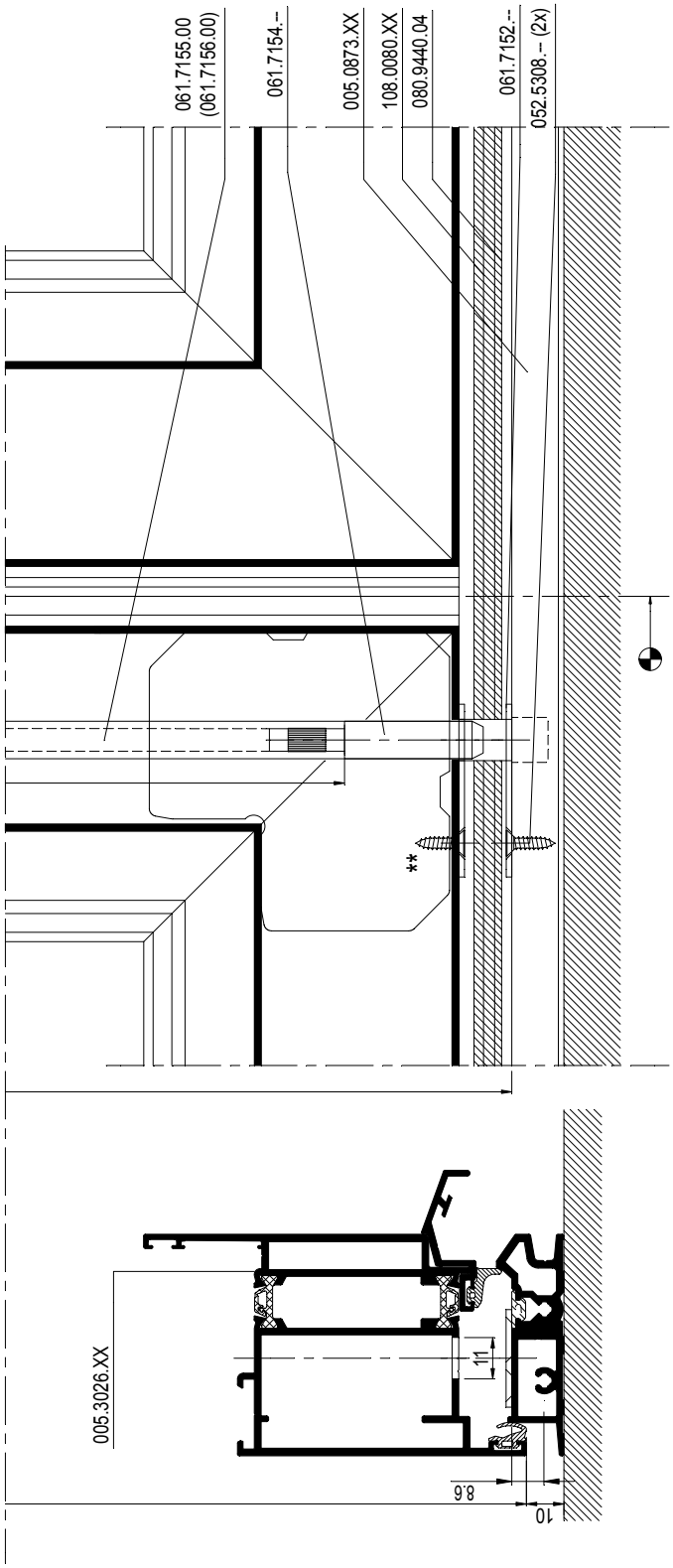

D0081915

CS 68-FP
EW 30

INBOUW ESPAGNOLETSLOT
ENCASTREMENT FERMETURE ESPAGNOLETTE
EMBEDDING ESPAGNOLETTE LOCK
EINBAU FALZTREIBRIEGEL

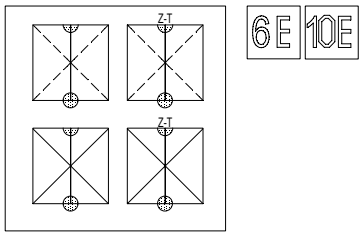

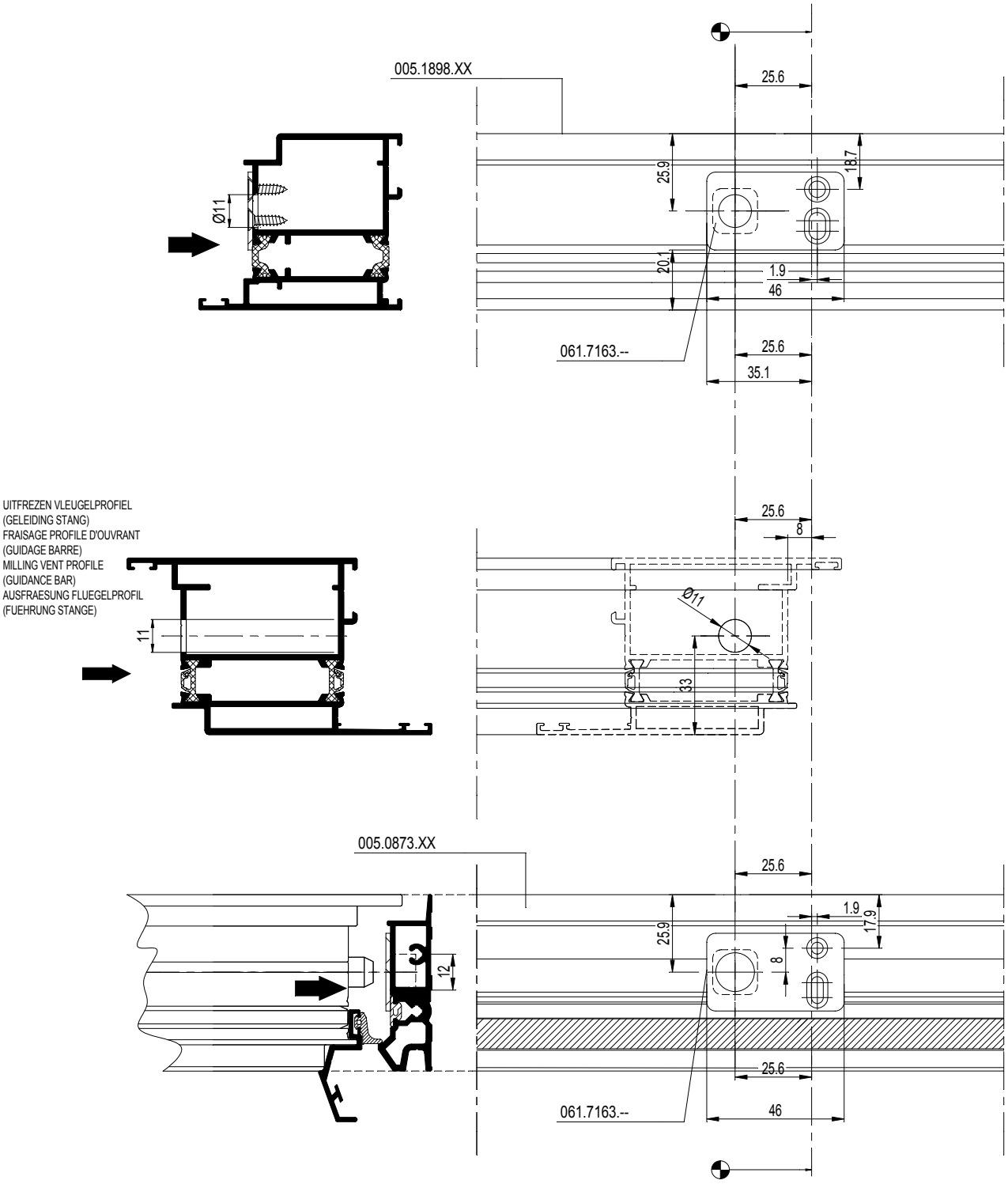

F

D0081915

INBOUW ESPAGNOLETSLOT
ENCASTREMENT FERMETURE ESPAGNOLETTE
EMBEDDING ESPAGNOLETTE LOCK
EINBAU FALZTREIBRIEGEL

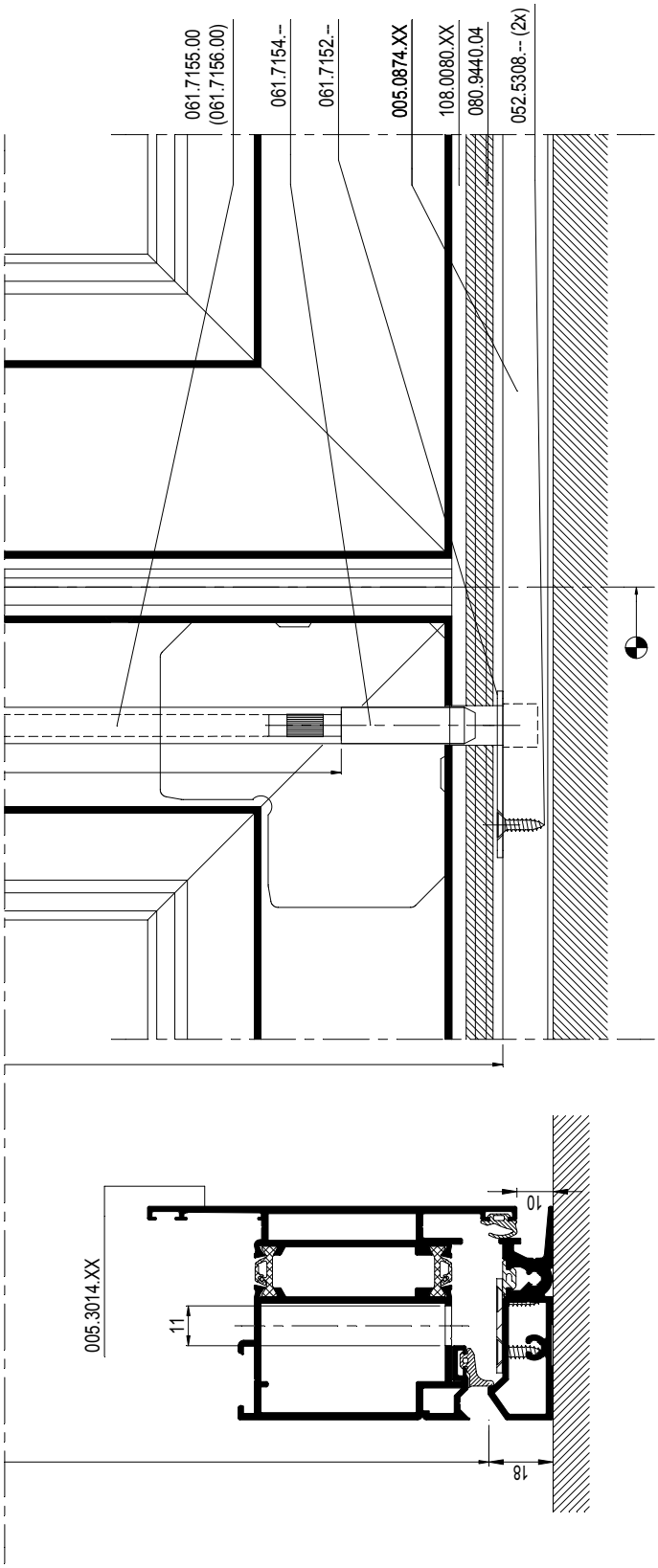

F

D0081916

INBOUW ESPAGNOLETSLOT
ENCASTREMENT FERMETURE ESPAGNOLETTE
EMBEDDING ESPAGNOLETTE LOCK
EINBAU FALZTREIBRIEGEL

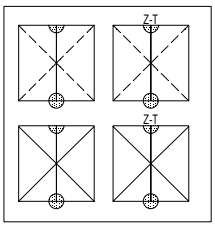

8E 12E

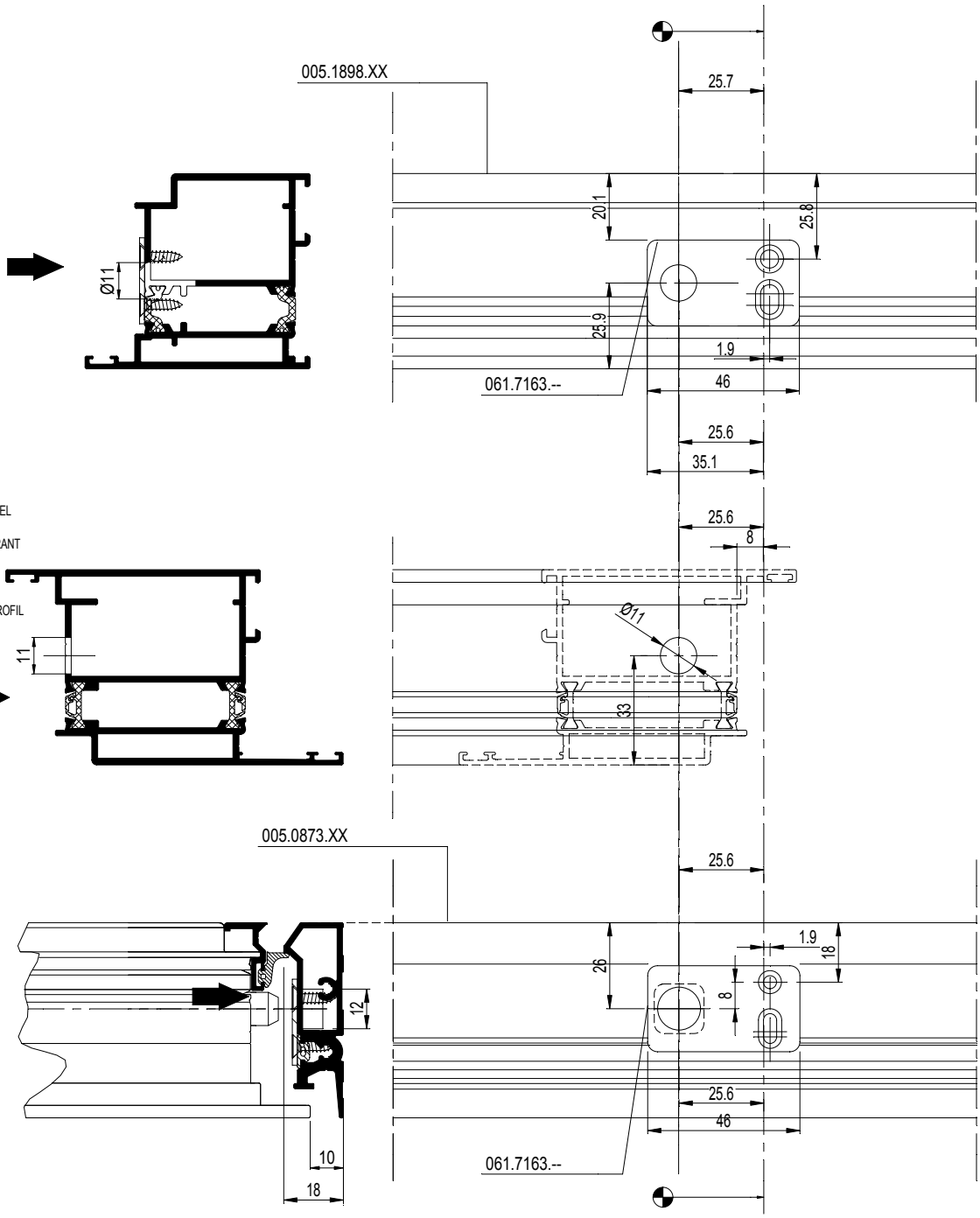

F

D0081916

INBOUW ESPAGNOLETSLOT
ENCASTREMENT FERMETURE ESPAGNOLETTE
EMBEDDING ESPAGNOLETTE LOCK
EINBAU FALZTREIBRIEGEL

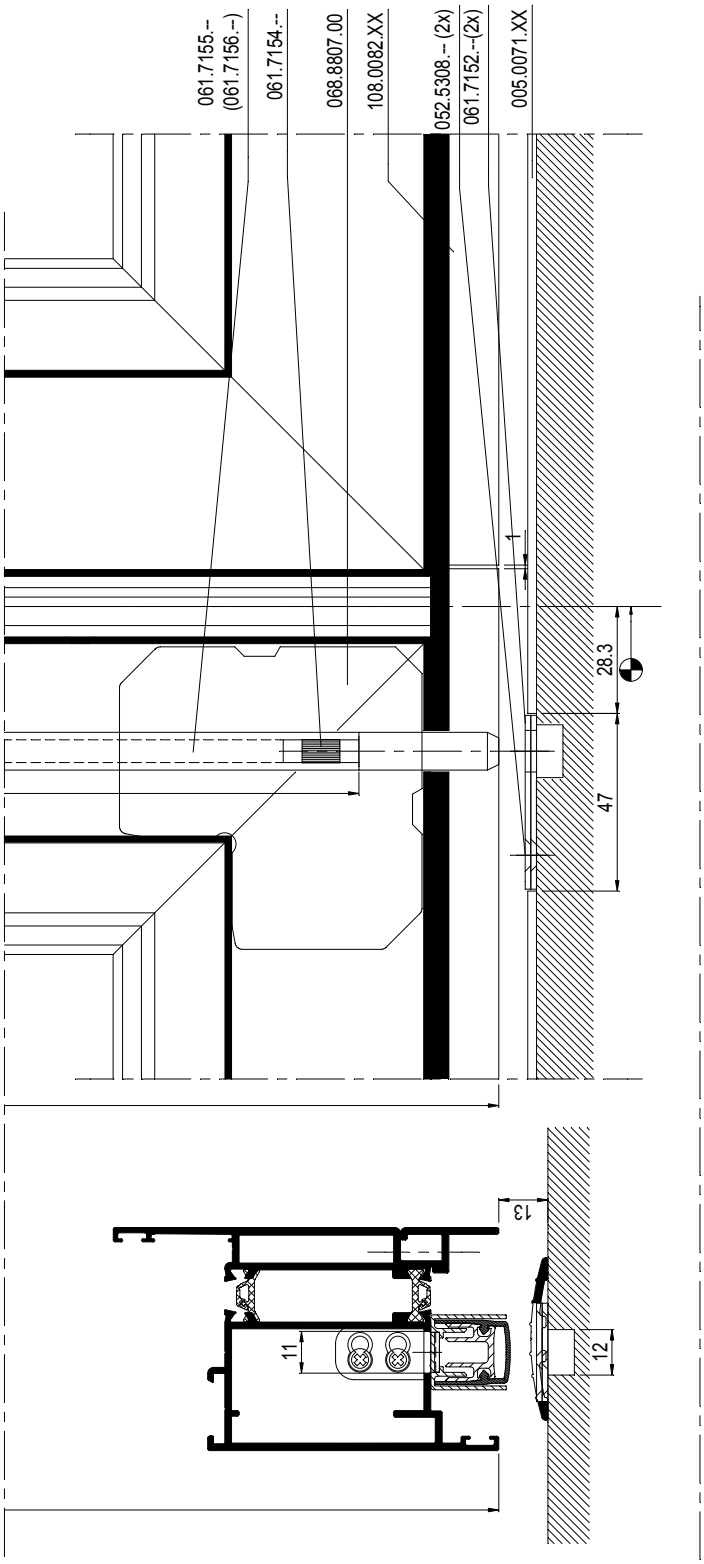

D0081917

CS 68-FP
EW 30

INBOUW ESPAGNOLETSLOT
ENCASTREMENT FERMETURE ESPAGNOLETTE
EMBEDDING ESPAGNOLETTE LOCK
EINBAU FALZTREIBRIEGEL

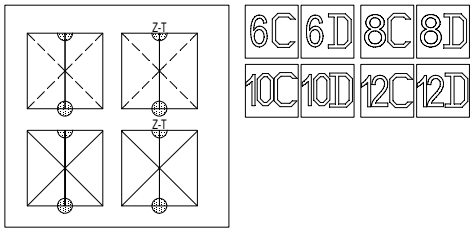

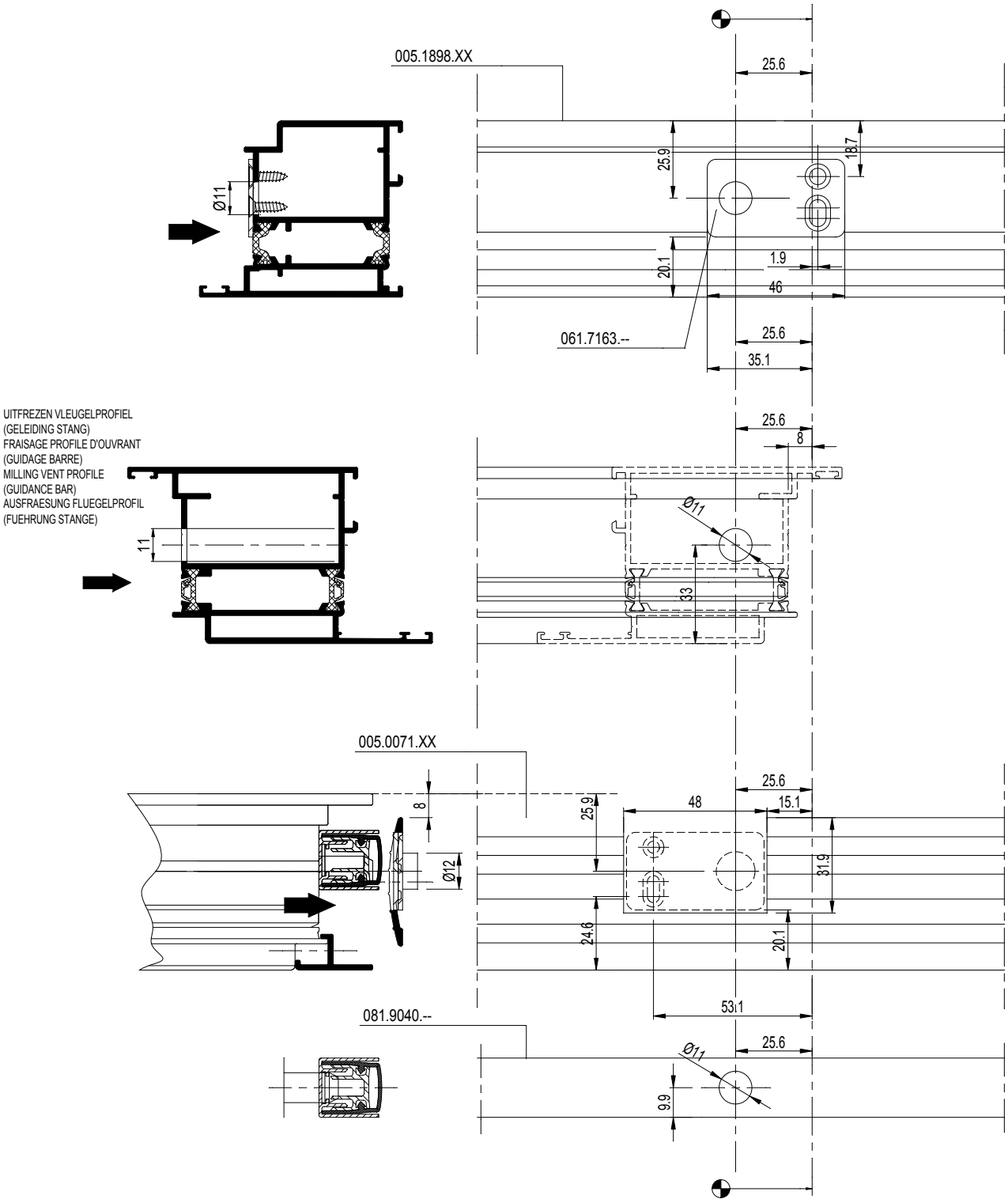

F

D0081917

SCHARNIEREN RAAMDEUREN SOBINCO
CHARNIERES PORTE-FENETRES SOBINCO
HINGES WINDOW-DOORS SOBINCO
BAENDER FENSTERTUEREN SOBINCO

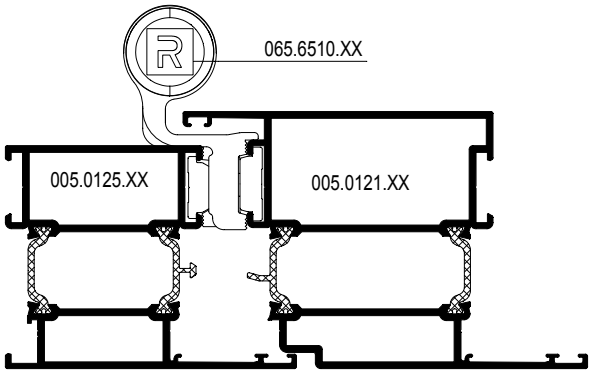

Scharnier kan gemonteerd worden voor profielcombinatie DIN R en DIN L
La charnière peut être assemblée pour la combinasion des profilés DIN D et DIN G
Hinge can be assembled for DIN R and DIN L profile combination
Das band kann für die Profilkombination DIN R en DIN L montiert werden

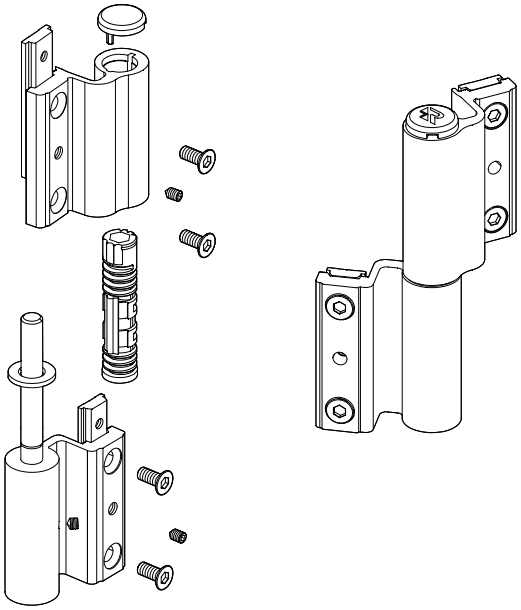

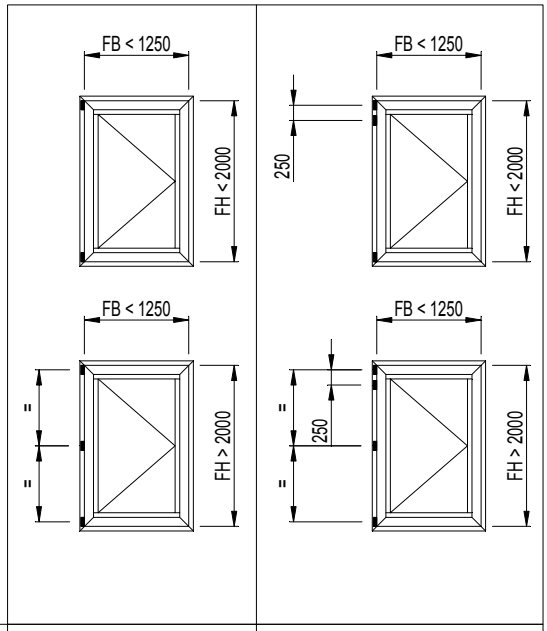

Private plaatsen - Lieux privats - Private application - Privatanwendung	max. 100 kg	max. 100 kg + 15%
Publieke plaatsen - Lieux publics - Public application - Öffentliche Anwendung	max. 90 kg	max. 90 kg + 15%
Publieke plaatsen met deursluiter - Lieux publics avec fermeture de porte - Public application with door closer - Öffentliche Anwendung mit Türschliesser	max. 80 kg	max. 80 kg + 15%

F

D0081919

SCHARNIEREN RAAMDEUREN SOBINCO
CHARNIERES PORTE-FENETRES SOBINCO
HINGES WINDOW-DOORS SOBINCO
BAENDER FENSTERTUEREN SOBINCO

SCHARNIER NAAR BINNENDRAAIEND
CHARNIERE OUVRANT VERS L'INTERIEUR
HINGE INWARD OPENING
BAND NACH INNEN OEFFNEND

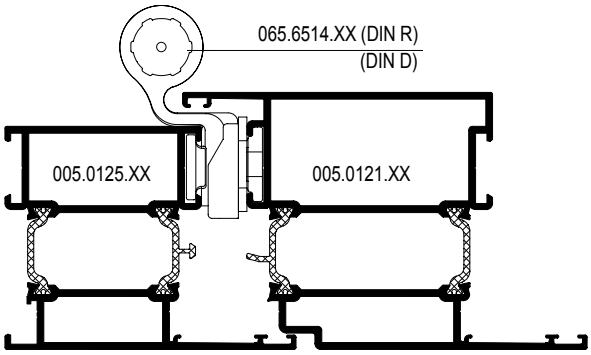

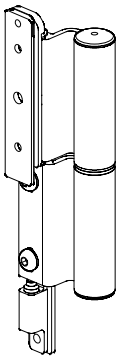

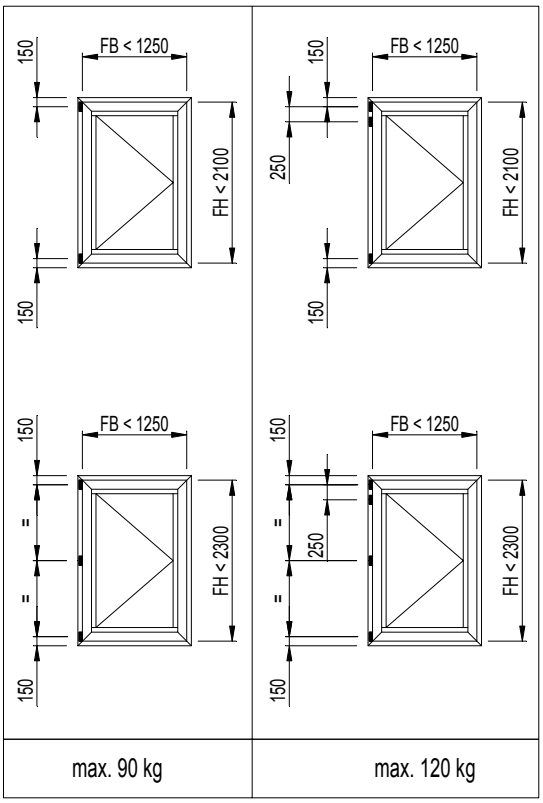

SCHARNIER NAAR BUITENDRAAIEND
CHARNIERE OUVRANT VERS L'EXTERIEUR
HINGE OUTWARD OPENING
BAND NACH AUSSEN OEFFNEND

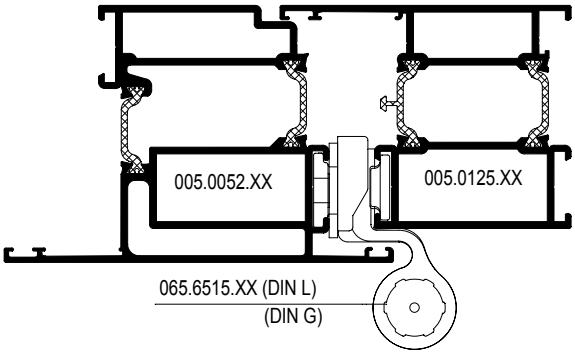

F

D0081919

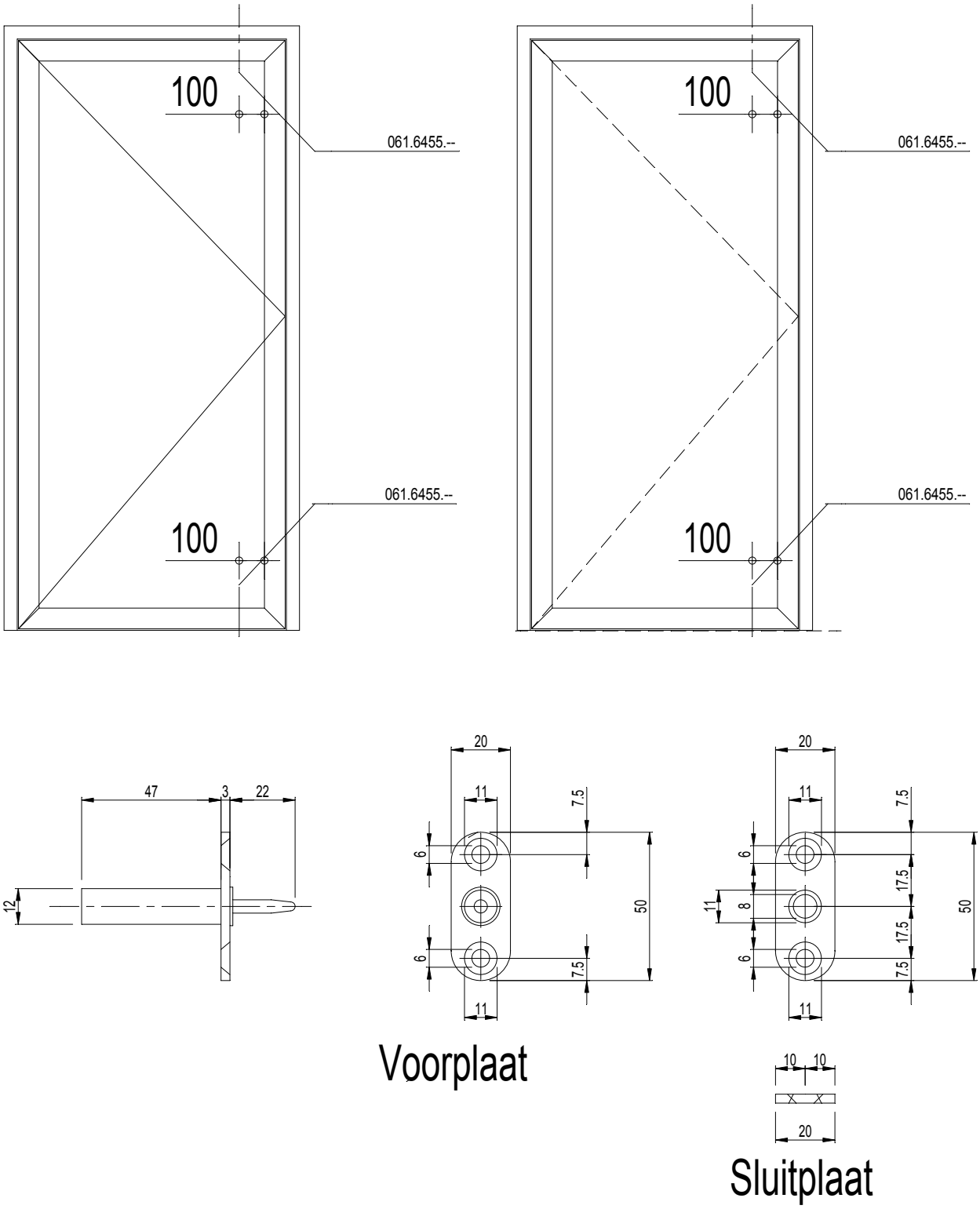

Temperatuurpen 061.6455.--

Altijd toepassen bij 3, 5, of 7 puntssluiting

F

D0090575

TEMPERATUURPEN
GOUPILLE DE TEMPERATURE
TEMPERATURE PEN
TEMPERATURSTIFT

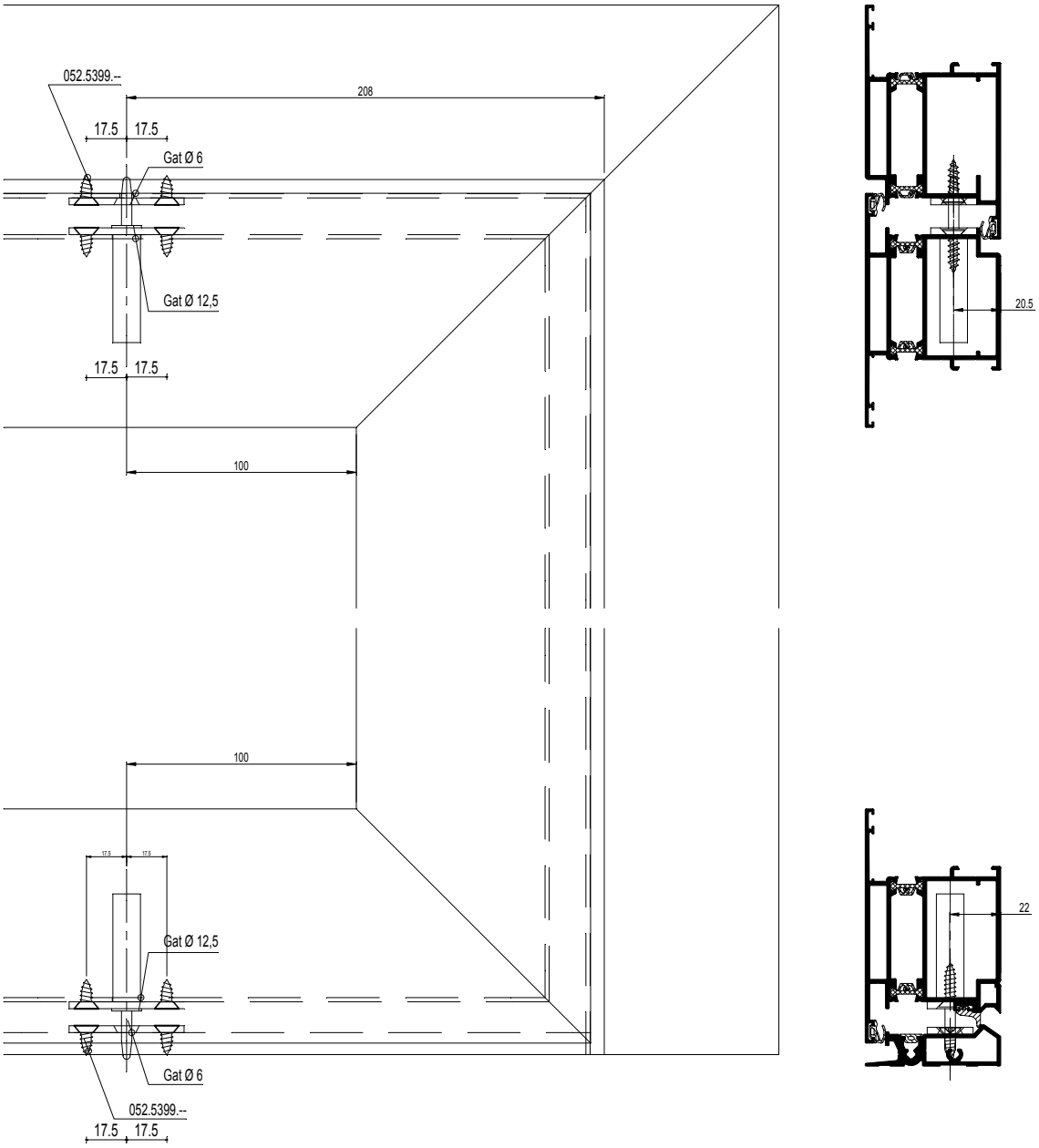

F

D0090575

OVERZICHT DEURSCHARNIEREN
APERCU PAUMELLES PORTE
OVERVIEW DOOR HINGES
UEBERSICHT TUERBAENDER

D0081920

OVERZICHT DEURSCHARNIEREN
APERCU PAUMELLES PORTE
OVERVIEW DOOR HINGES
UEBERSICHT TUERBAENDER

	Stainless Steel	Chromated Steel
TB IV (48 MM)	065.6601.--	065.6610.--
TB IV (58 MM)	065.6600.--	065.6611.--
Serie 60 AT (42 MM)	065.6603.--	065.6613.--
Serie 60 AT (50 MM)	065.6604.--	065.6614.--
Serie 60 AT (55 MM)	065.6605.--	065.6615.--

De bevestiging van de Türband IV en Serie 60 AT scharnieren kan gebeuren door twee types verankeringen.
Voor buiten toepassingen en toepassing in een omgeving met agressieve atmosfeer (industrie-gebied, kustgebied, zwembaden,....) moet gebruik gemaakt worden van de inox bevestigingsmaterialen.
Bij binnen (droge) toepassingen kan gebruik gemaakt worden van de gechromateerde stalen bevestigingsmaterialen.
Let op, verifieer altijd met uw lokale wetgeving of het gebruik van (behandelde) stalen bevestingsmiddelen toegestaan is!

La fixation des charnières Türband IV et de la Série 60 AT peut s'effectuer au moyen de deux types d'ancrages.
Pour les applications extérieures et dans les environnements où règne une atmosphère agressive (zone industrielle, littoral, piscines,…), il y a lieu de choisir les dispositifs de fixation en inox.
En cas d'applications intérieures (au sec), on peut utiliser des dispositifs de fixation en acier chromaté.
Attention : vérifiez toujours si la législation locale autorise l'utilisation de dispositifs de fixation en acier (traité) !

The Türband IV and Series 60 AT hinges can be attached with two types of anchors.
For use outdoors and in environments with aggressive atmospheres (industrial zones, coastal areas, swimming pools, etc.) stainless steel anchors have to be used.
Indoors (in dry areas) chrome-plated steel anchors should be used.
Always verify whether local legislation permits the use of (treated) steel anchors!

Die Befestigung der Scharniere für Türband IV und Serie 60 AT kann durch zwei Verankerungstypen erfolgen.
Für den Einsatz im Freien und in einer Umgebung mit einer aggressiven Atmosphäre (Industriegebiet, Küstenregion, Schwimmbäder ....) müssen Befestigungselemente aus rostfreiem Stahl verwendet werden.
Bei Einsatz in Innenräumen können Befestigungselemente aus chromatiertem Stahl verwendet werden.
Achtung: Überprüfen Sie, ob die Verwendung von Befestigungselementen aus (behandeltem) Stahl nach den am Ort geltenden Vorschriften zulässig ist!

DEURSCHARNIEREN TUERBAND 4
PAUMELLES PORTE TUERBAND 4
DOOR HINGES TUERBAND 4
TUERBAENDER TUERBAND 4

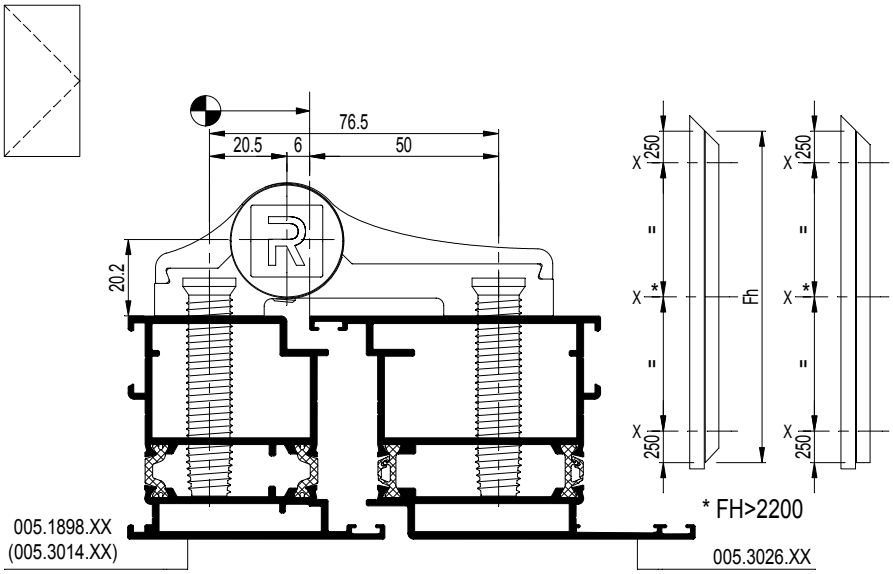

DEURSCHARNIER 2-DELIG
PAUMELLE PORTE 2-PARTITE
DOOR HINGE 2-PART
TÜRBAND 2-TEILIG

DEURSCHARNIER 3-DELIG
PAUMELLE PORTE 3-PARTITE
DOOR HINGE 3-PART
TÜRBAND 3-TEILIG

BEVESTIGINGSMIDDEL
MOYENS DE FIXATION
FIXINGS
BEFESTIGUNGSMITTEL

065.6656.XX 065.6600.-- (4x)	095.A900.00 and	095.A926.00 or	097.0368.00 and 097.0676.00

065.6688.XX 065.6600.-- (6x)	095.A900.00 and	095.A927.00 or	097.0369.00 and 097.0676.00

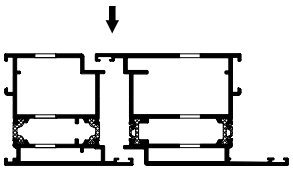

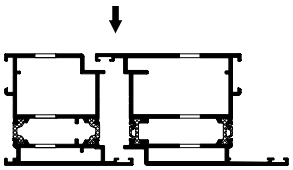

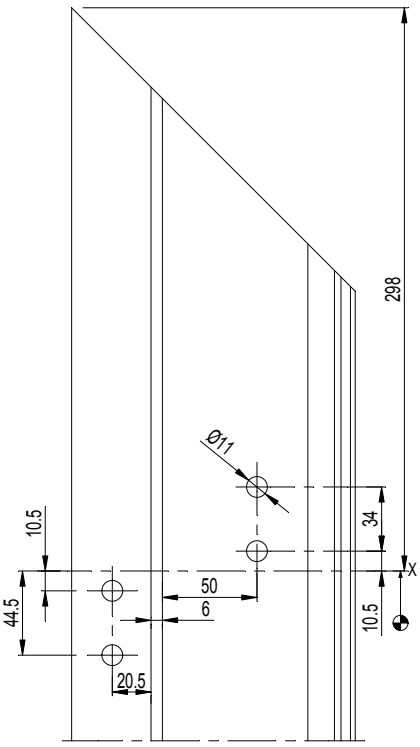

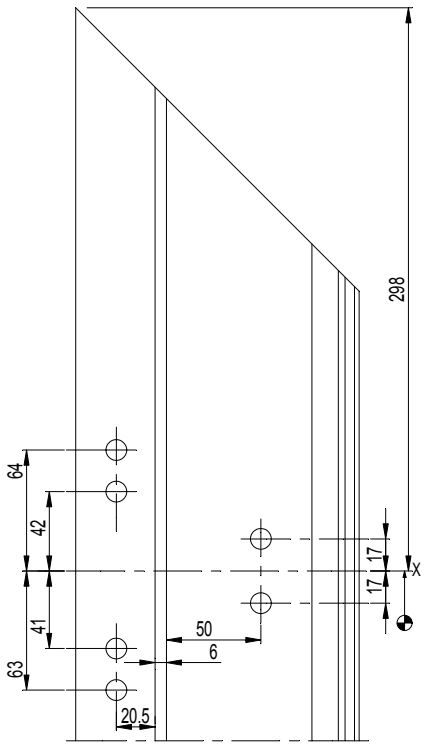

D0081921

F

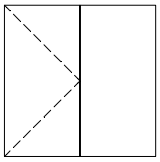

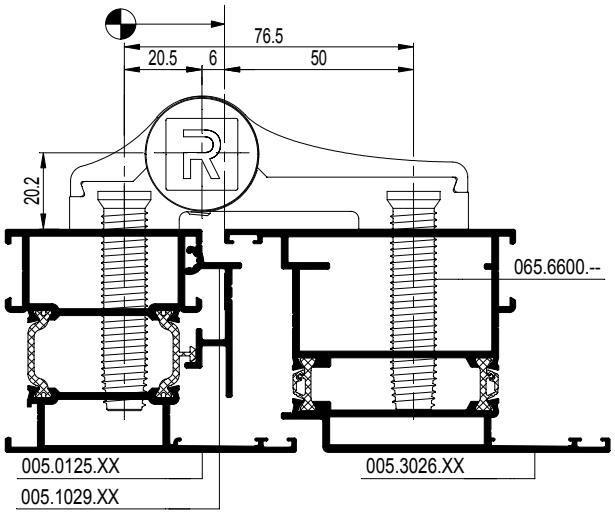

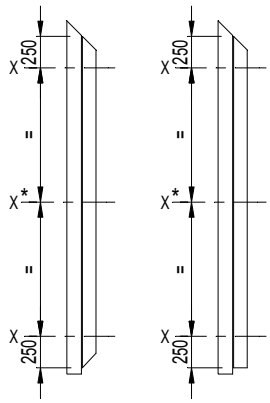

065.6656.XX 065.6600.-- (4x)	095.A900.00 and	095.A926.00 or	097.0368.00 and 097.0676.00

065.6688.XX 065.6600.-- (6x)	095.A900.00 and	095.A927.00 or	097.0369.00 and 097.0676.00

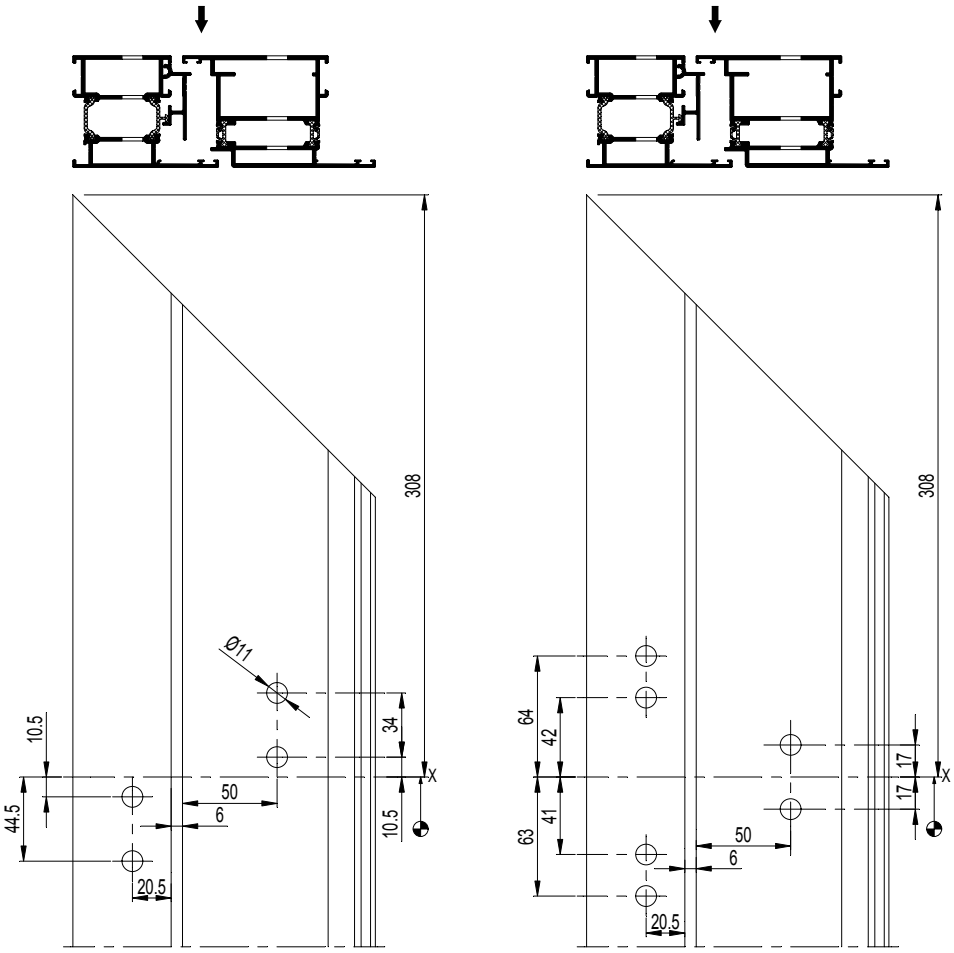

F

D0081921

DEURSCHARNIEREN TUERBAND 4
PAUMELLES PORTE TUERBAND 4
DOOR HINGES TUERBAND 4
TUERBAENDER TUERBAND 4

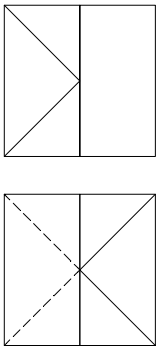

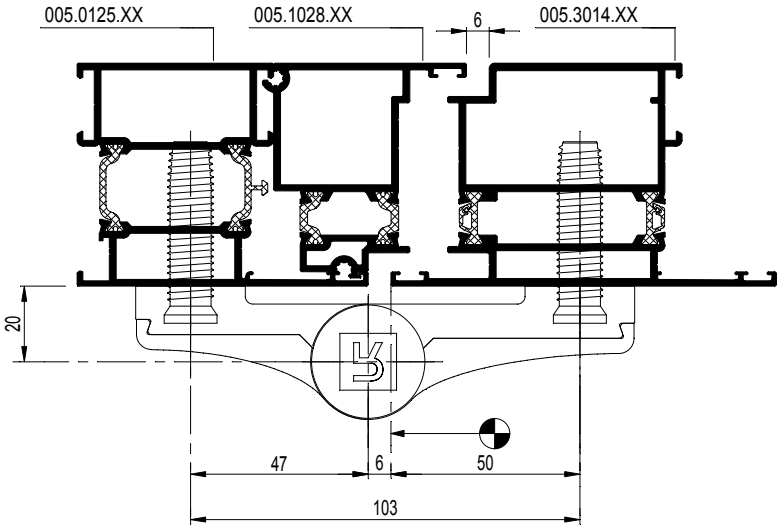

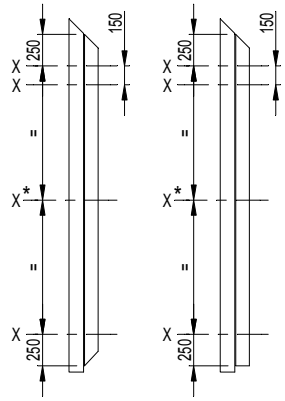

* FH>2200

065.6714.XX 065.6601.-- (4X)	095.A900.00 and	095.A926.00 or	097.0368.00 and 097.0676.00

065.6689.XX 065.6601.-- (6X)	095.A900.00 and	095.A927.00 or	097.0369.00 and 097.0676.00

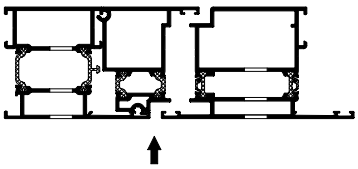

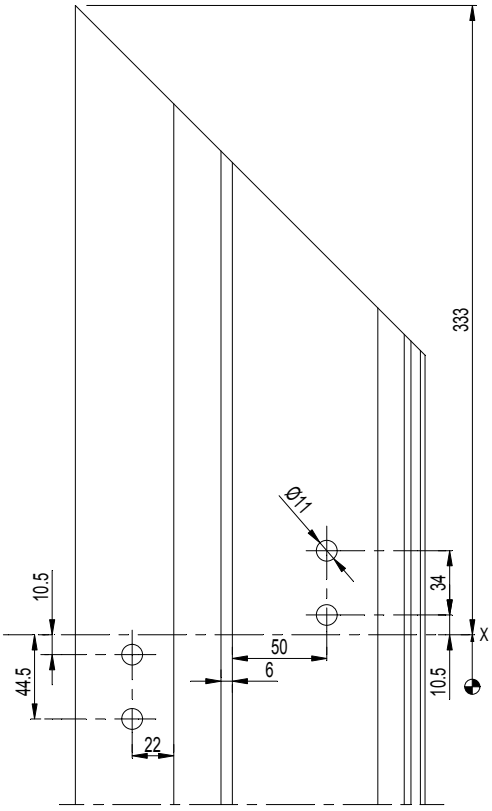

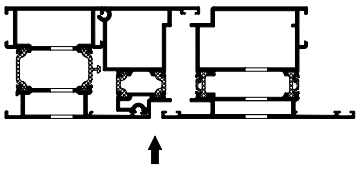

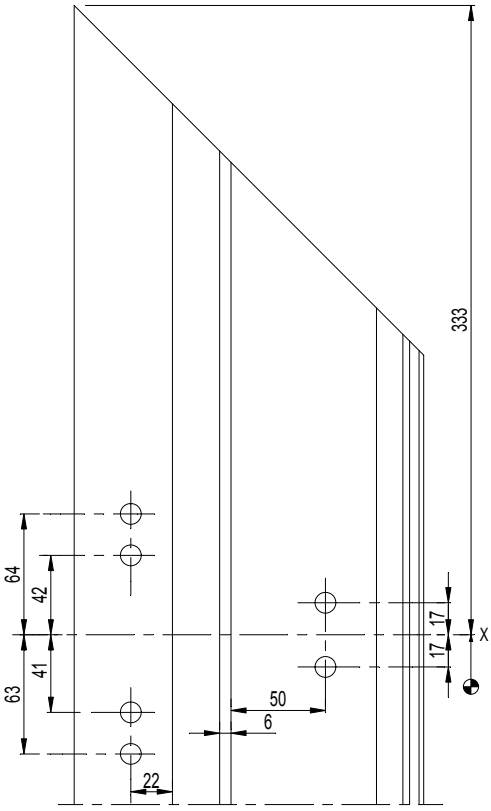

D0081922

F

DEURSCHARNIEREN TUERBAND 4
PAUMELLES PORTE TUERBAND 4
DOOR HINGES TUERBAND 4
TUERBAENDER TUERBAND 4

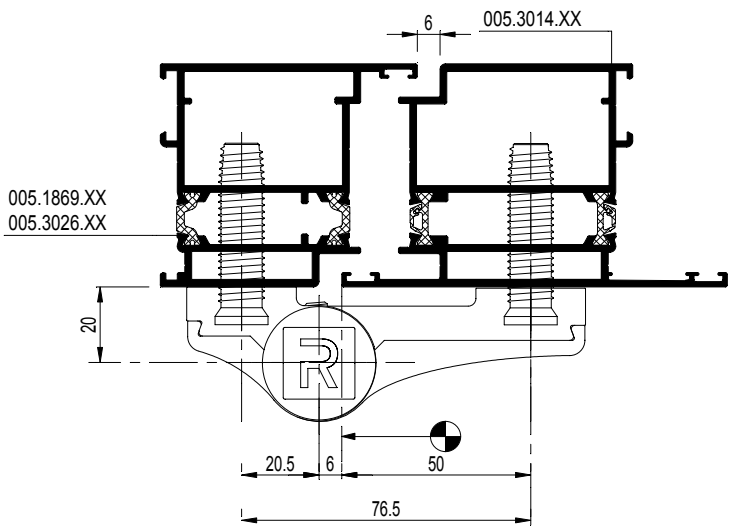

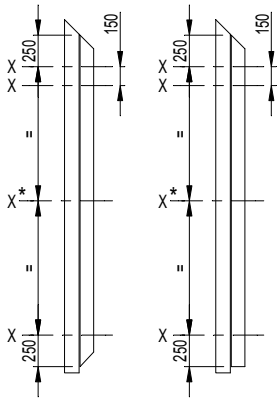

* FH>2200

065.6656.XX 065.6601.-- (4x)	095.A900.00 and	095.A926.00 or	097.0368.00 and 097.0676.00

065.6688.XX 065.6601.-- (6x)	095.A900.00 and	095.A927.00 or	097.0369.00 and 097.0676.00

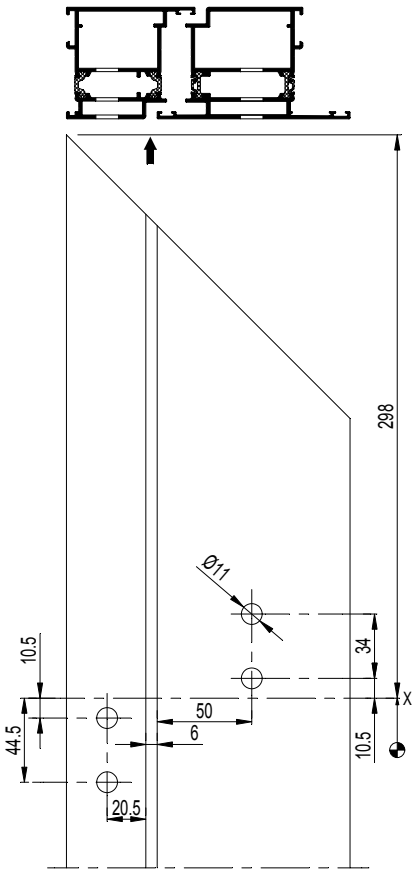

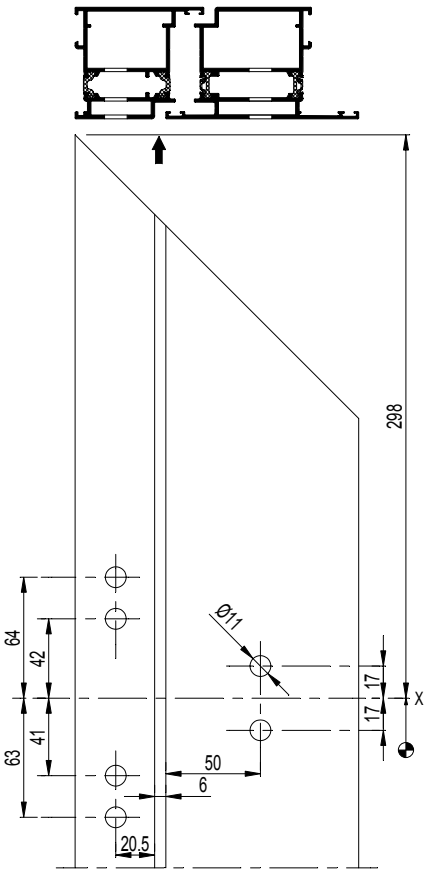

F

D0081922

CS 68-FP
EW 30

DEURSCHARNIEREN TUERBAND 4
PAUMELLES PORTE TUERBAND 4
DOOR HINGES TUERBAND 4
TUERBAENDER TUERBAND 4

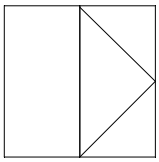

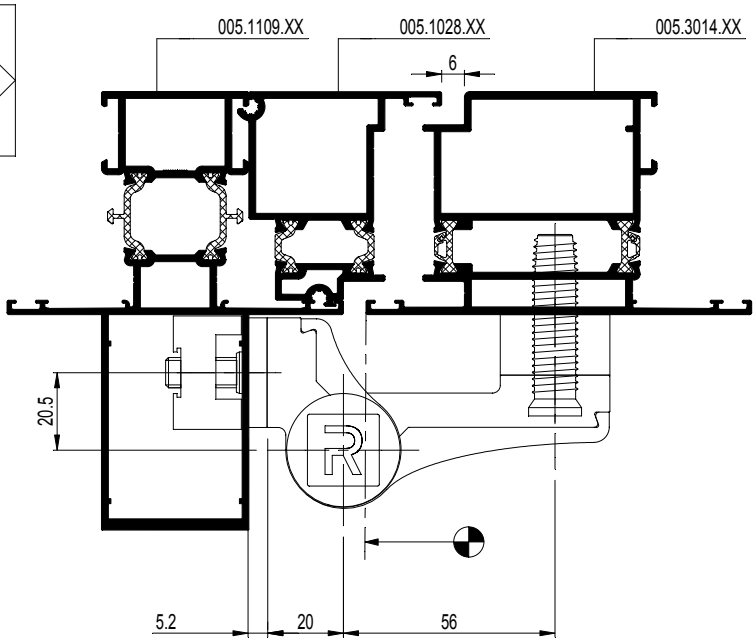

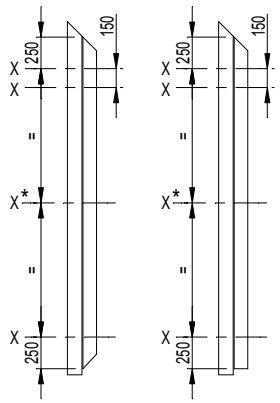

* FH>2200

065.6684.XX	-	-	097.0387.00
065.6601.-- CS 68			
065.6600.-- CS 77			

F

D0081923

DEURSCHARNIEREN TUERBAND 4
PAUMELLES PORTE TUERBAND 4
DOOR HINGES TUERBAND 4
TUERBAENDER TUERBAND 4

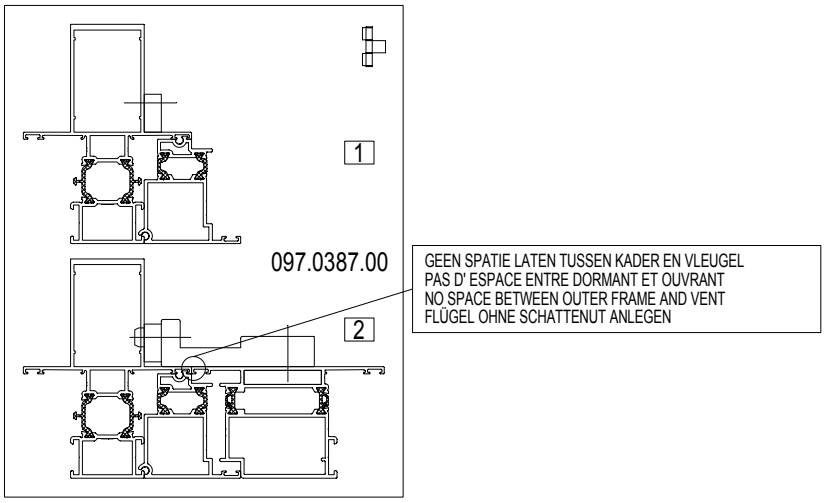

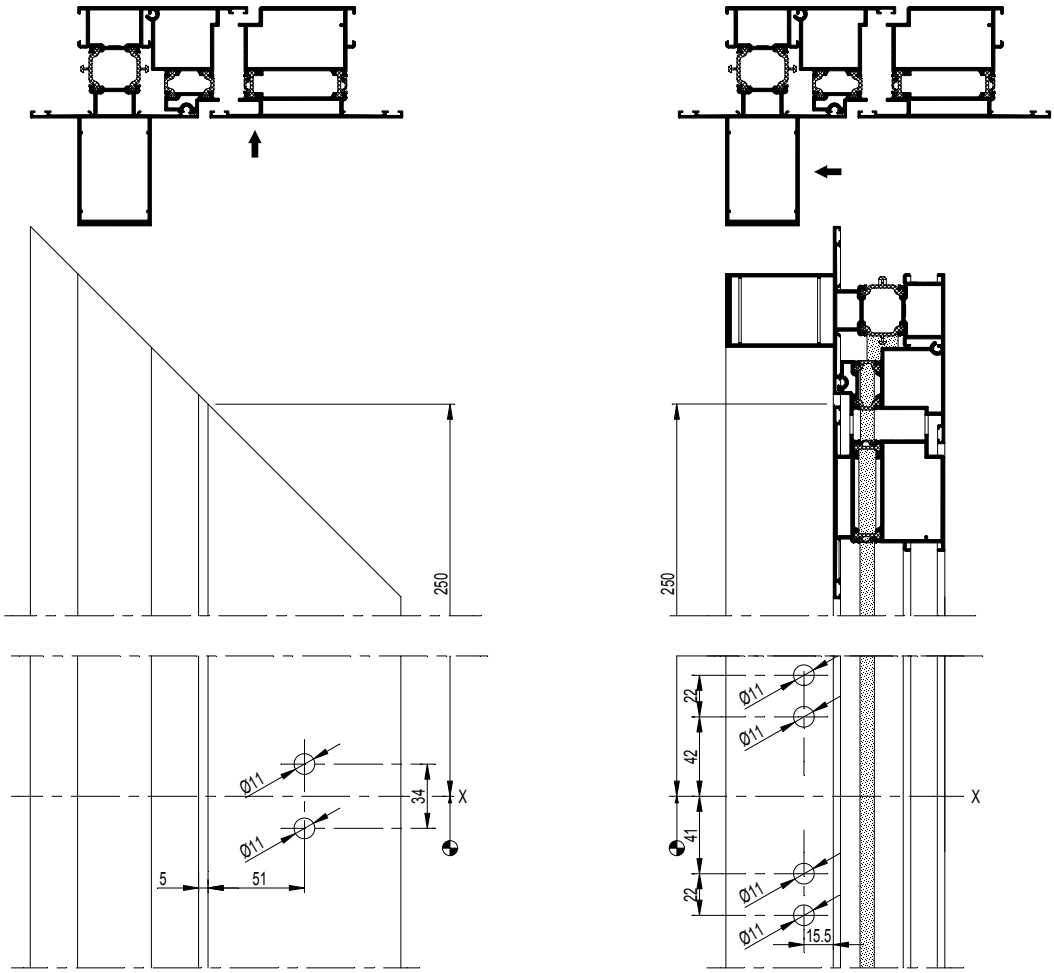

F

D0081923

DEURSCHARNIEREN SERIE 60 AT
PAUMELLES PORTE SERIE 60 AT
DOOR HINGES SERIE 60 AT
TUERBAENDER SERIE 60 AT

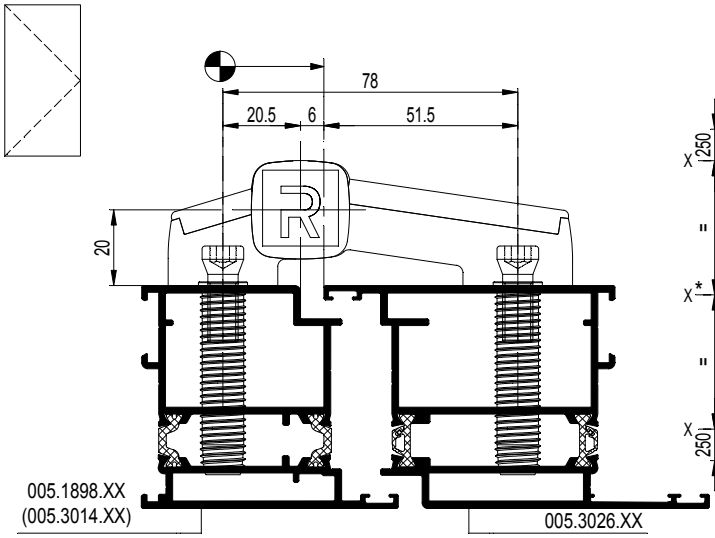

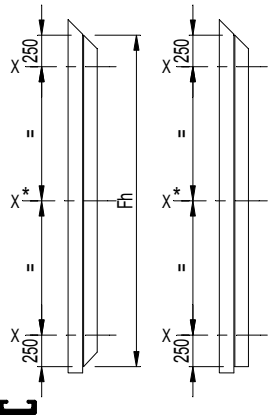

DEURSCHARNIER 2-DELIG
PAUMELLE PORTE 2-PARTITE
DOOR HINGE 2-PART
TÜRBAND 2-TEILIG

DEURSCHARNIER 3-DELIG
PAUMELLE PORTE 3-PARTITE
DOOR HINGE 3-PART
TÜRBAND 3-TEILIG

BEVESTIGINGSMIDDEL
MOYENS DE FIXATION
FIXINGS
BEFESTIGUNGSMITTEL

* FH>2200

065.6812.XX 065.6604.-- (4x)	095.A900.00 and	095.A930.00 or	097.0480.00

065.6813.XX 065.6604.-- (6x)	095.A900.00 and	095.A928.00 or	097.0471.00

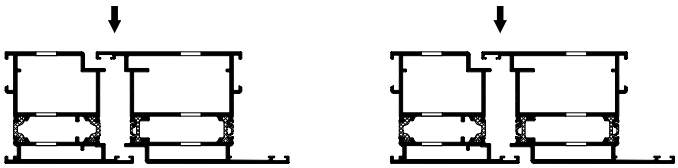

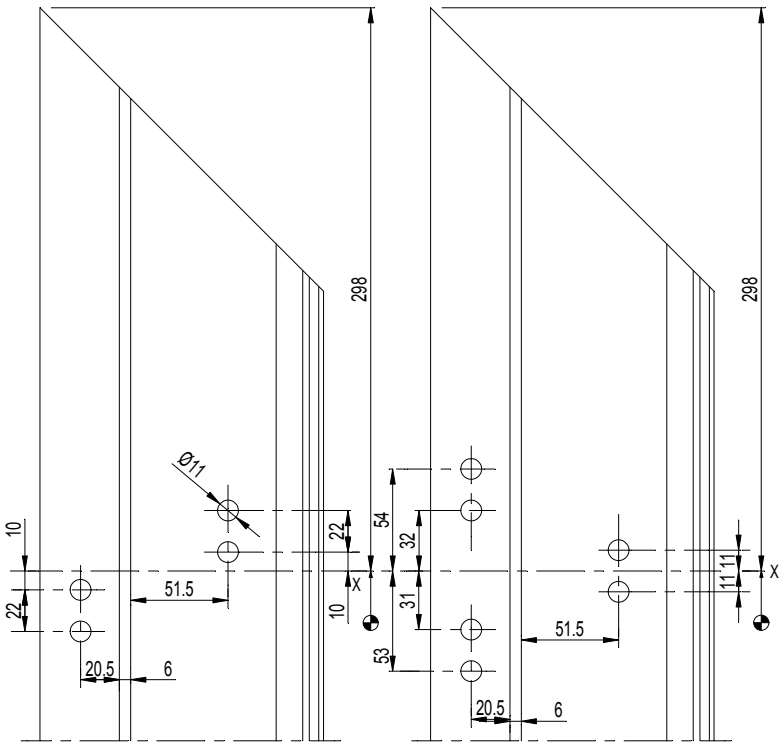

F

D0081925

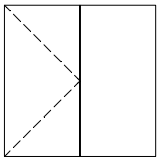

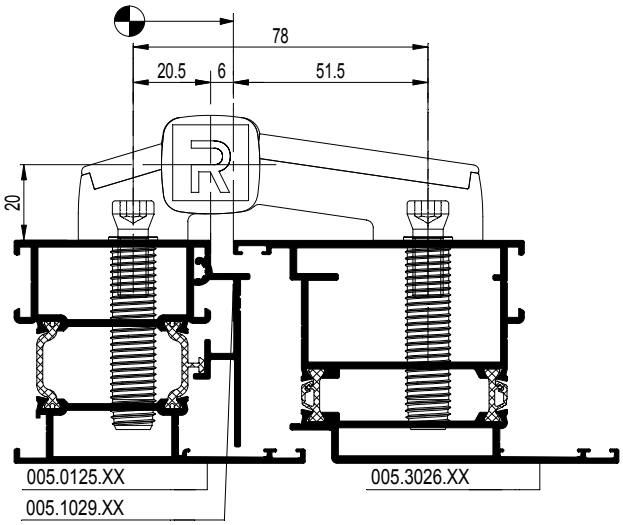

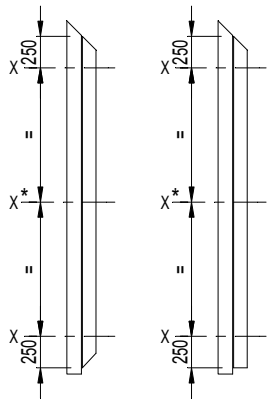

* FH>2200

065.6812.XX 065.6604.-- (4X)	095.A900.00 and	095.A930.00 or	097.0480.00

065.6813.XX 065.6604.-- (6X)	095.A900.00 and	095.A928.00 or	097.0471.00

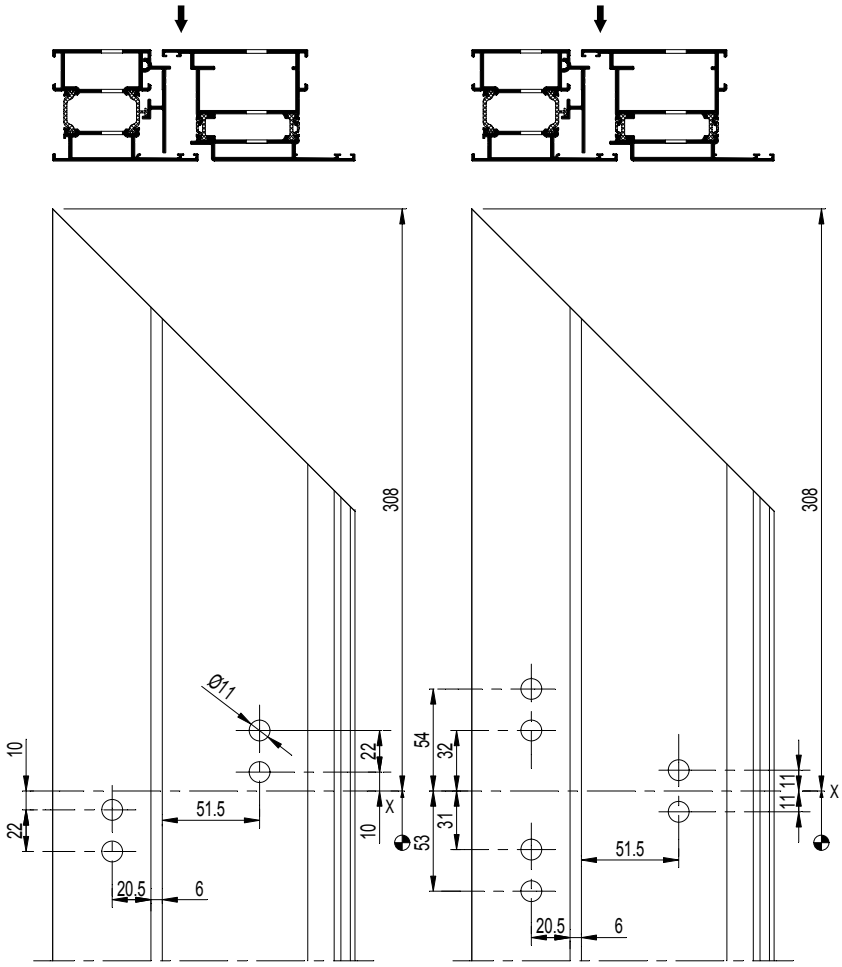

F

D0081925

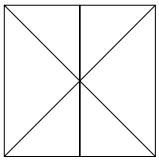

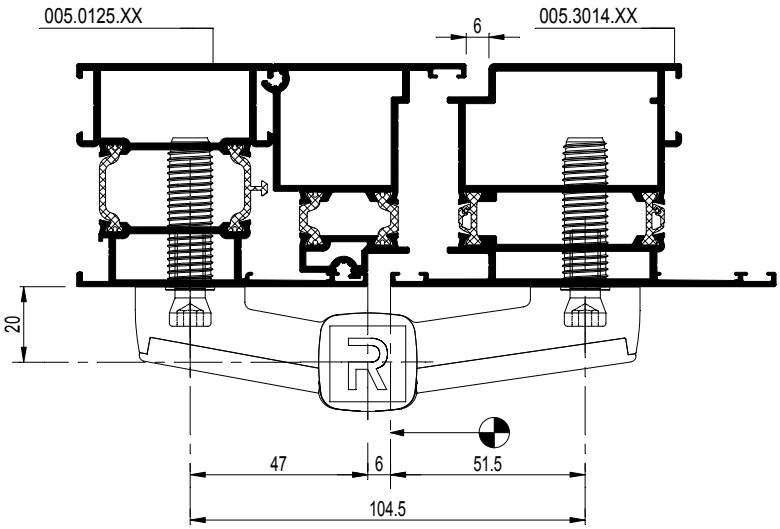

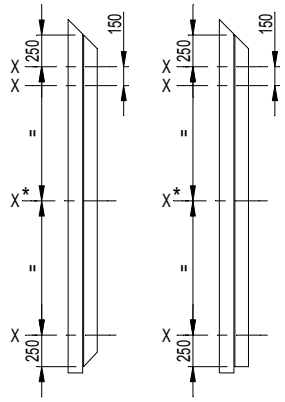

* FH>2200

065.6816.XX 065.6603.-- (4x)	095.A900.00 and	095.A930.00 or	097.0480.00

065.6817.XX 065.66603.-- (6x)	095.A900.00 and	095.A928.00 or	097.0471.00

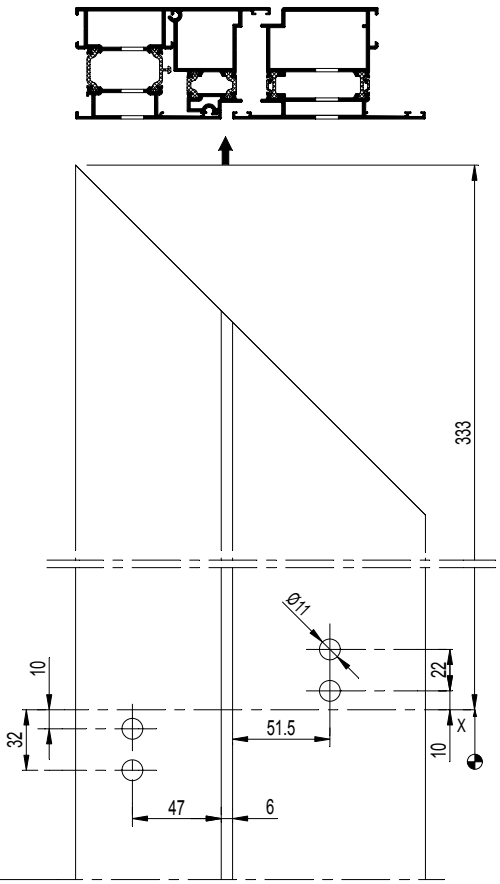

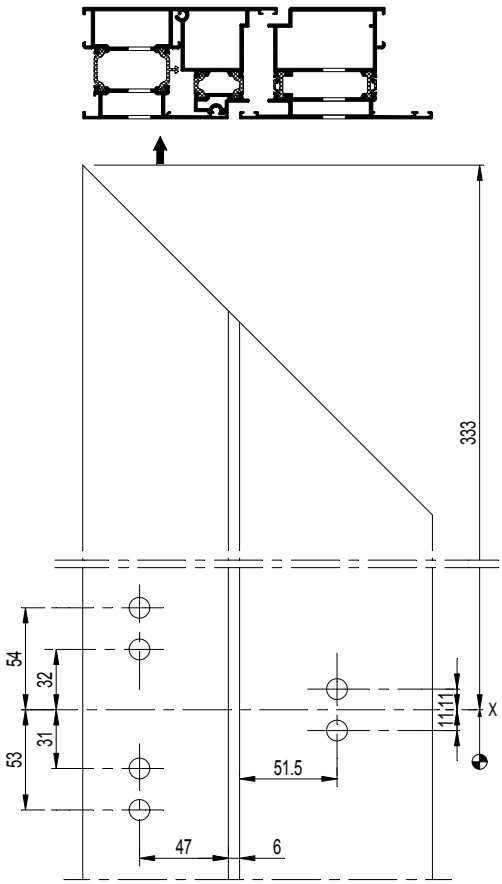

D0081926

F

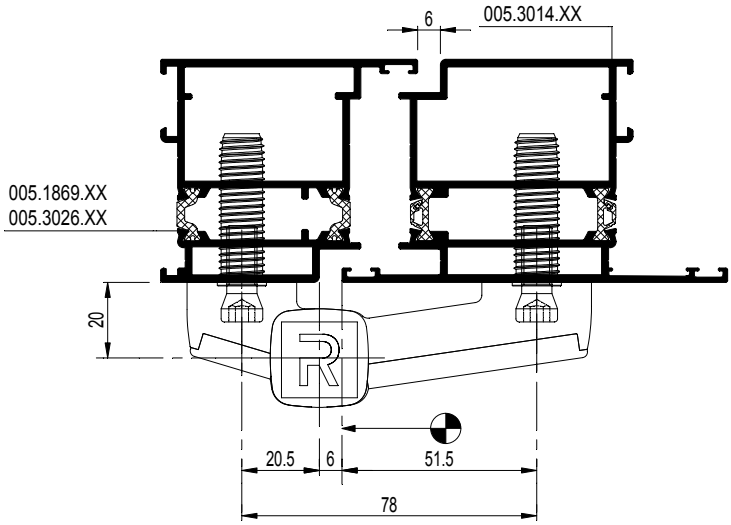

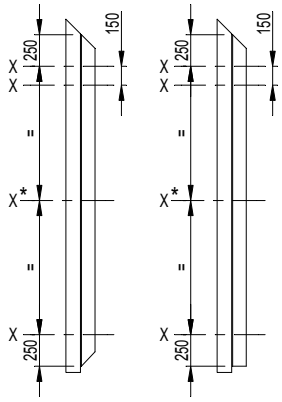

065.6812.XX 065.6603.-- (4x)	095.A900.00 and	095.A930.00 or	097.0480.00

065.6813.XX 065.6603.-- (6x)	095.A900.00 and	095.A280.00 or	097.0471.00

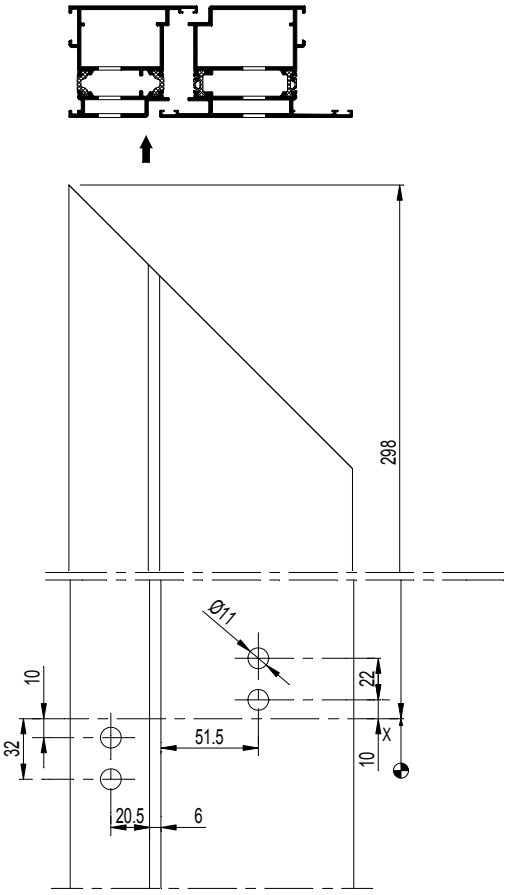

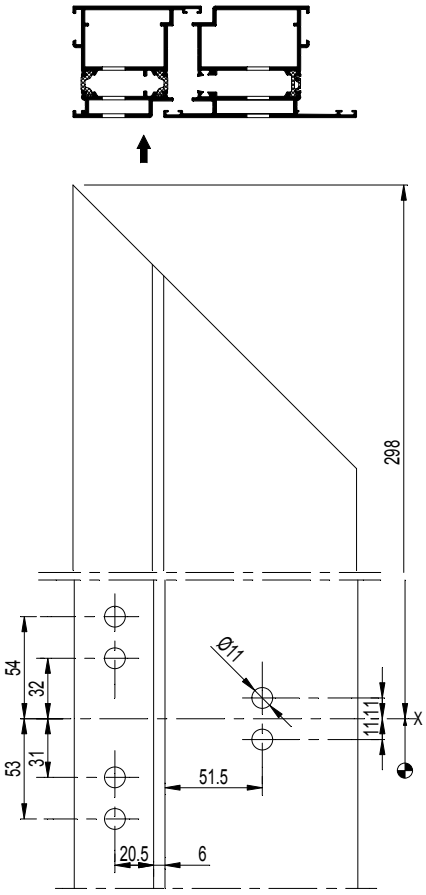

F

D0081926

DEURSCHARNIEREN ROLLENBAND
PAUMELLES PORTE ROLLENBAND
DOOR HINGES ROLLENBAND
TUERBAENDER ROLLENBAND

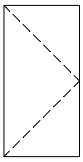

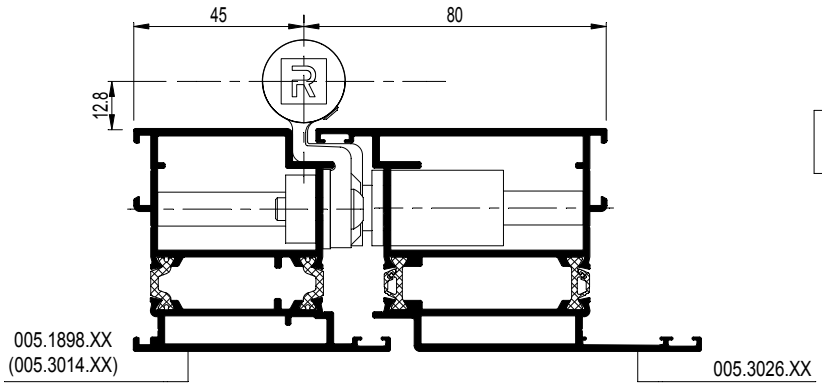

DEURSCHARNIER 3-DELIG
PAUMELLE PORTE 3-PARTITE
DOOR HINGE 3-PART
TÜRBAND 3-TEILIG

065.6391.XX	-- and	-- or	097.0684.00

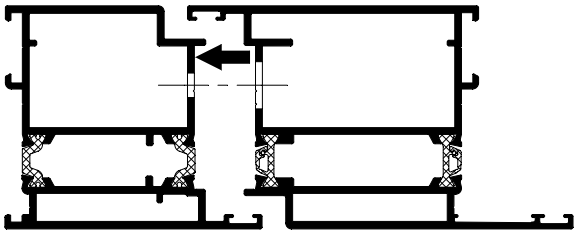

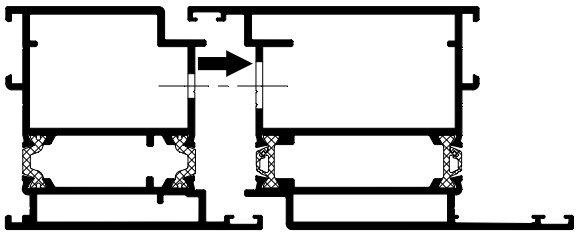

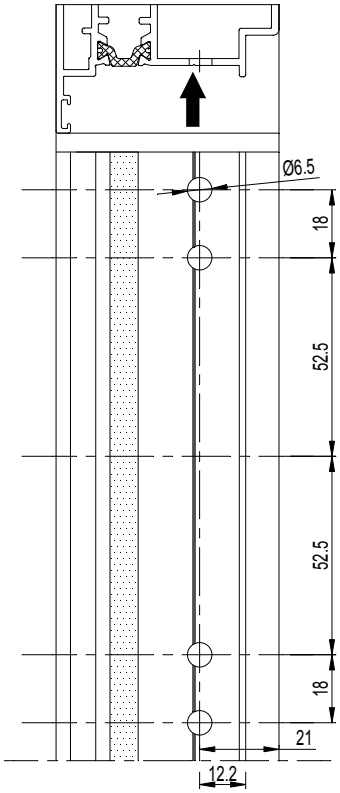

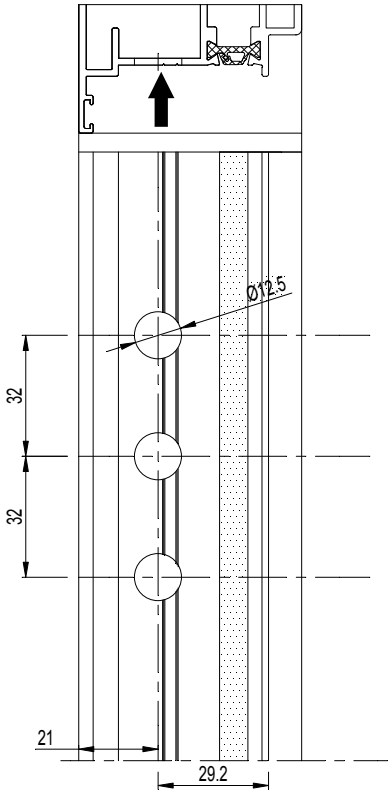

D0081930

DEURSCHARNIEREN ROLLENBAND
PAUMELLES PORTE ROLLENBAND
DOOR HINGES ROLLENBAND
TUERBAENDER ROLLENBAND

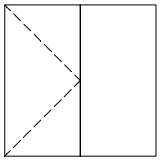

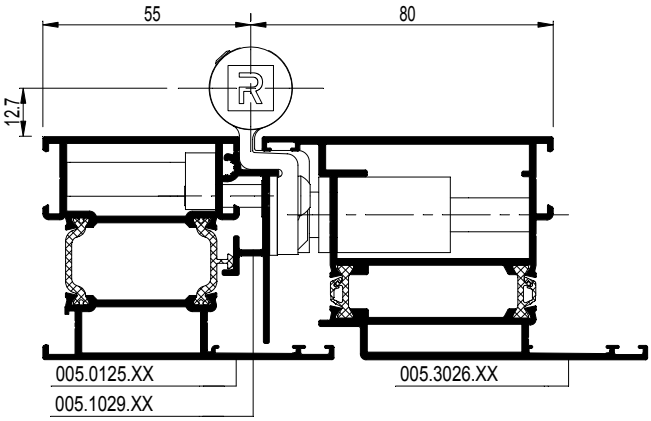

065.6394.XX	--	and	--	or	097.0685.00

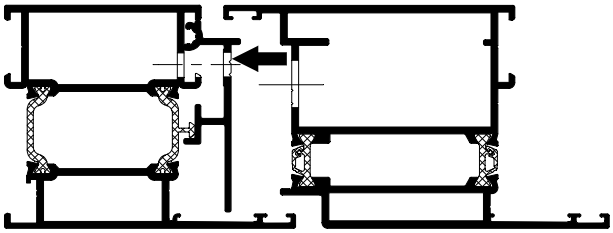

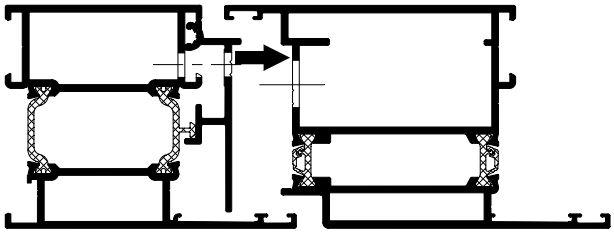

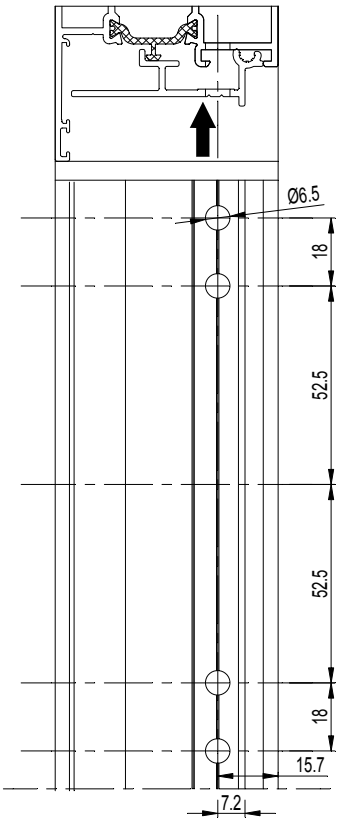

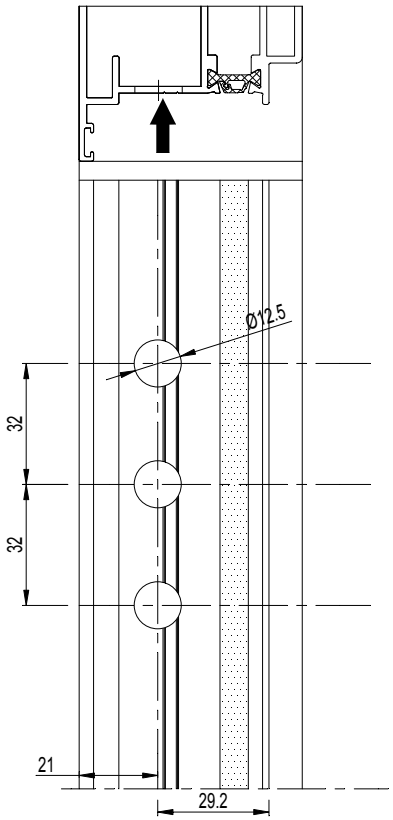

F

D0081930

DEURSCHARNIEREN ROLLENBAND
PAUMELLES PORTE ROLLENBAND
DOOR HINGES ROLLENBAND
TUERBAENDER ROLLENBAND

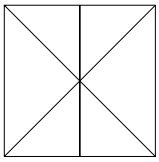

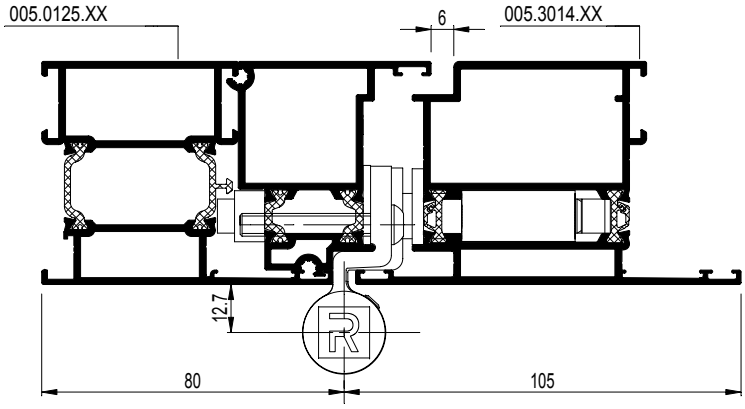

065.6385.XX	-- and	-- or	097.0684.00

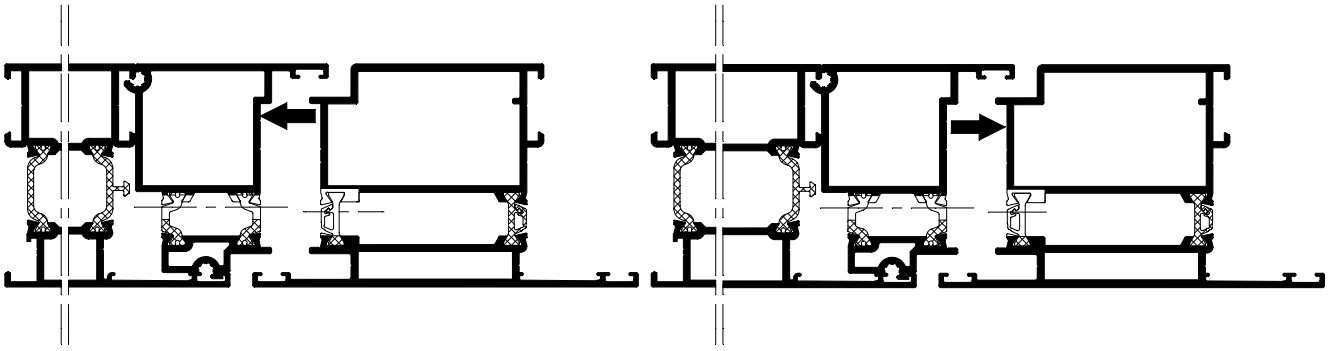

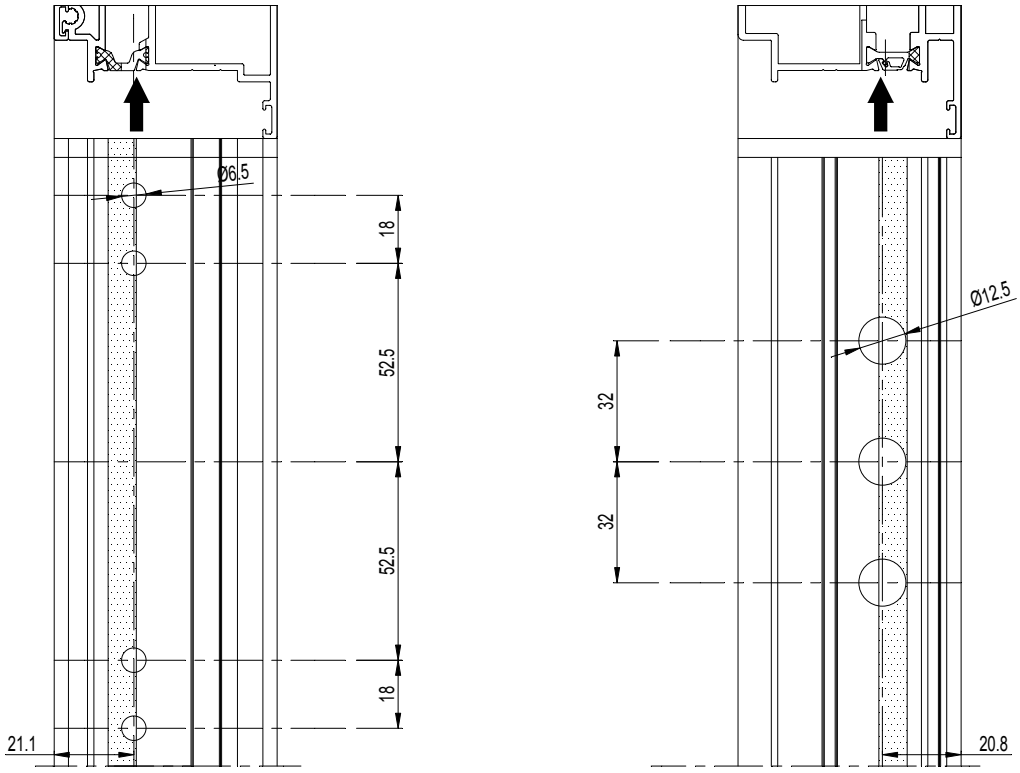

D0081931

DEURSCHARNIEREN ROLLENBAND
PAUMELLES PORTE ROLLENBAND
DOOR HINGES ROLLENBAND
TUERBAENDER ROLLENBAND

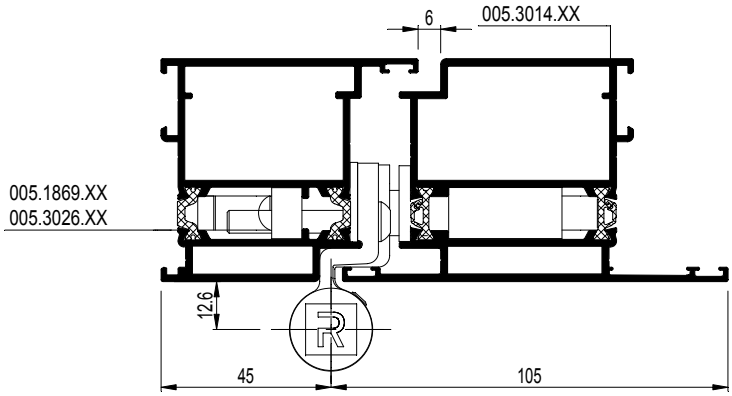

065.6385.XX	-- and	-- or	097.0684.00

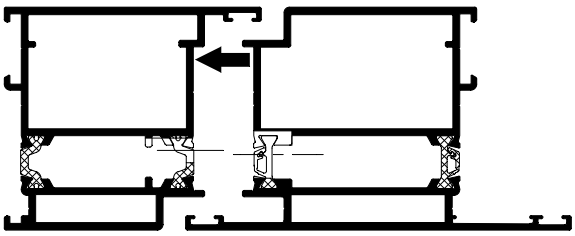

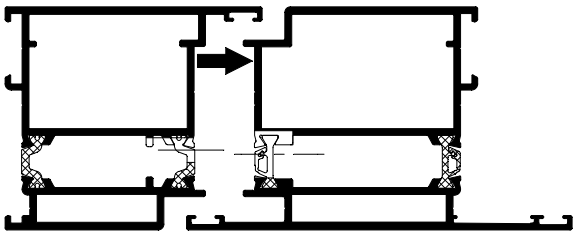

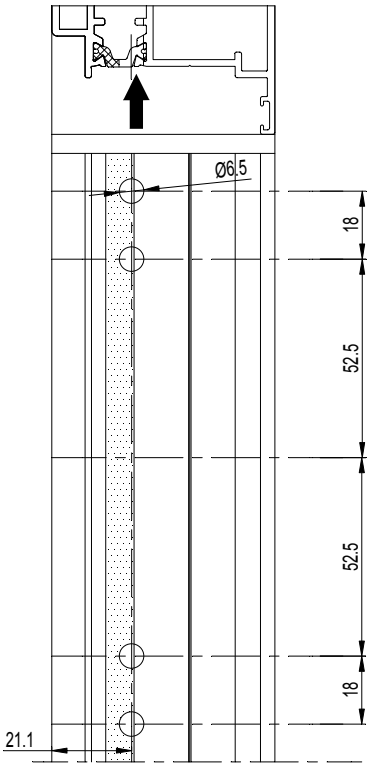

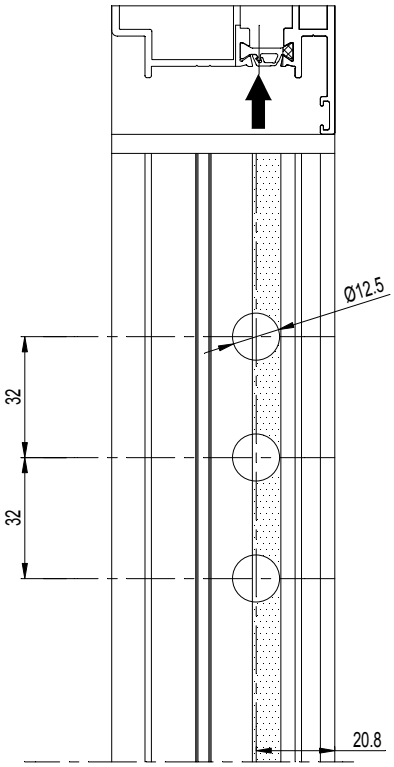

F

D0081931

CS 68-FP
EW 30

RAAMDEUREN MET BORSTELAFSLUITING
PORTES-FENETRES AVEC JOINT-BROSSE
WINDOW-DOORS WITH BRUSH
FENSTERTUEREN MIT BUERSTENDICHTUNG

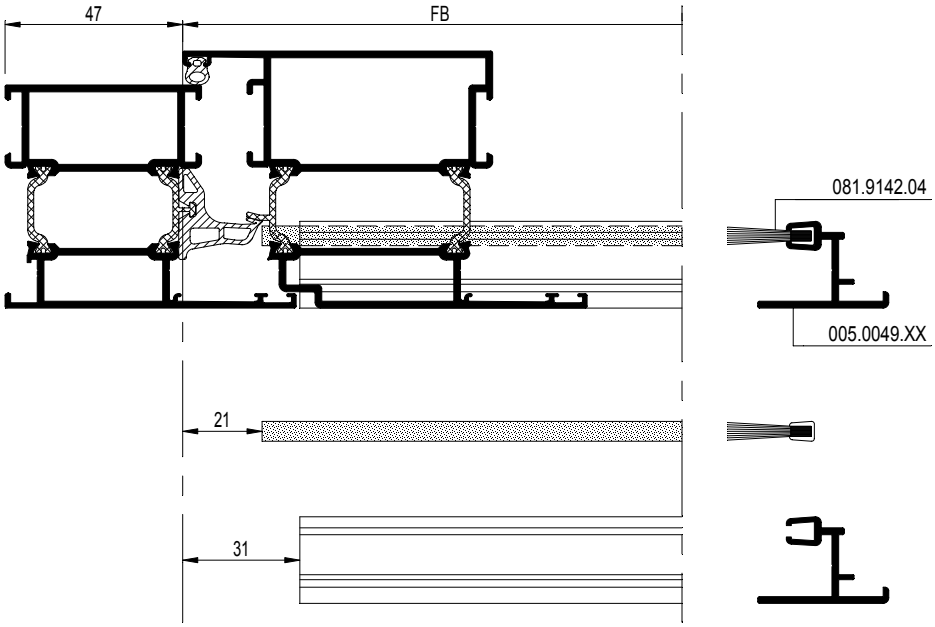

schaal - échelle
scale - Maßstab
1/2

D0081933

F

CS 68-FP
EW 30

RAAMDEUREN MET BORSTELAFSLUITING
PORTES-FENETRES AVEC JOINT-BROSSE
WINDOW-DOORS WITH BRUSH
FENSTERTUEREN MIT BUERSTENDICHTUNG

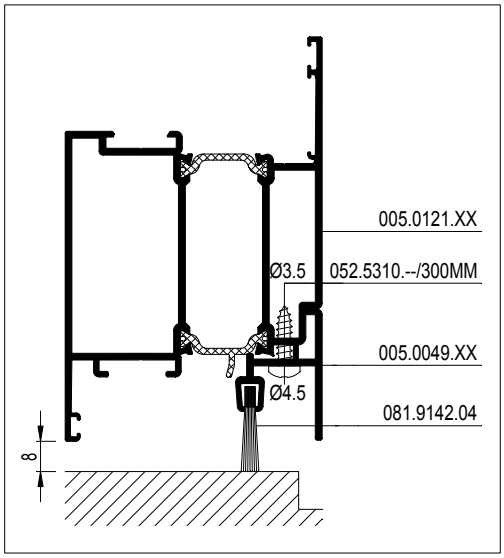

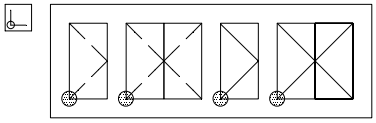

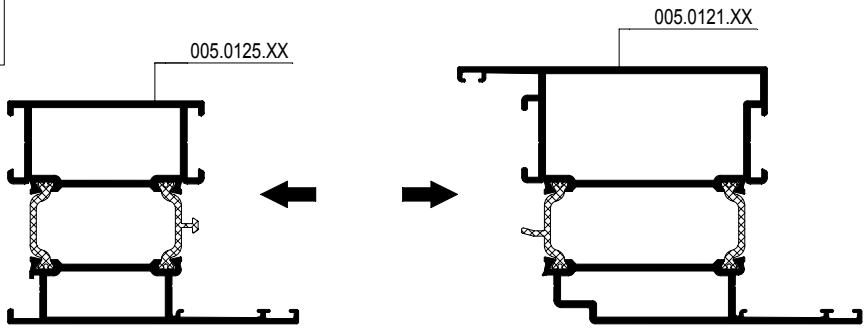

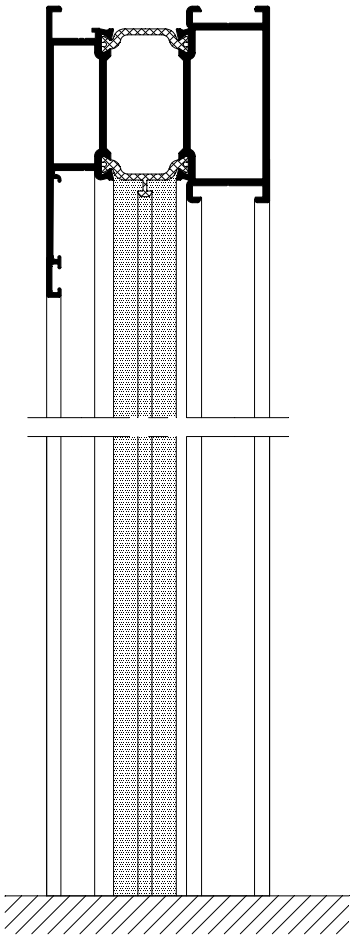

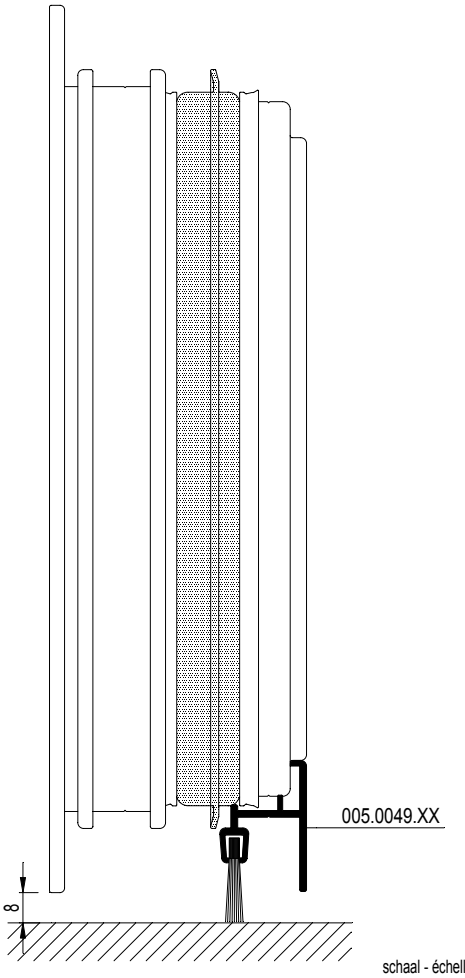

schaal - échelle
scale - Maßstab
1/2

D0081933

F

CS 68-FP
EW 30

RAAMDEUREN MET BORSTELAFSLUITING
PORTES-FENETRES AVEC JOINT-BROSSE
WINDOW-DOORS WITH BRUSH
FENSTERTUEREN MIT BUERSTENDICHTUNG

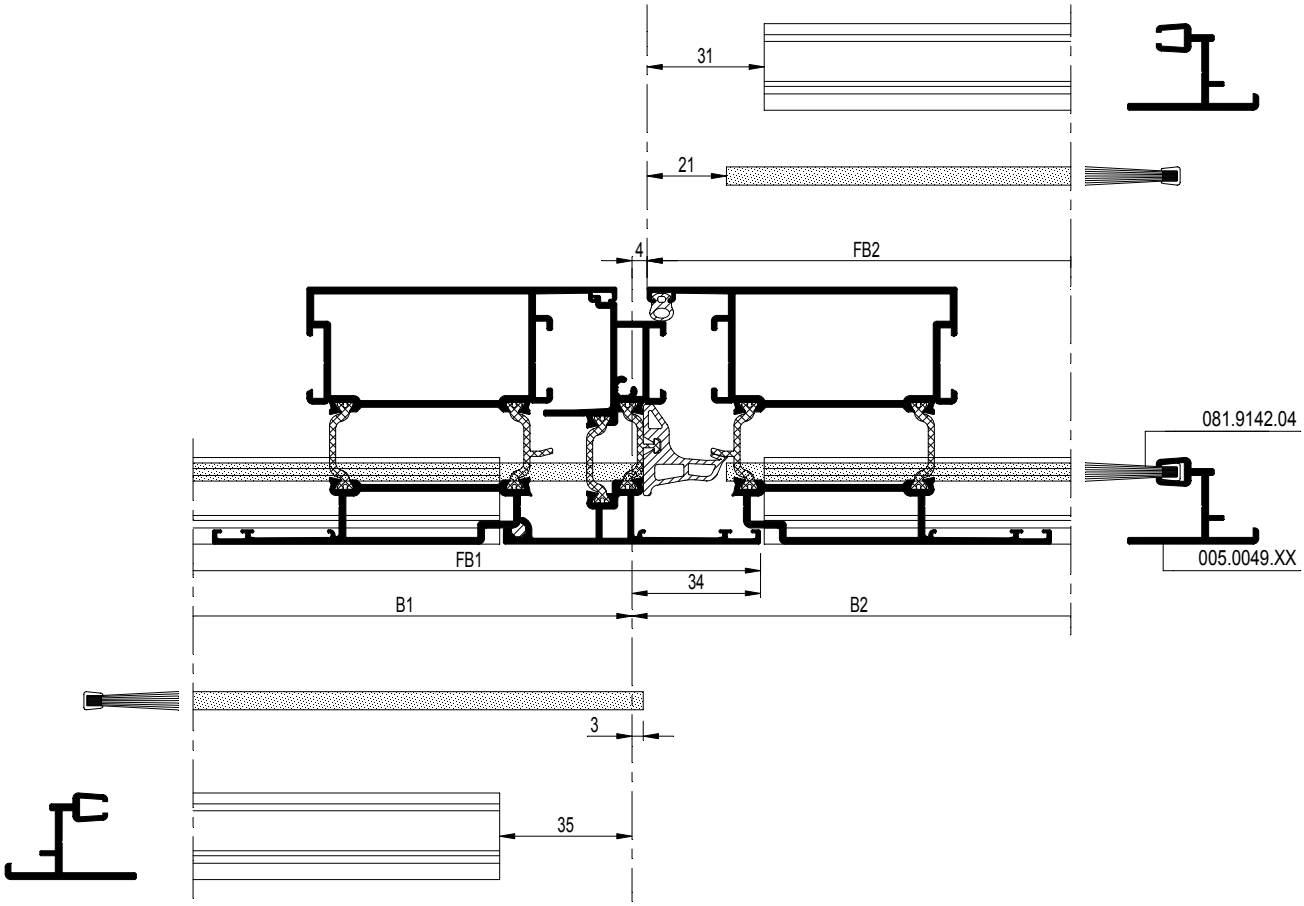

schaal - échelle
scale - Maßstab
1/2

D0081934

F

CS 68-FP
EW 30

RAAMDEUREN MET BORSTELAFSLUITING
PORTES-FENETRES AVEC JOINT-BROSSE
WINDOW-DOORS WITH BRUSH
FENSTERTUEREN MIT BUERSTENDICHTUNG

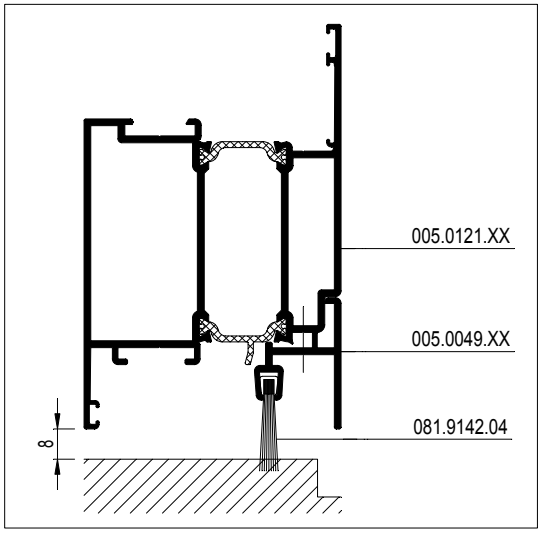

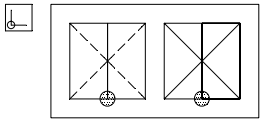

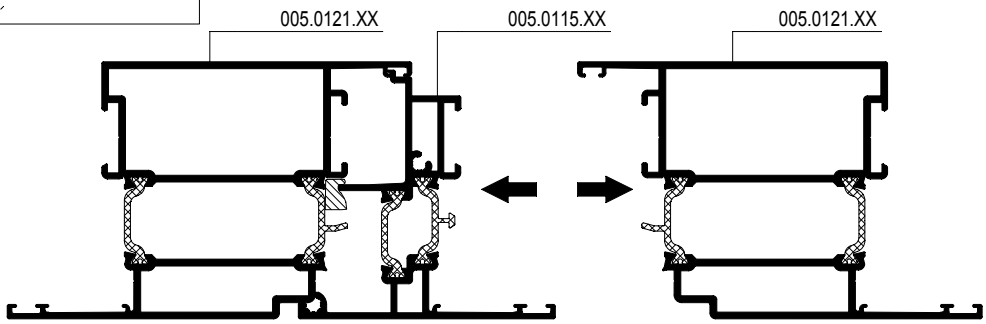

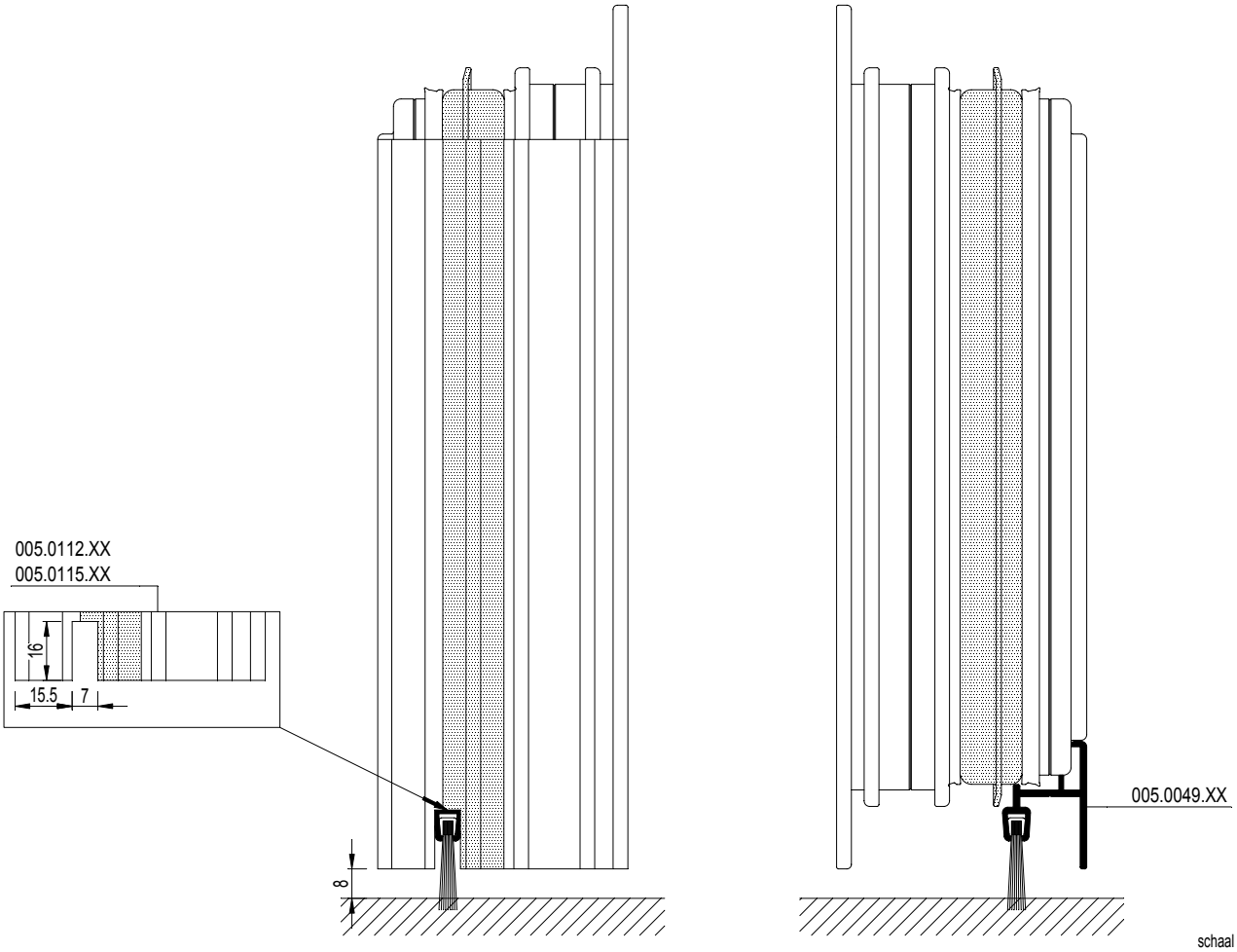

schaal - échelle
scale - Maßstab
1/2

D0081934

F

CS 68-FP
EW 30

DEUR MET BORSTELAFSLUITING
JOINT-BROSSE PORTES
BRUSH DOORS
BUERSTENDICHTUNG TUEREN

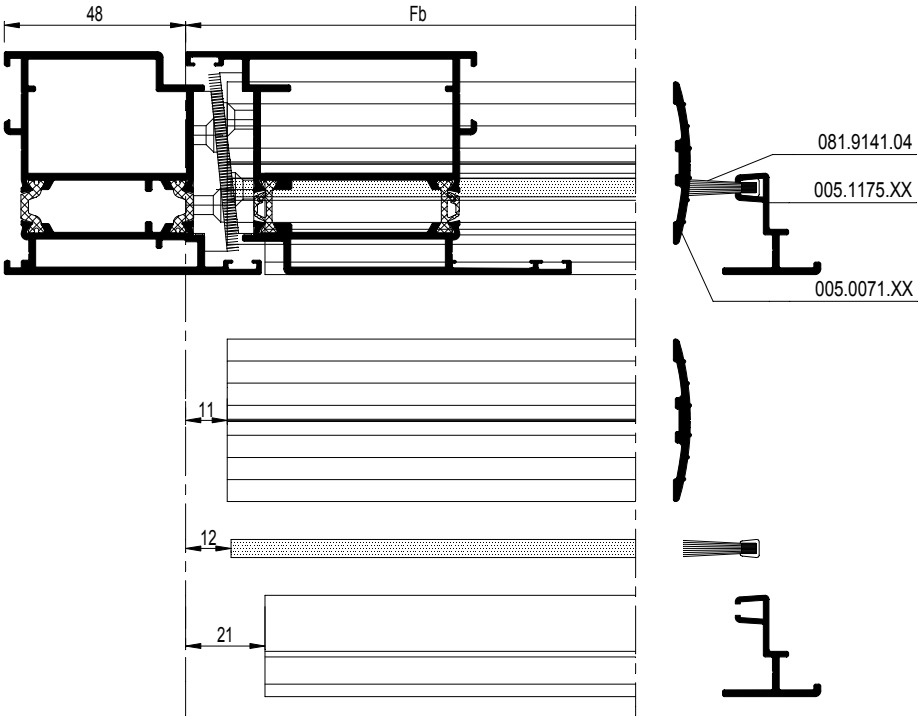

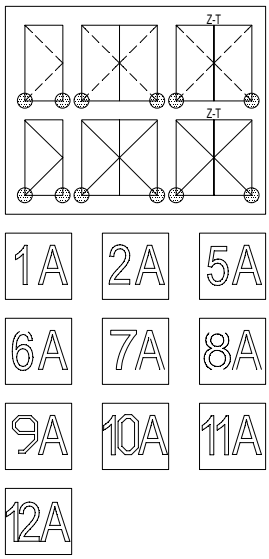

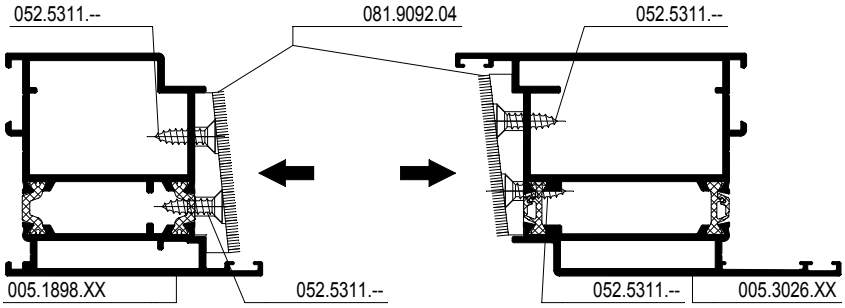

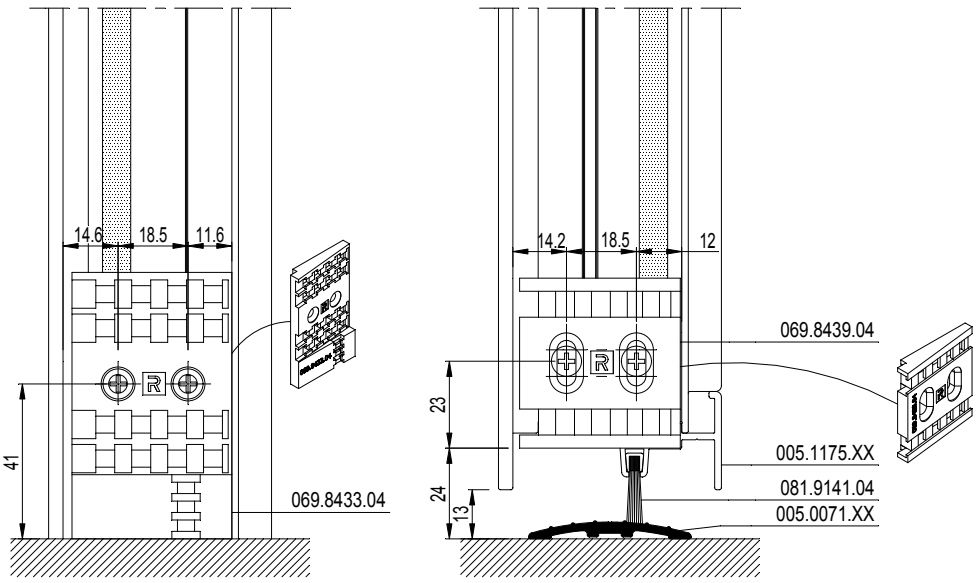

schaal - échelle
scale - Maßstab
1/2

D0081935

F

CS 68-FP
EW 30

SAMENGESTELDE DEUR MET BORSTELAFSLUITING
JOINT-BROSSE PORTE COMPOSEE
COMBINED DOOR WITH BRUSH
KOMBINIERTE TUER MIT BUERSTENDICHTUNG

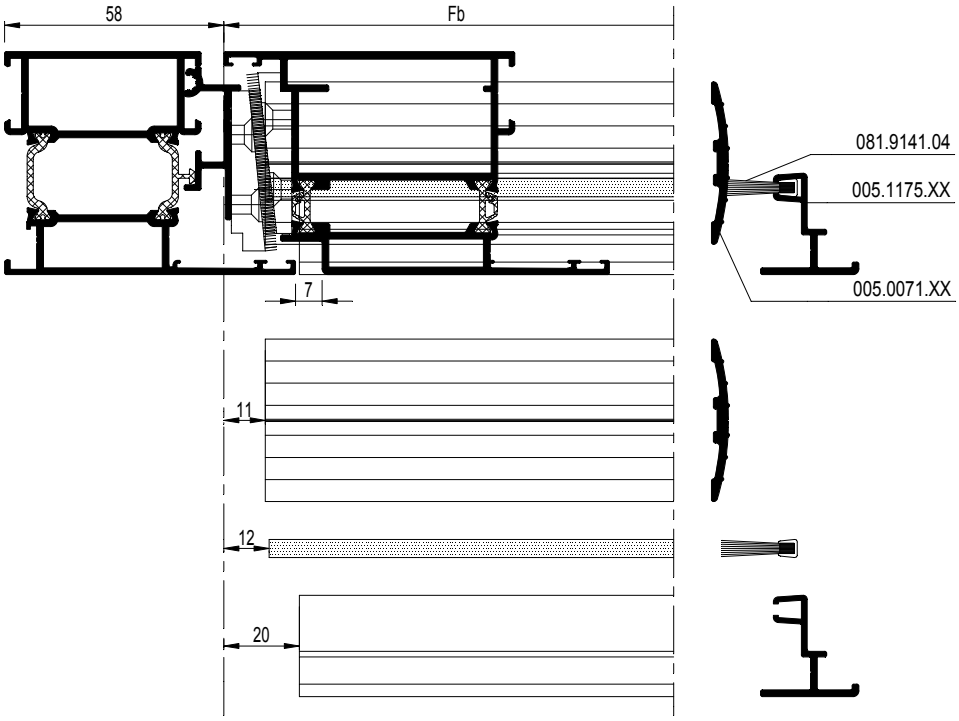

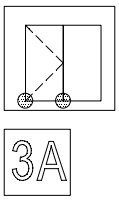

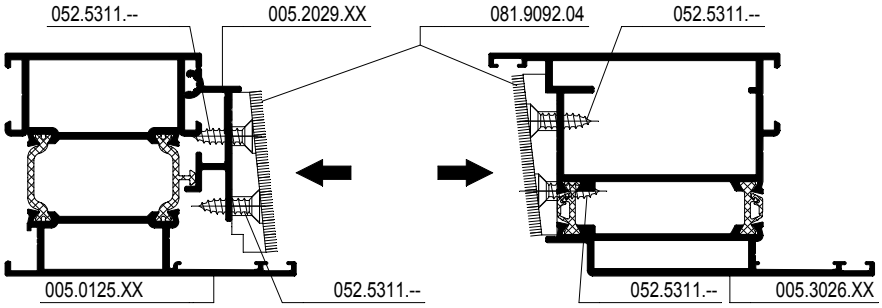

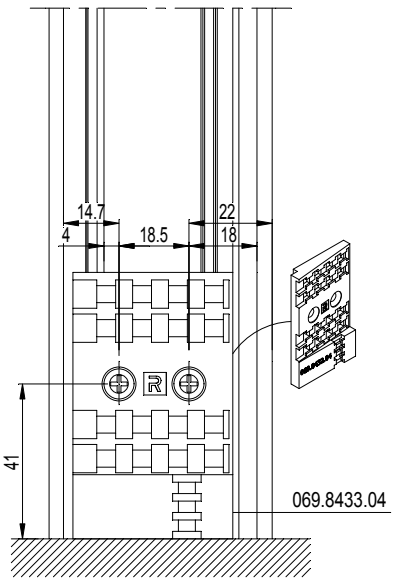

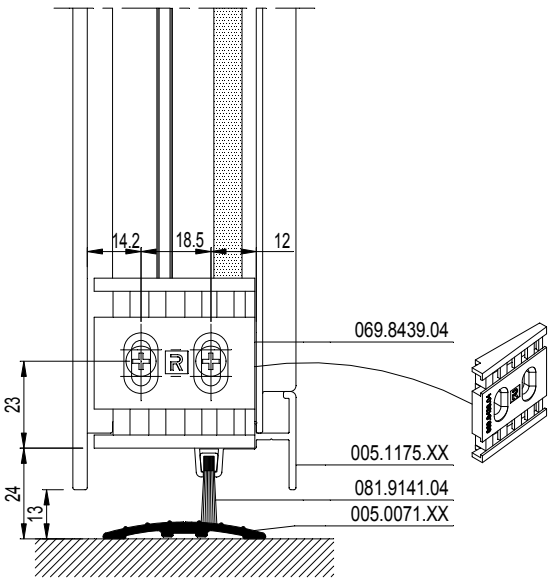

schaal - échelle
scale - Maßstab
1/2

D0081935

F

SAMENGESTELDE DEUR MET BORSTELAFSLUITING
JOINT-BROSSE PORTE COMPOSEE
COMBINED DOOR WITH BRUSH
KOMBINIERTE TUER MIT BUERSTENDICHTUNG

schaal - échelle
scale - Maßstab
1/2

D0081936

CS 68-FP
EW 30

SAMENGESTELDE DEUR MET BORSTELAFSLUITING
JOINT-BROSSE PORTE COMPOSEE
COMBINED DOOR WITH BRUSH
KOMBINIERTE TUER MIT BUERSTENDICHTUNG

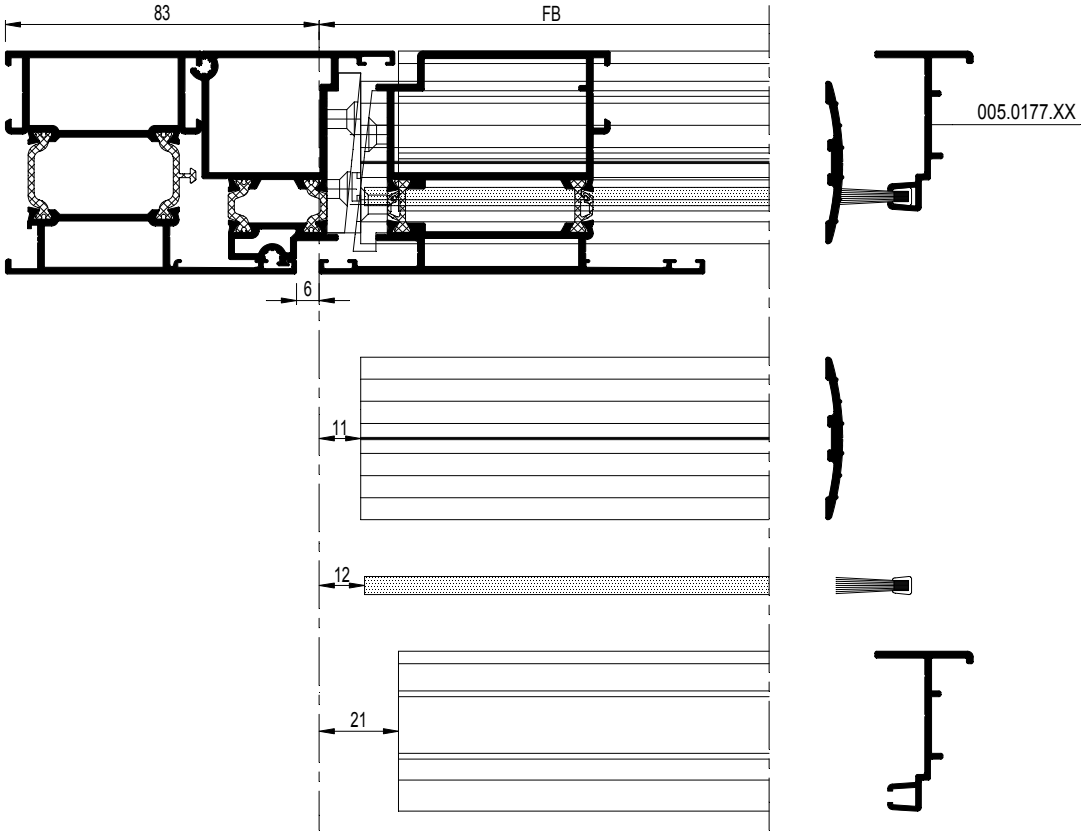

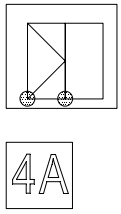

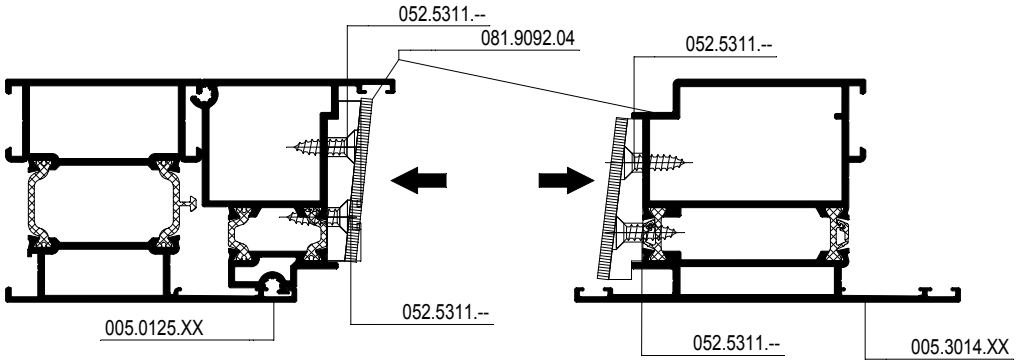

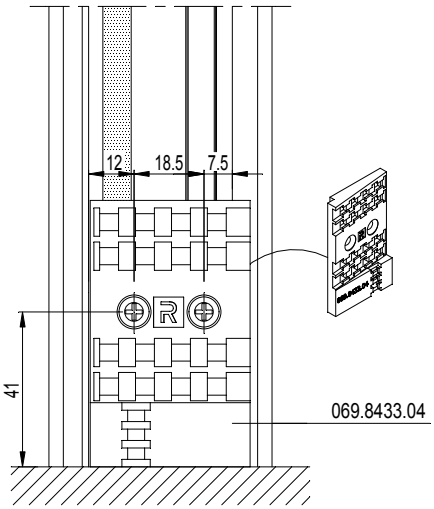

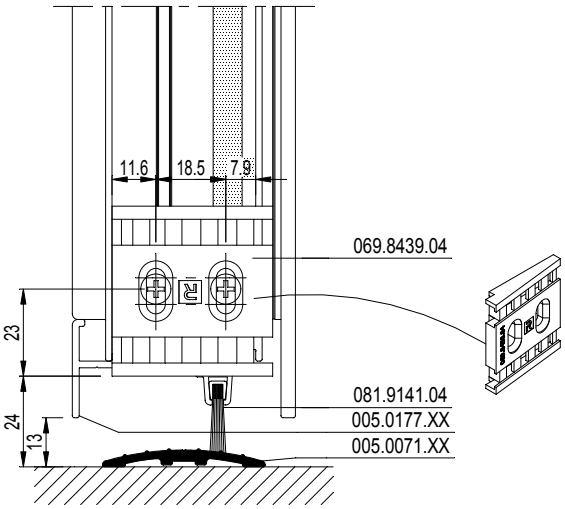

schaal - échelle
scale - Maßstab
1/2

D0081936

F

CS 68-FP
EW 30

STOLPDEUR MET BORSTELAFSLUITING
JOINT-BROSSE PORTE DOUBLE
DOUBLE CASEMENT DOOR WITH BRUSH
STULPFLUEGELTUER MIT BUERSTENDICHTUNG

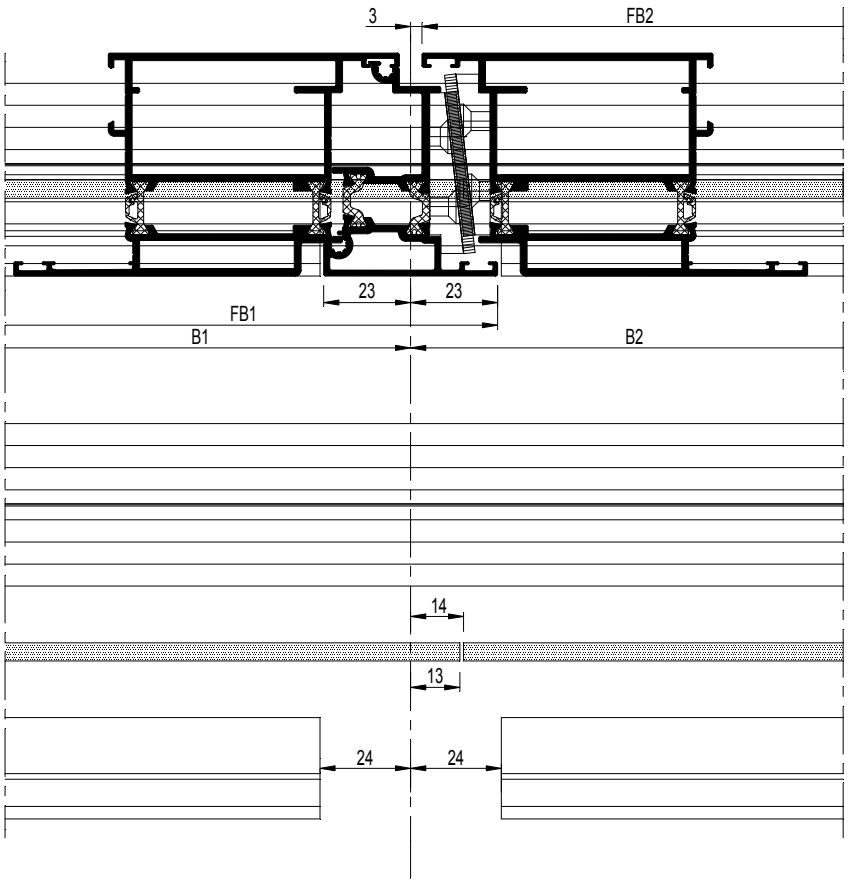

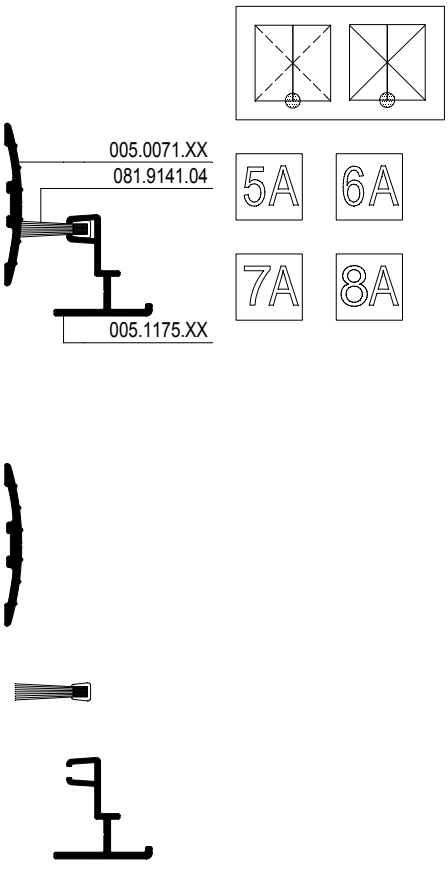

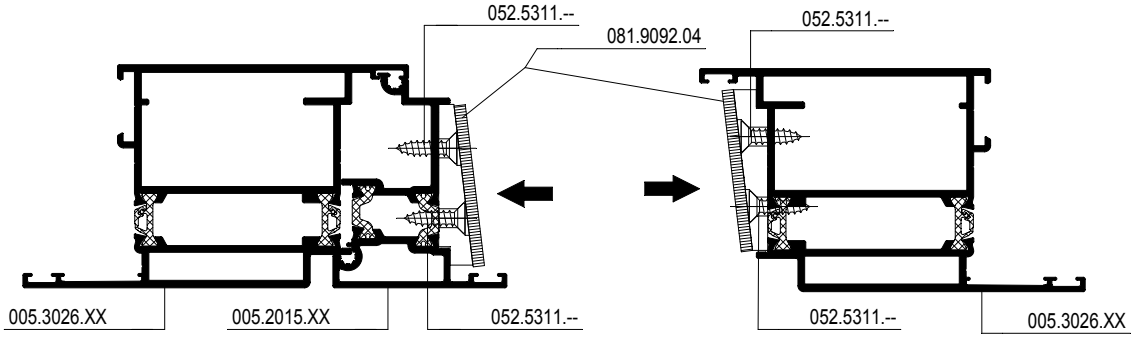

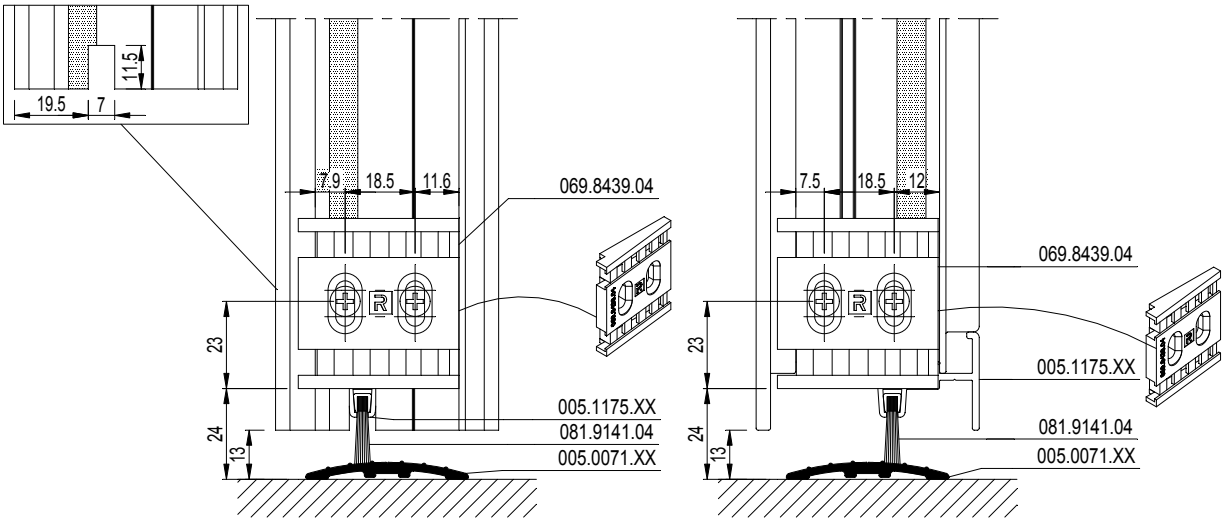

D0081937

F

CS 68-FP
EW 30

Z-T DEUR MET BORSTELAFSLUITING
JOINT-BROSSE PORTE Z-T
Z-T DOOR WITH BRUSH
Z-T TUER MIT BUERSTENDICHTUNG

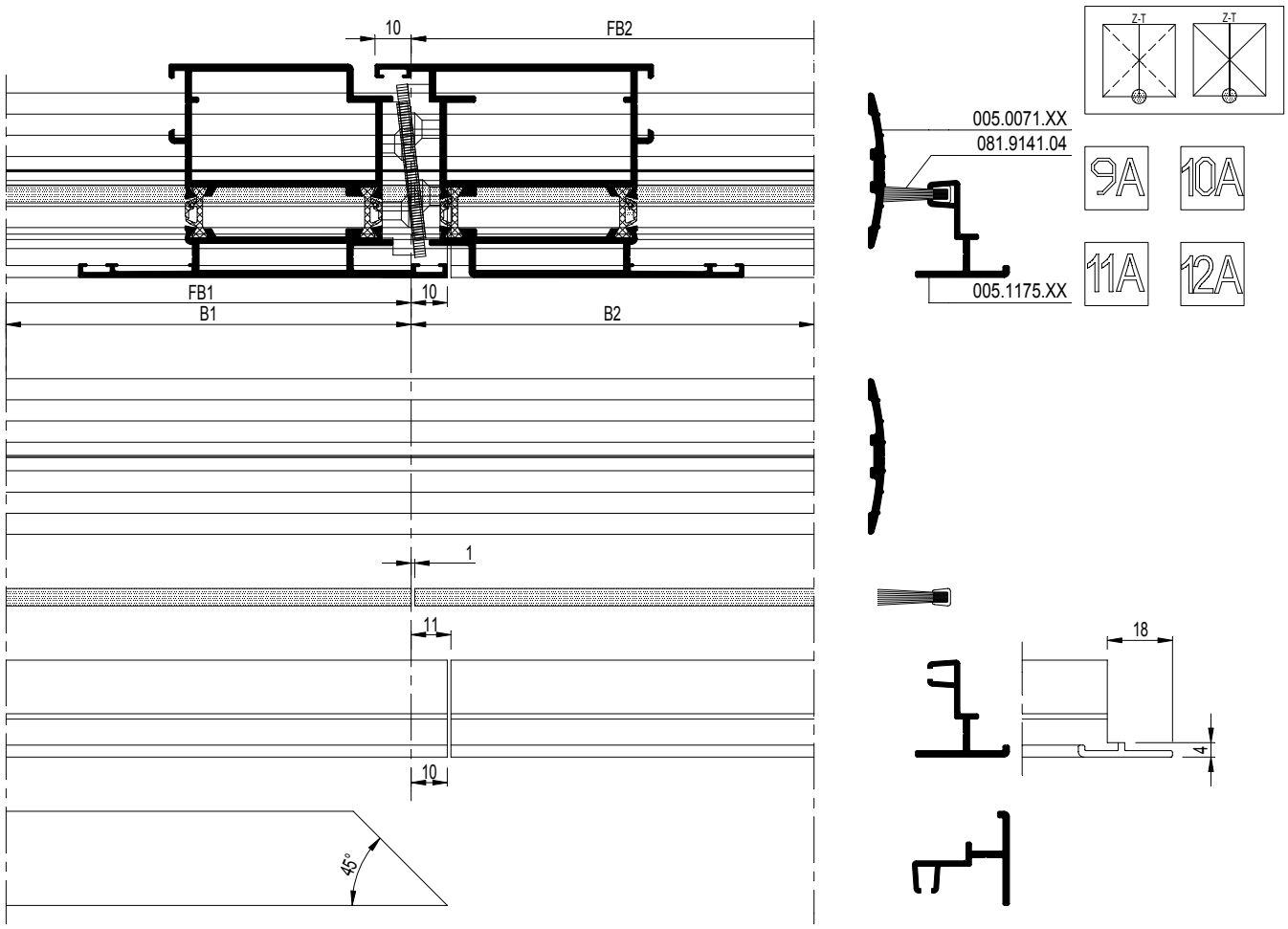

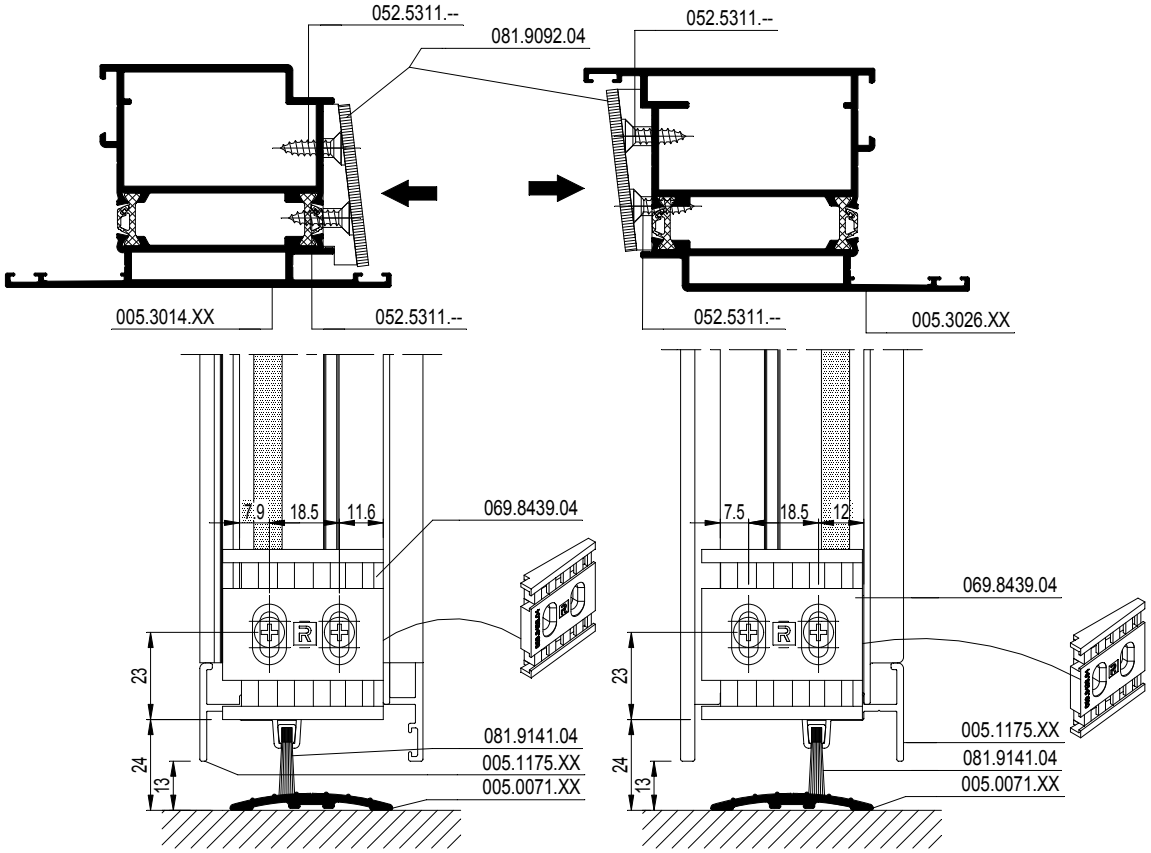

F

D0081937

CS 68-FP
EW 30

DEUR MET BORSTELAFSLUITING
JOINT-BROSSE PORTES
BRUSH DOORS
BUERSTENDICHTUNG TUEREN

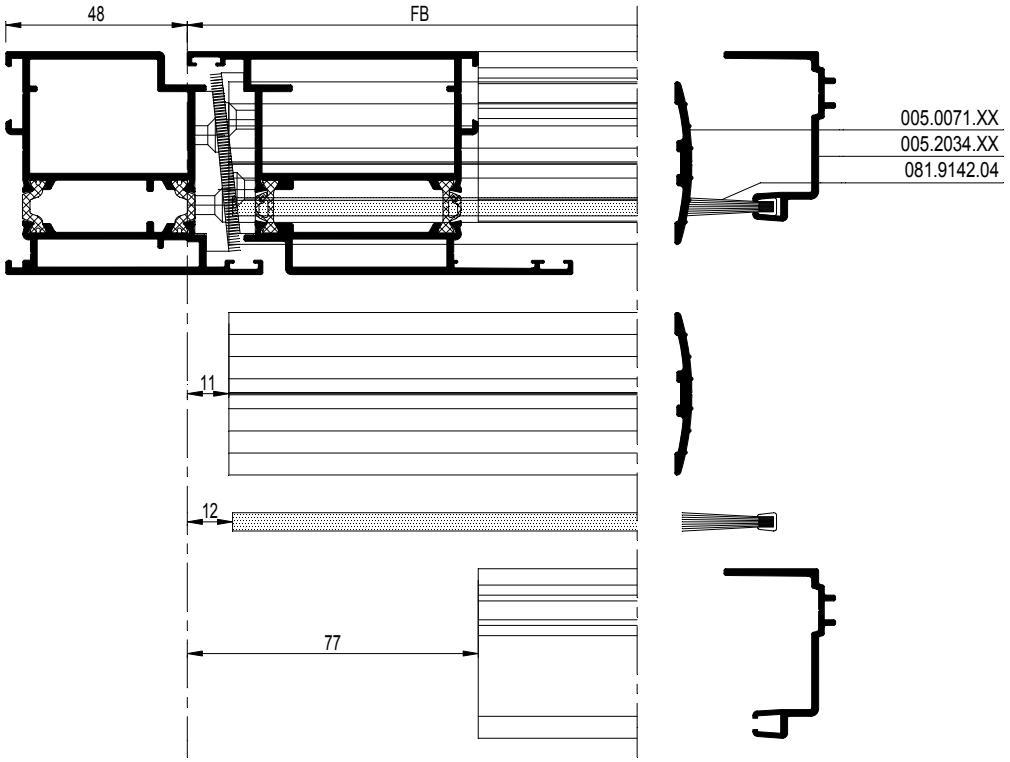

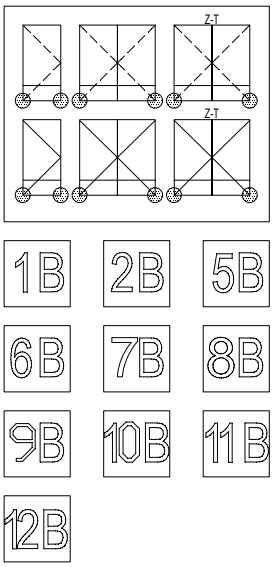

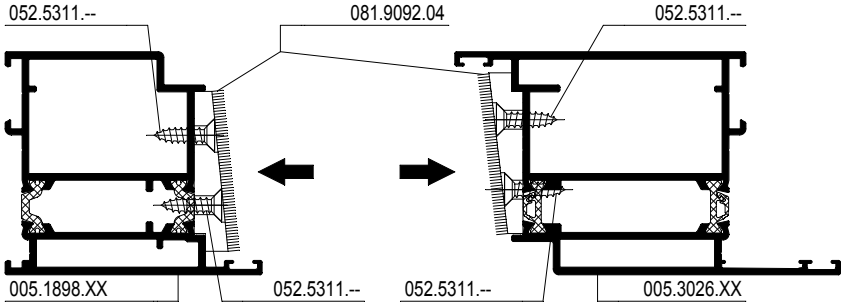

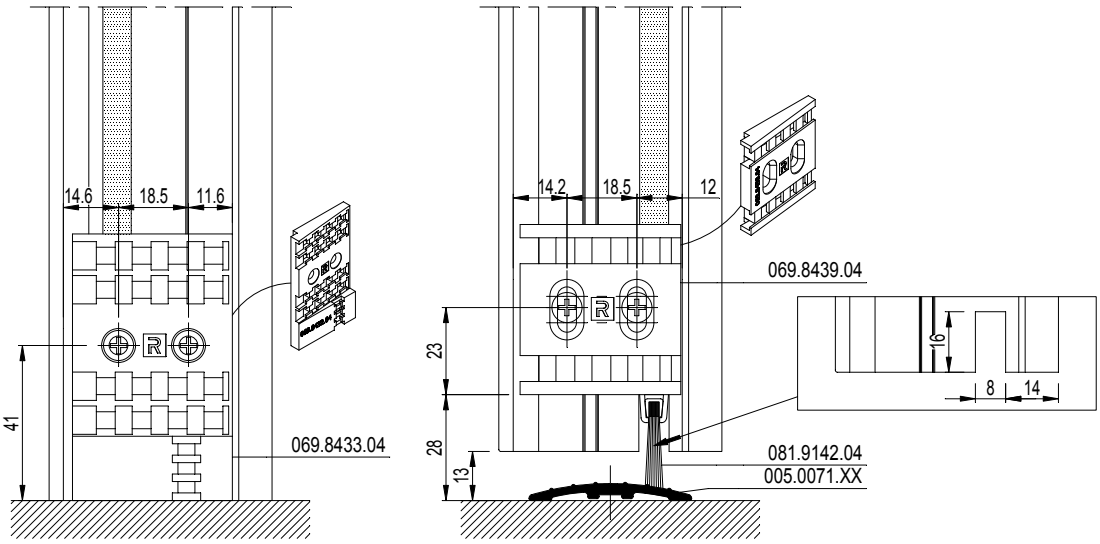

F

D0081939

CS 68-FP
EW 30

SAMENGESTELDE DEUR MET BORSTELAFSLUITING
JOINT-BROSSE PORTE COMPOSEE
COMBINED DOOR WITH BRUSH
KOMBINIERTE TUER MIT BUERSTENDICHTUNG

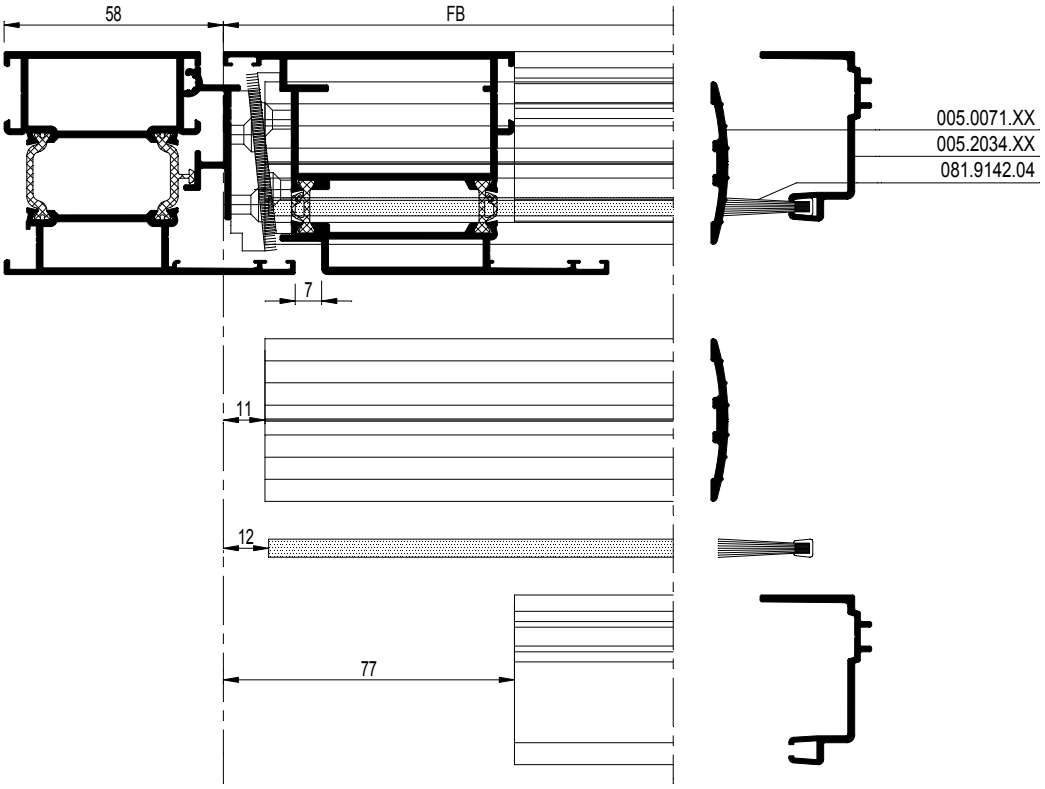

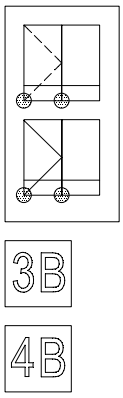

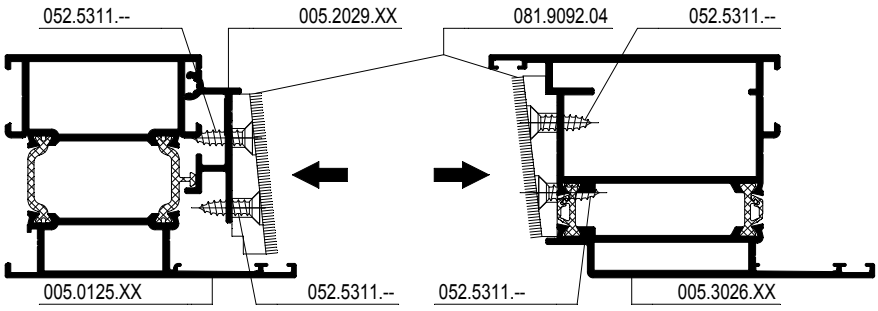

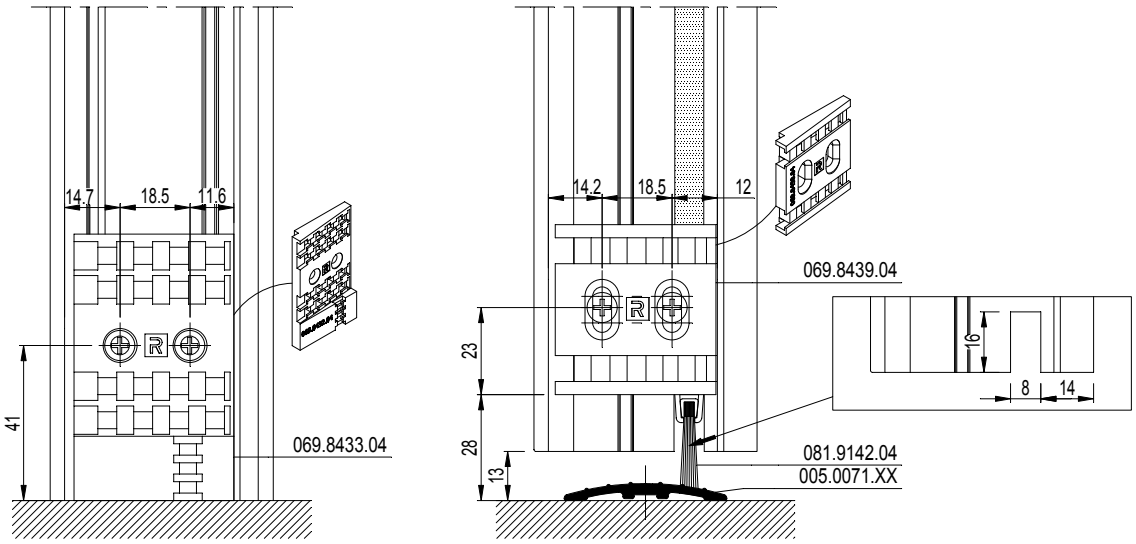

F

D0081939

CS 68-FP
EW 30

STOLPDEUR MET BORSTELAFSLUITING
JOINT-BROSSE PORTE DOUBLE
DOUBLE CASEMENT DOOR WITH BRUSH
STULPFLUEGELTUER MIT BUERSTENDICHTUNG

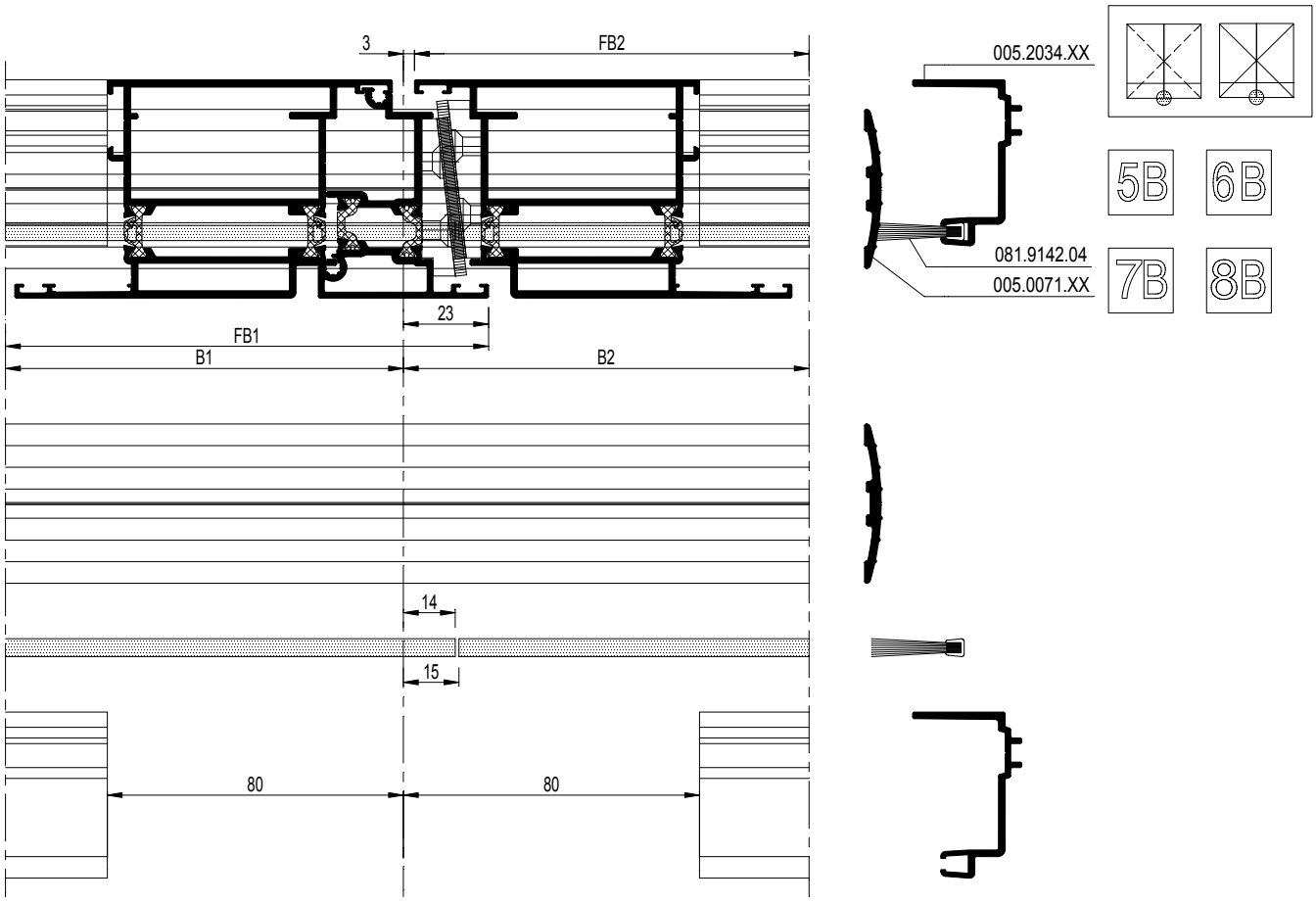

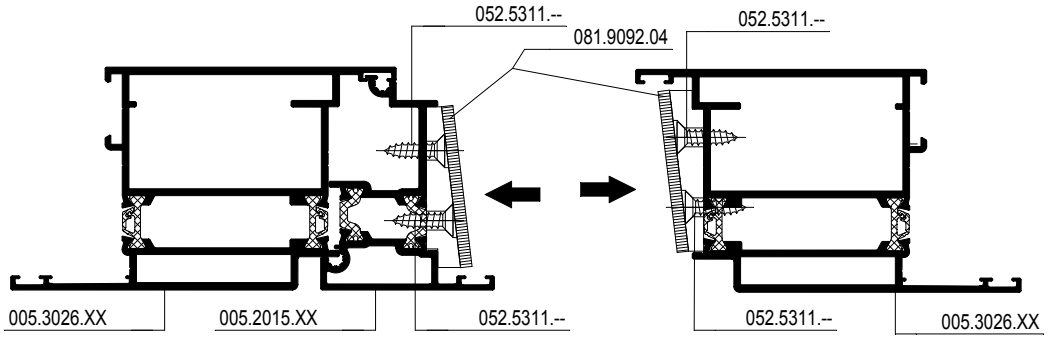

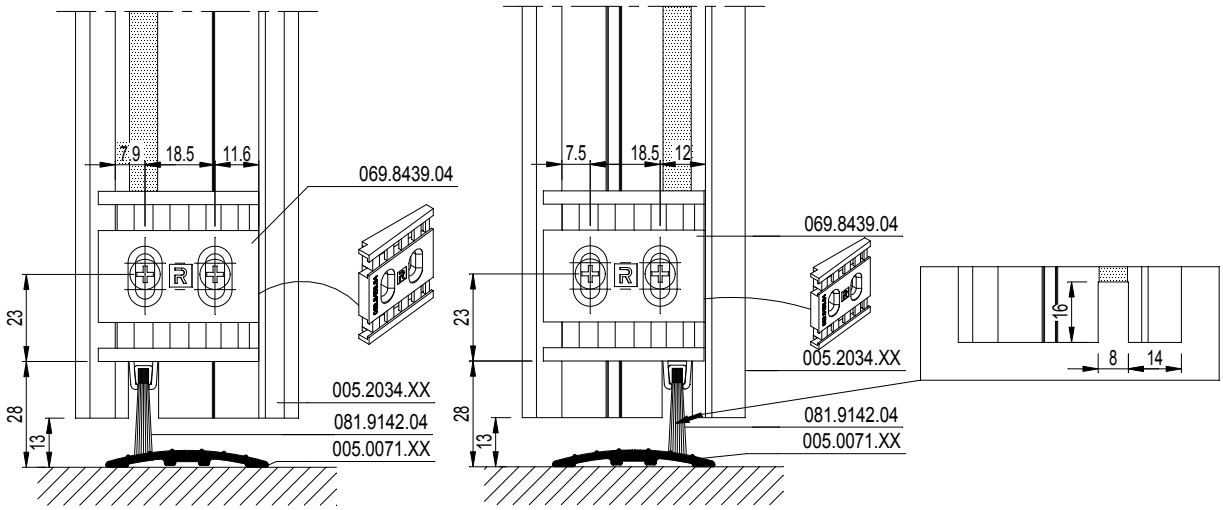

D0081940

F

CS 68-FP
EW 30

Z-T DEUR MET BORSTELAFSLUITING
JOINT-BROSSE PORTE Z-T
Z-T DOOR WITH BRUSH
Z-T TUER MIT BUERSTENDICHTUNG

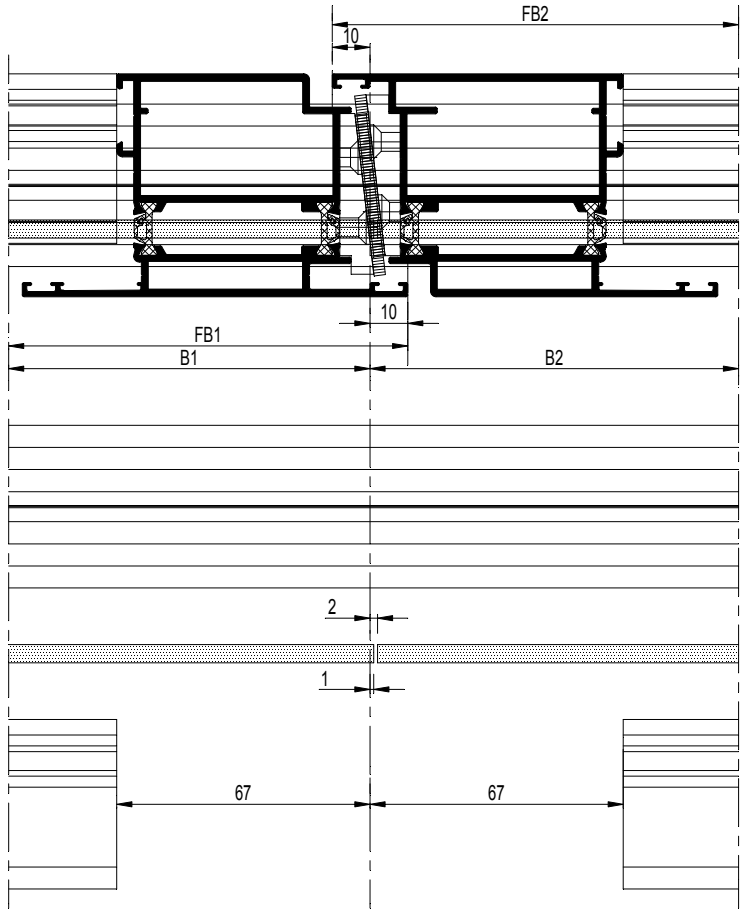

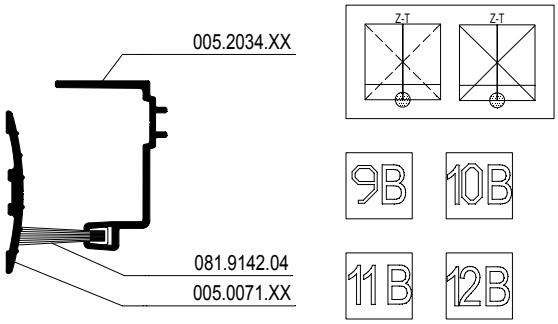

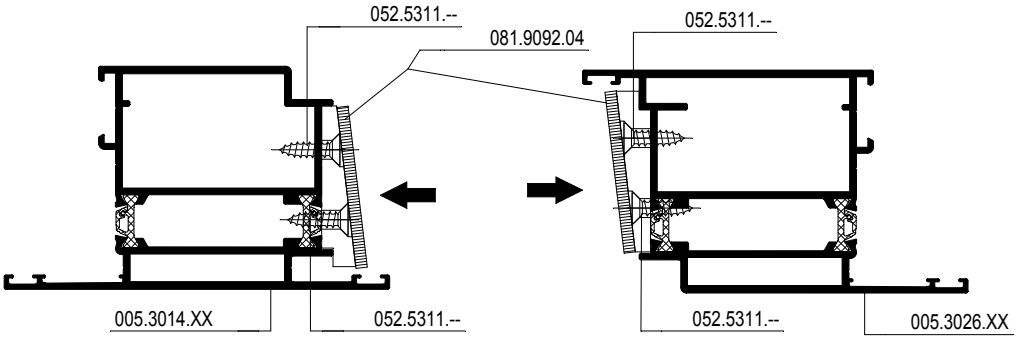

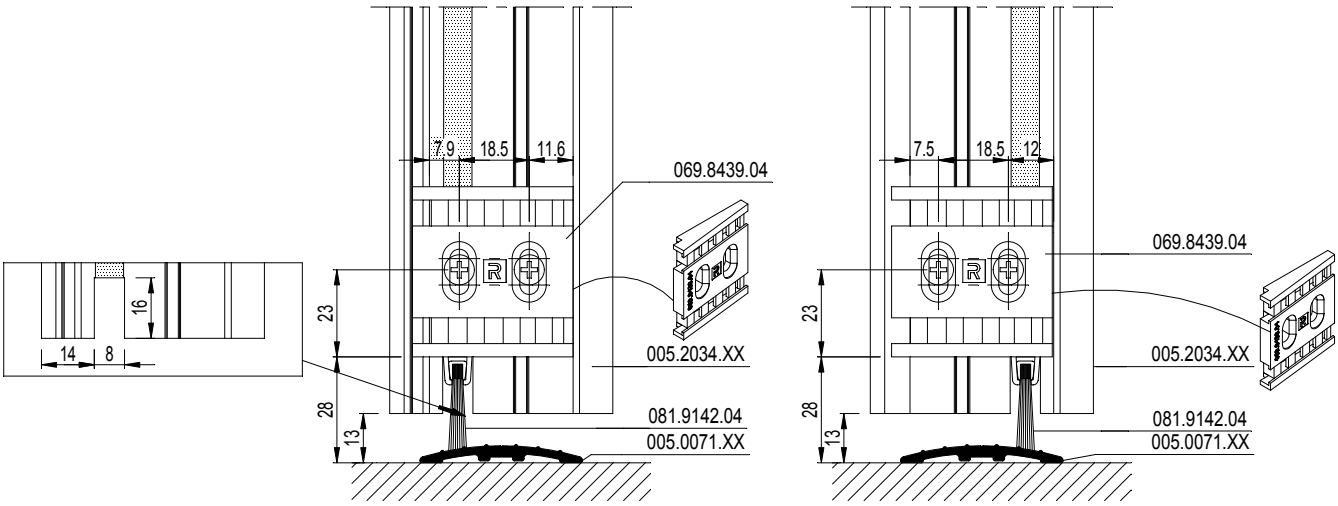

F

D0081940

DEUR BINNENDR. MET DUBBELE AANSLAGDICHTING
PORTE AVEC DOUBLE JOINT DE BUTEE OUVR. VERS L'INT.
DOOR INWARD OPENING WITH DOUBLE WEATHER STRIP
TUER INNEN OEFFN. MIT DOPPELANSCHLAGDICHTUNG

D0081941

DEUR BINNENDR. MET DUBBELE AANSLAGDICHTING
PORTE AVEC DOUBLE JOINT DE BUTEE OUVR. VERS L'INT.
DOOR INWARD OPENING WITH DOUBLE WEATHER STRIP
TUER INNEN OEFFN. MIT DOPPELANSCHLAGDICHTUNG

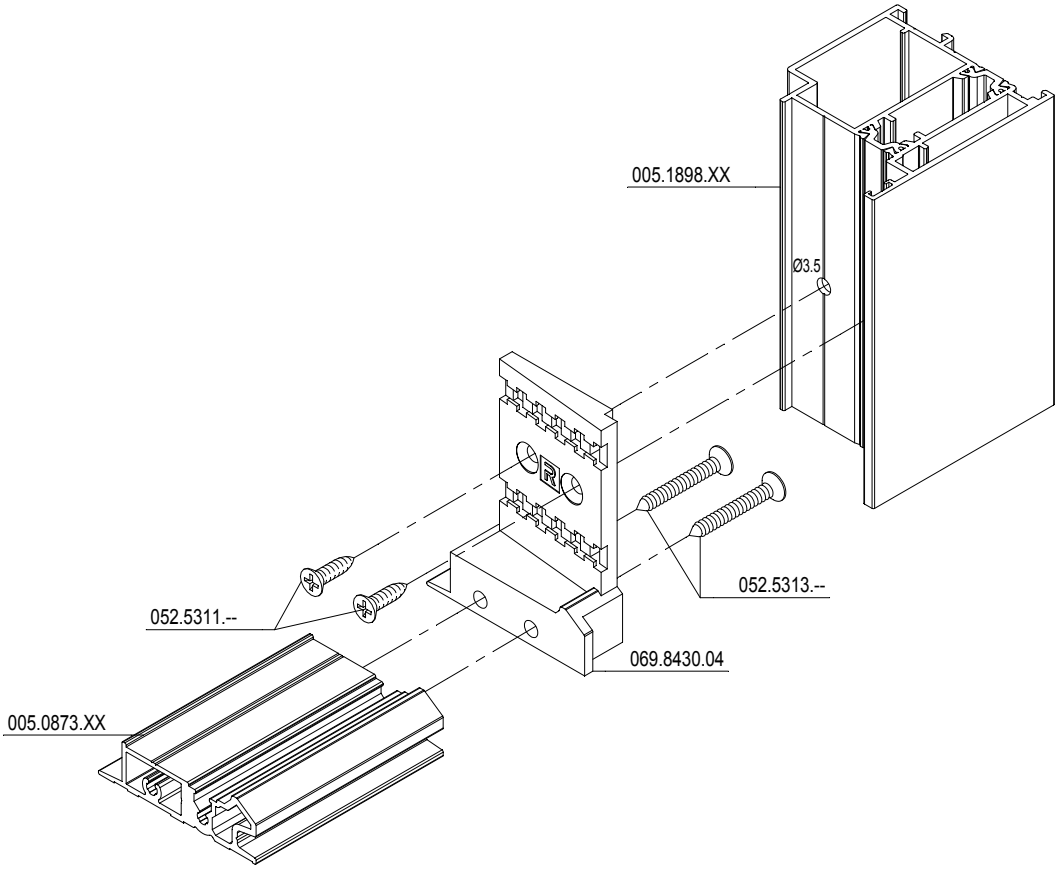

F

schaal - échelle
scale - Maßstab
1/2

D0081941

CS 68-FP
EW 30

DEUR BINNENDR. MET DUBBELE AANSLAGDICHTING
PORTE AVEC DOUBLE JOINT DE BUTEE OUVR. VERS L'INT.
DOOR INWARD OPENING WITH DOUBLE WEATHER STRIP
TUER INNEN OEFFN. MIT DOPPELANSCHLAGDICHTUNG

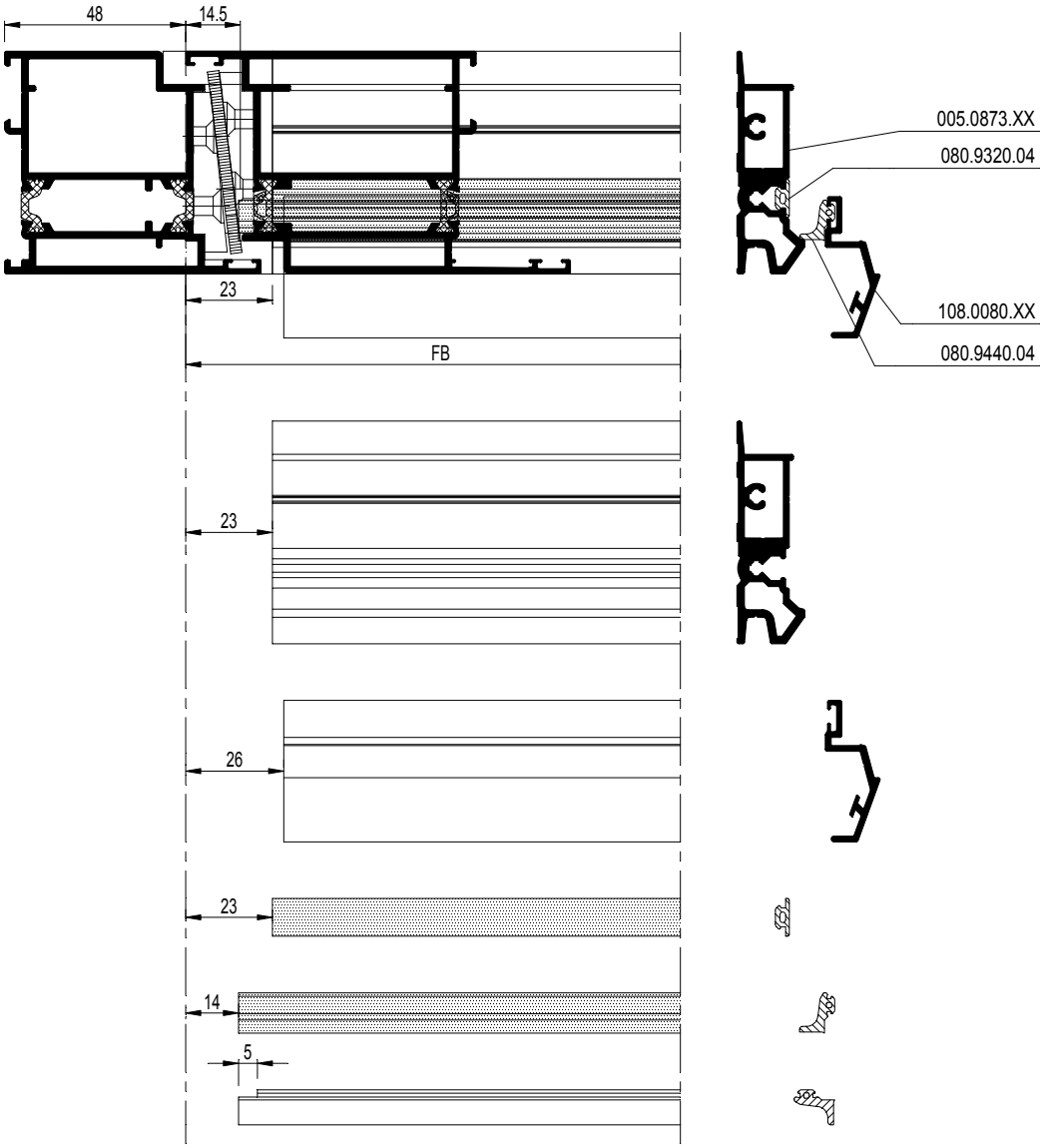

schaal - échelle
scale - Maßstab
1/2

D0081942

F

CS 68-FP
EW 30

DEUR BINNENDR. MET DUBBELE AANSLAGDICHTING
PORTE AVEC DOUBLE JOINT DE BUTEE OUVR. VERS L'INT.
DOOR INWARD OPENING WITH DOUBLE WEATHER STRIP
TUER INNEN OEFFN. MIT DOPPELANSCHLAGDICHTUNG

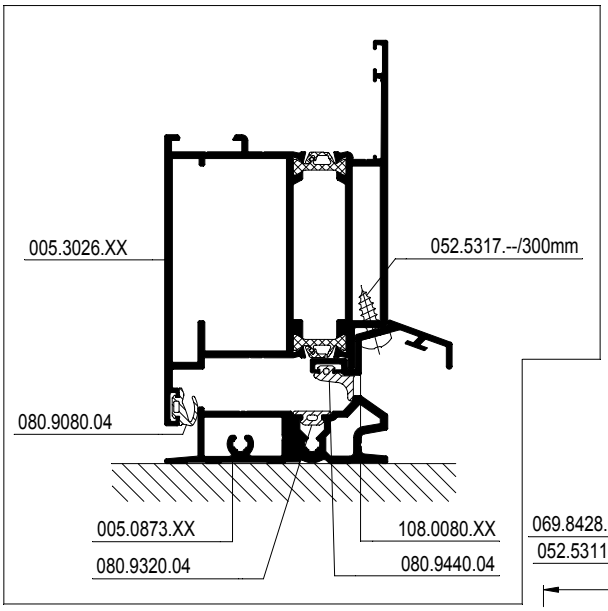

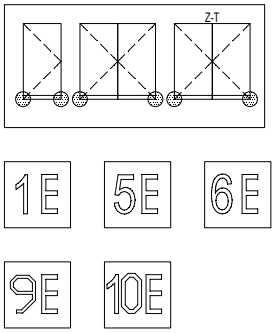

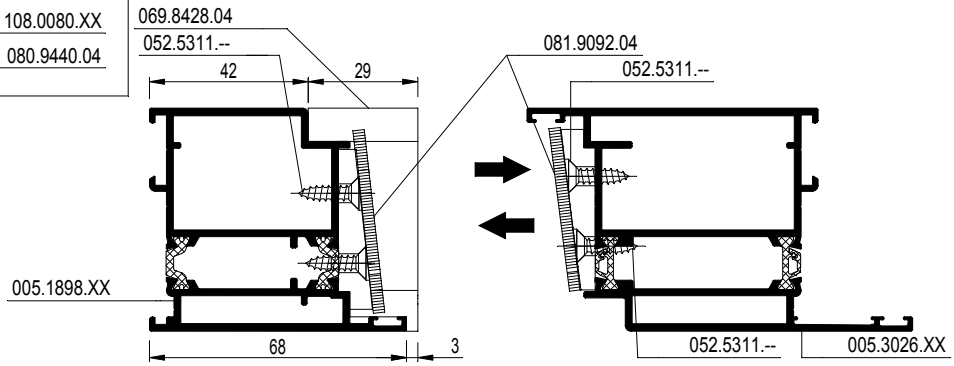

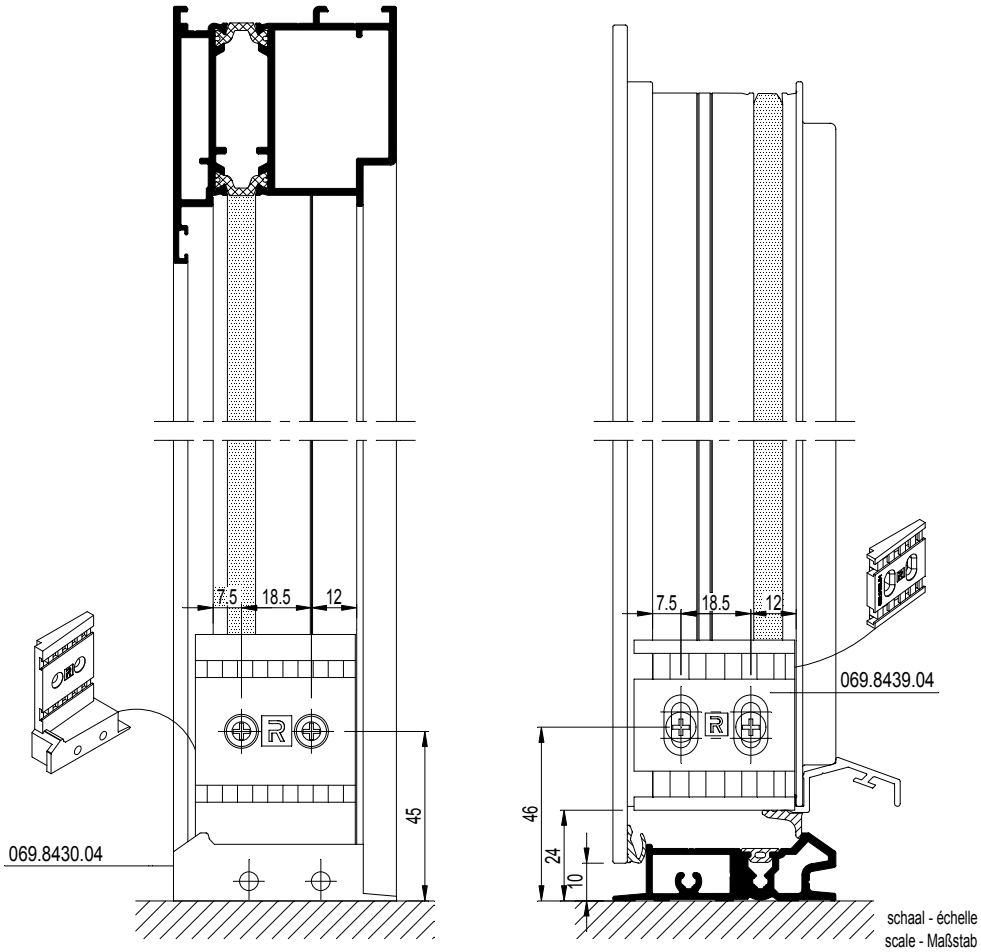

schaal - échelle
scale - Maßstab
1/2

D0081942

F

CS 68-FP
EW 30

SAMENGEST. DEUR BINNENDR. MET DUBBELE AANSLAGDICHTING
PORTE COMPOSEE OUVR. VERS L'INT. AVEC DOUBLE JOINT DE BUTEE
COMBINED DOOR INWARD OPENING WITH DOUBLE WEATHER STRIP
KOMB. TUER NACH IN. OEFFN. MIT DOPPELANSCHLAGDICHTUNG

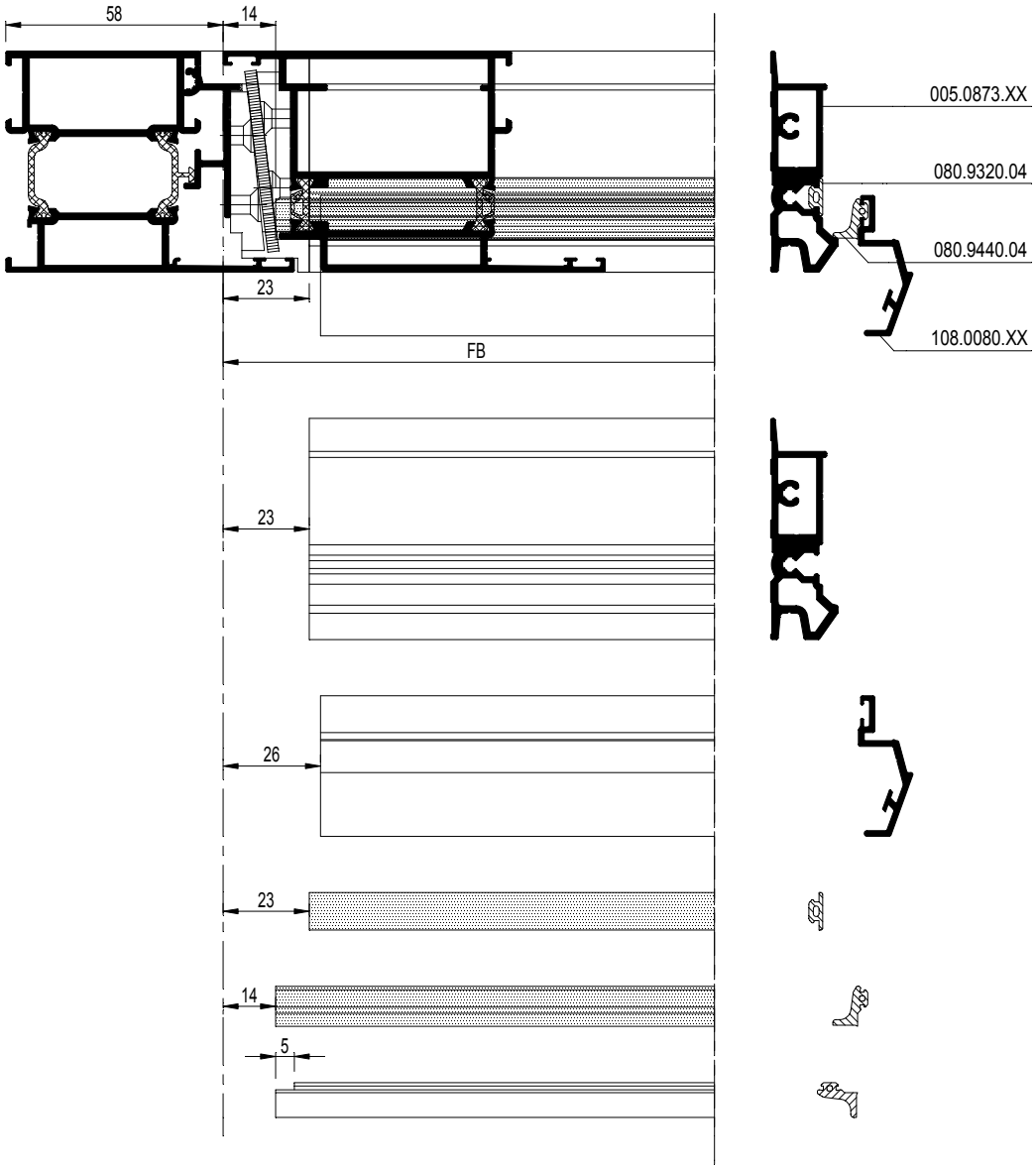

F

schaal - échelle
scale - Maßstab
1/2

D0081943

CS 68-FP
EW 30

SAMENGEST. DEUR BINNENDR. MET DUBBELE AANSLAGDICHTING
PORTE COMPOSEE OUVR. VERS L'INT. AVEC DOUBLE JOINT DE BUTEE
COMBINED DOOR INWARD OPENING WITH DOUBLE WEATHER STRIP
KOMB. TUER NACH IN. OEFFN. MIT DOPPELANSCHLAGDICHTUNG

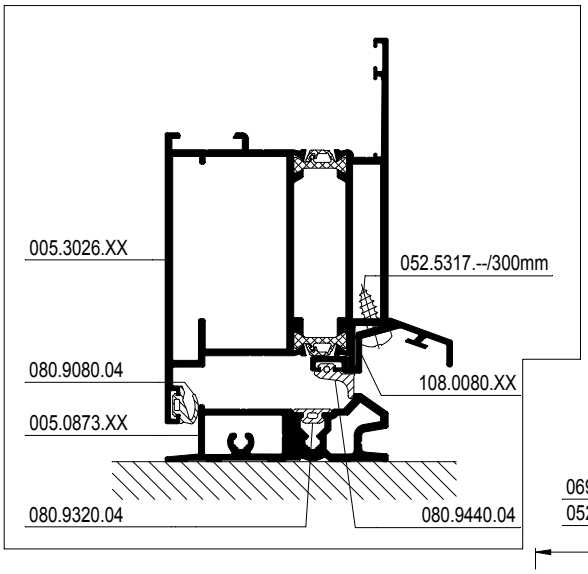

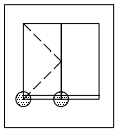

3E

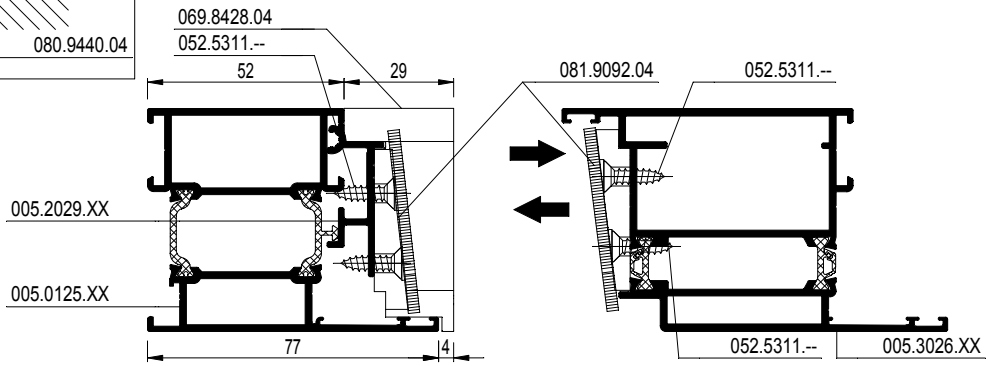

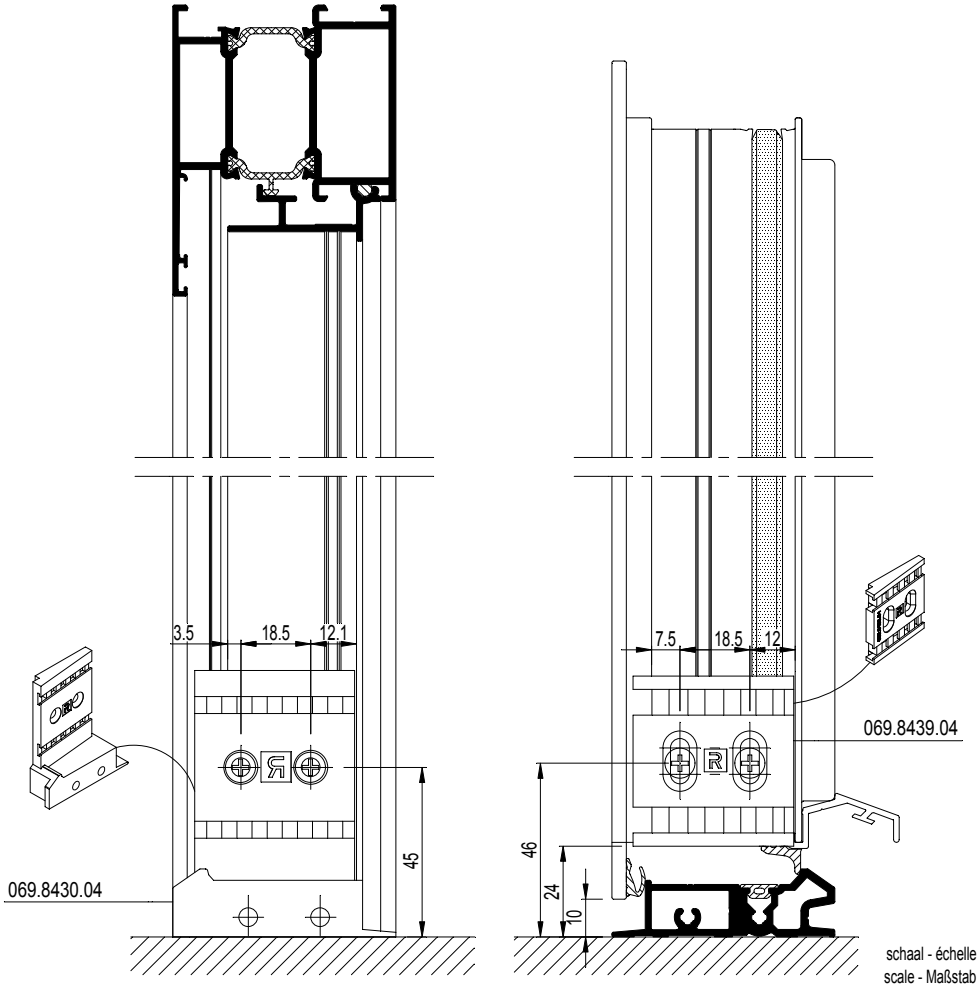

schaal - échelle
scale - Maßstab
1/2

D0081943

F

CS 68-FP
EW 30

STOLPDEUR BINNENDRAAIEND MET DUBBELE AANSLAGDICHTING
PORTE DOUBLE AVEC D. JOINT DE BUTEE OUVR. V. L'INT.
DOUBLE CASEM. D. INW. OPEN. WITH DOUB. WEATHER STRIP
STULPFL.TUER IN. OEFFN. MIT DOPPELANSCHLAGDICHTUNG

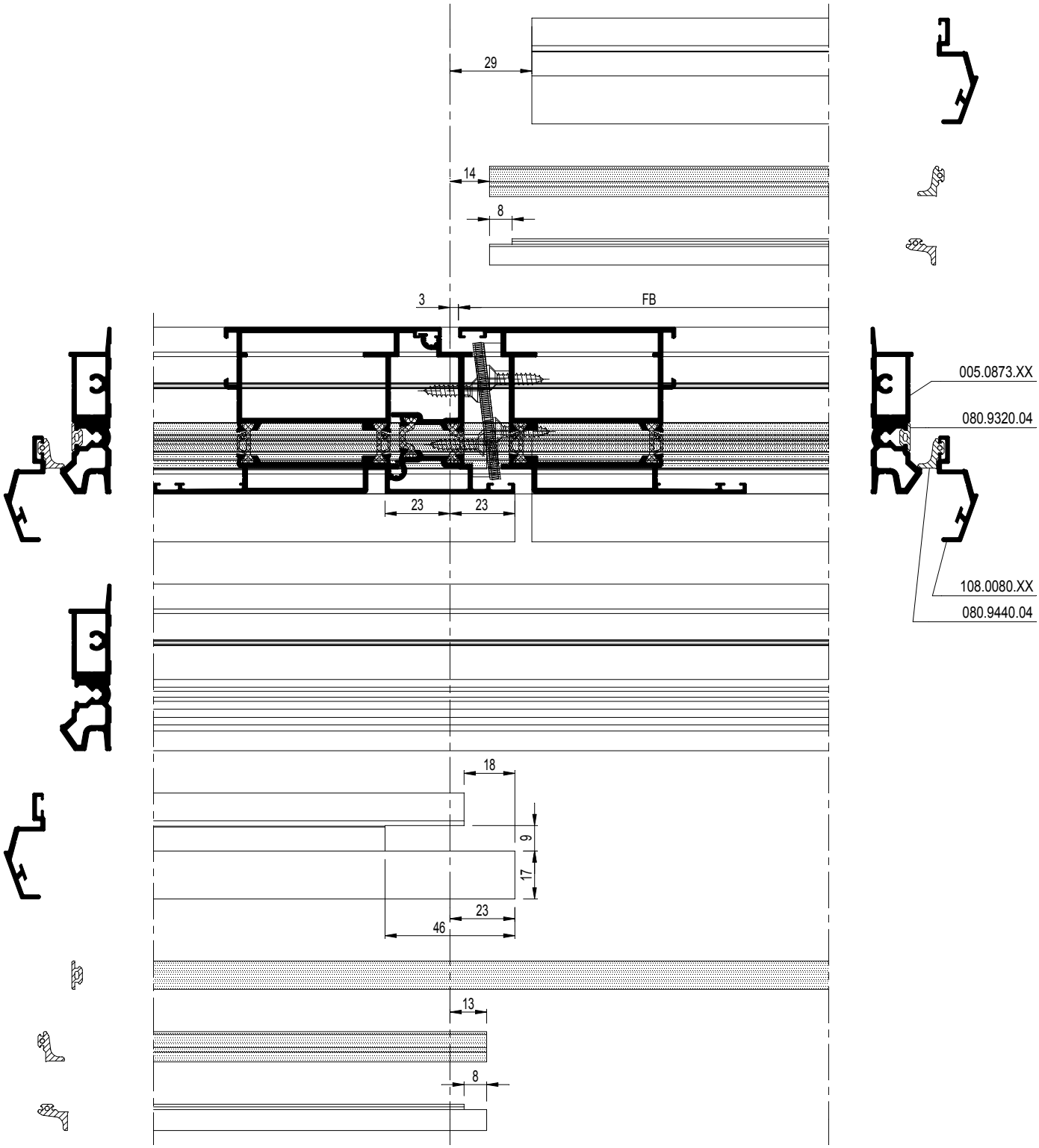

schaal - échelle
scale - Maßstab
1/2

D0081944

F

CS 68-FP
EW 30

STOLPDEUR BINNENDRAAIEND MET DUBBELE AANSLAGDICHTING
PORTE DOUBLE AVEC D. JOINT DE BUTEE OUVR. V. L'INT.
DOUBLE CASEM. D. INW. OPEN. WITH DOUB. WEATHER STRIP
STULPFL.TUER IN. OEFFN. MIT DOPPELANSCHLAGDICHTUNG

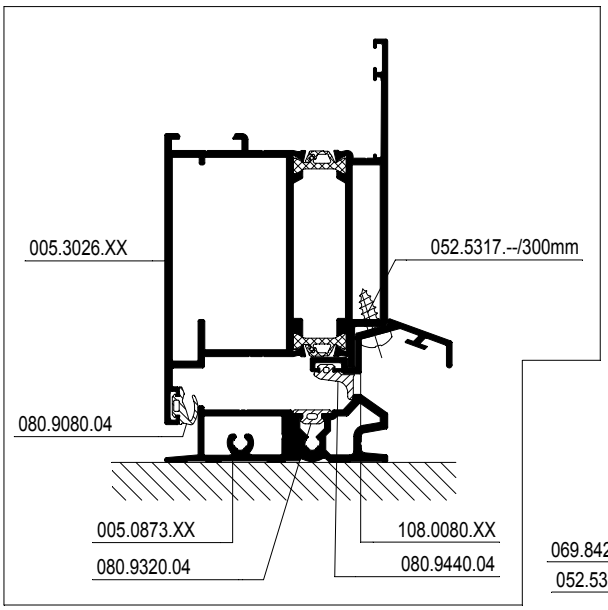

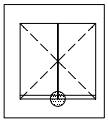

5E

6E

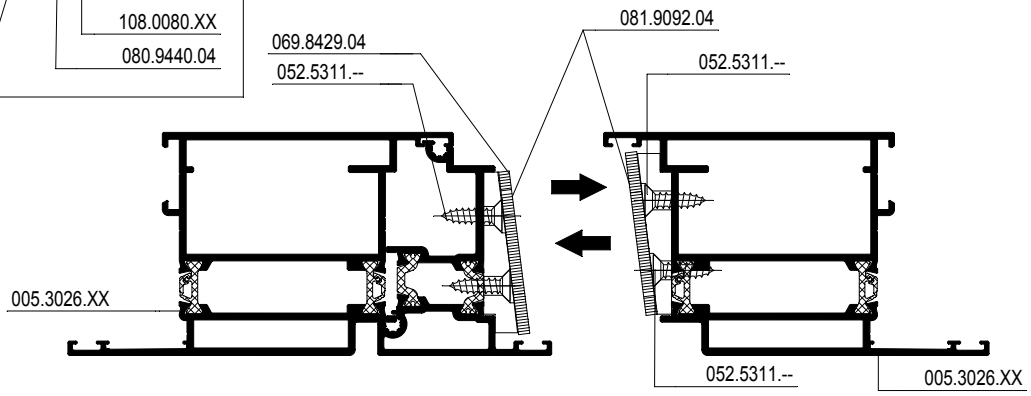

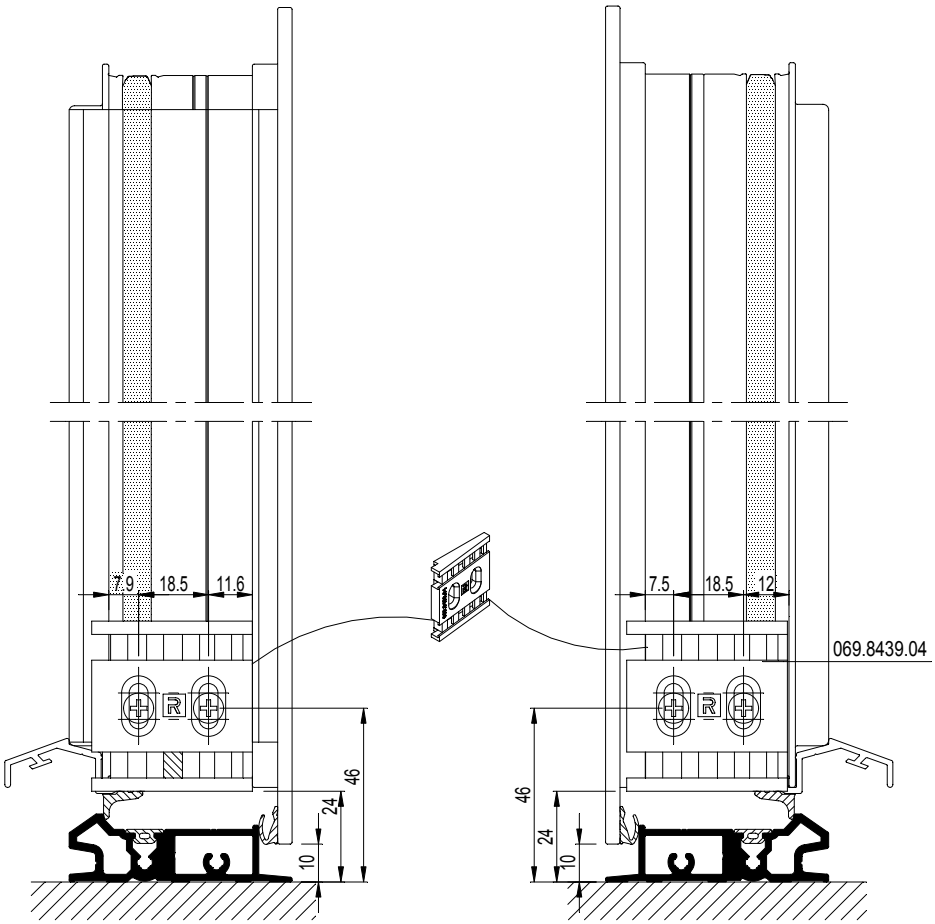

schaal - échelle
scale - Maßstab
1/2

D0081944

F

CS 68-FP
EW 30

Z-T DEUR BINNENDRAAIEND MET DUBBELE AANSLAGDICHTING
PORTE Z-T OUVR. VERS L'INT. AVEC DOUBLE JOINT DE BUTEE
Z-T DOOR INWARD OPENING WITH DOUBLE WEATHER STRIP
Z-T TUER NACH INNEN OEFFNEND MIT DOPPELANSCHLAGDICHTUNG

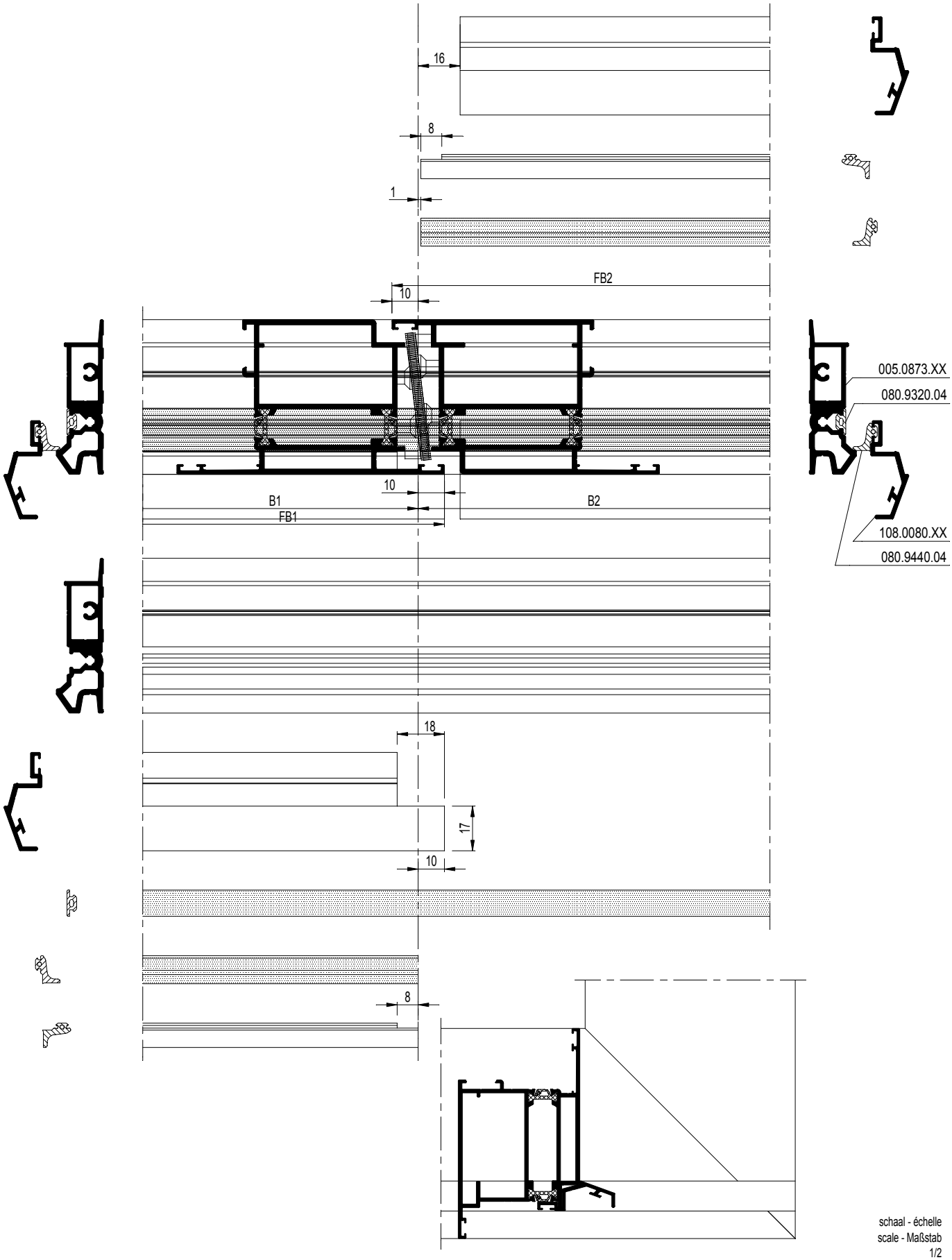

schaal - échelle
scale - Maßstab
1/2

D0081945

F

CS 68-FP
EW 30

Z-T DEUR BINNENDRAAIEND MET DUBBELE AANSLAGDICHTING
PORTE Z-T OUVR. VERS L'INT. AVEC DOUBLE JOINT DE BUTEE
Z-T DOOR INWARD OPENING WITH DOUBLE WEATHER STRIP
Z-T TUER NACH INNEN OEFFNEND MIT DOPPELANSCHLAGDICHTUNG

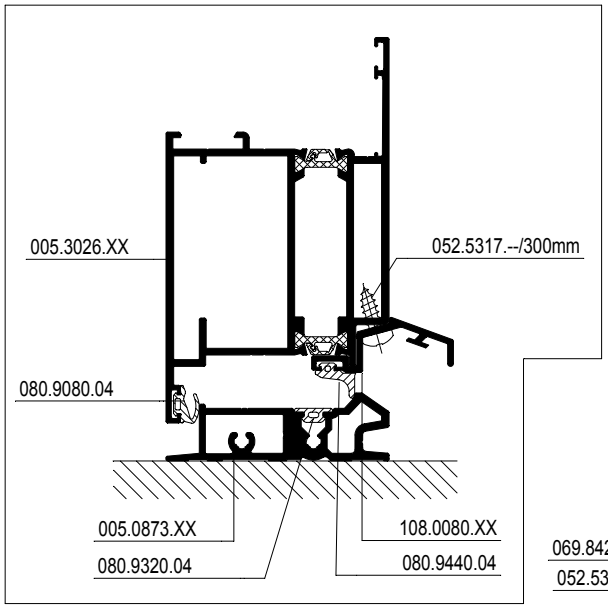

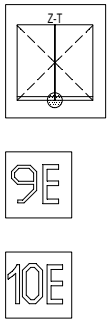

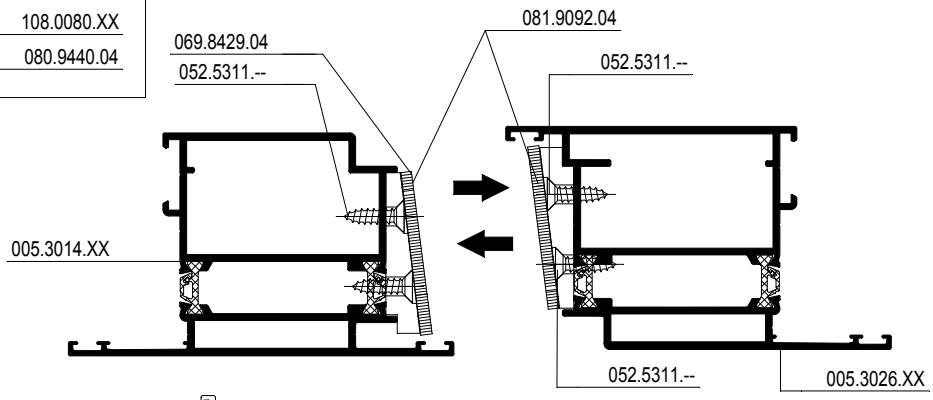

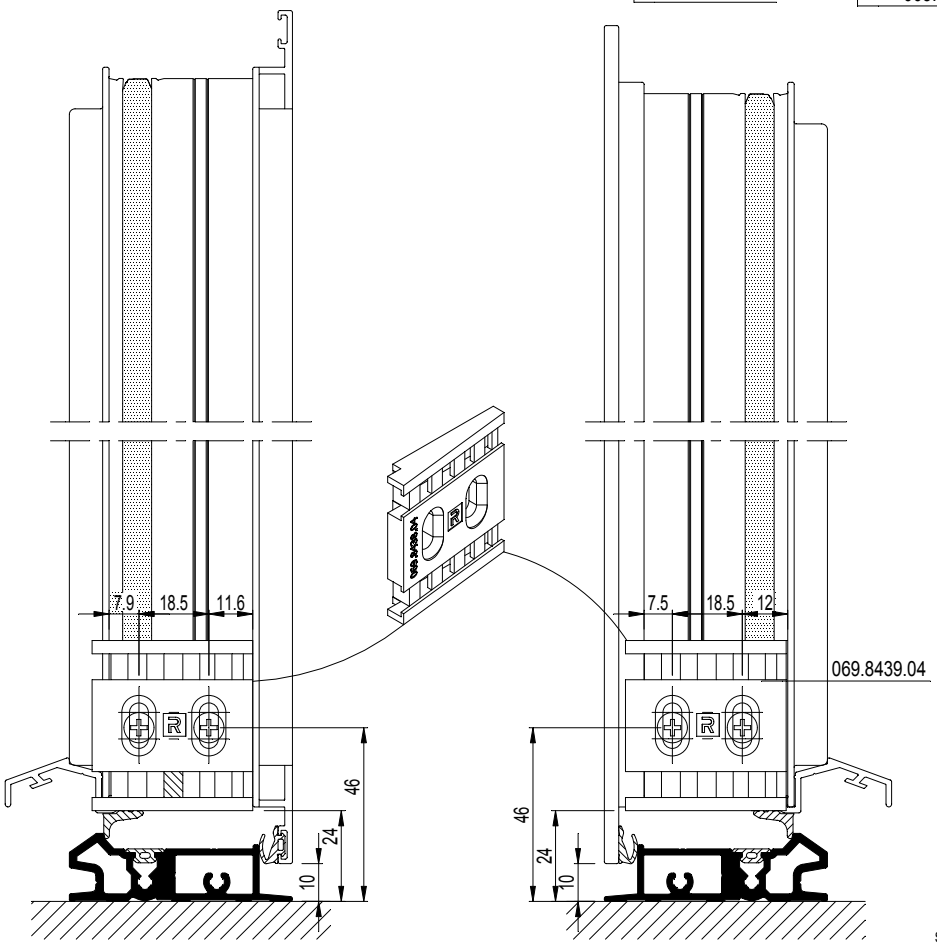

schaal - échelle
scale - Maßstab
1/2

D0081945

F

DEUR BUITENDR. MET DUBBELE AANSLAGDICHTING
PORTE DOUBLE JOINT DE BUTEE OUVR. VERS L'EXT.
DOOR OUTWARD OPENING WITH DOUBLE WEATHER STRIP
TUER NACH AUSSEN OEFFN. MIT DOPPELANSCHLAGDICHTUNG

D0081946

DEUR BUITENDR. MET DUBBELE AANSLAGDICHTING
PORTE DOUBLE JOINT DE BUTEE OUVR. VERS L'EXT.
DOOR OUTWARD OPENING WITH DOUBLE WEATHER STRIP
TUER NACH AUSSEN OEFFN. MIT DOPPELANSCHLAGDICHTUNG

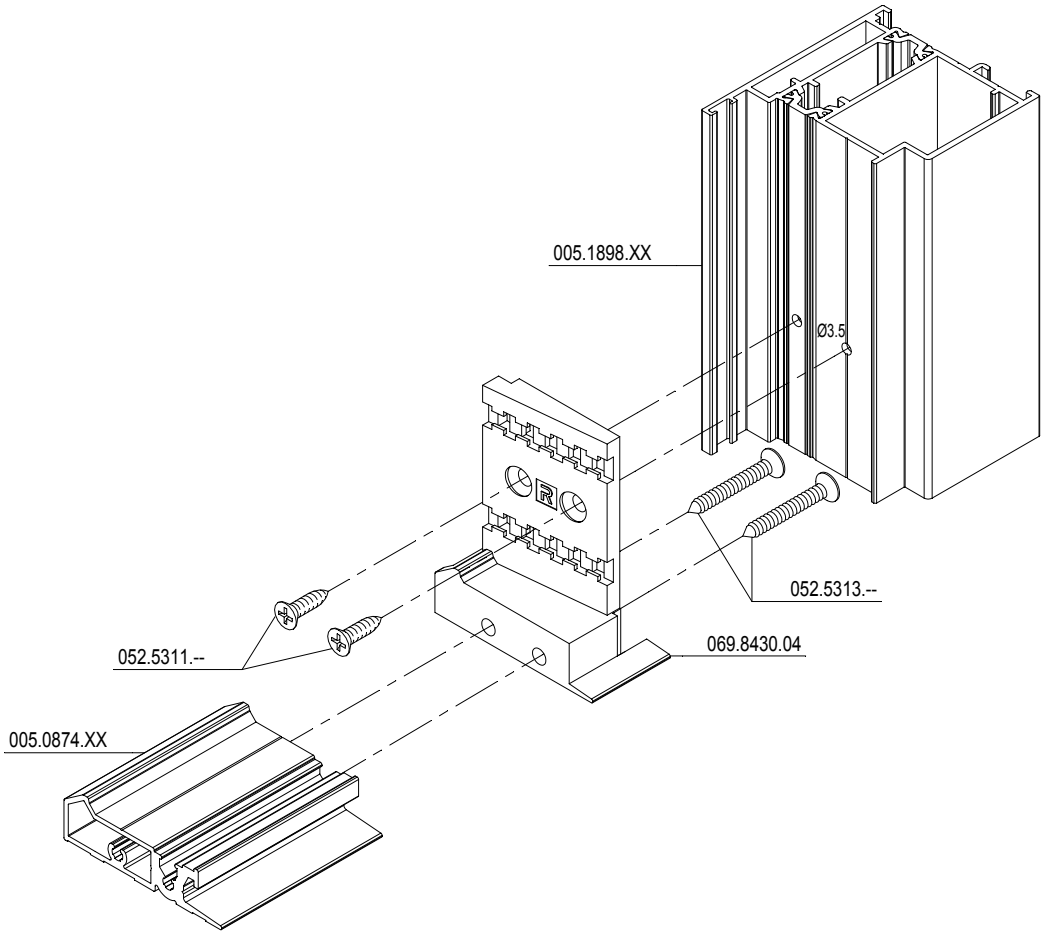

schaal - échelle
scale - Maßstab
1/2

D0081946

F

CS 68-FP
EW 30

DEUR BUITENDR. MET DUBBELE AANSLAGDICHTING
PORTE DOUBLE JOINT DE BUTEE OUVR. VERS L'EXT.
DOOR OUTWARD OPENING WITH DOUBLE WEATHER STRIP
TUER NACH AUSSEN OEFFN. MIT DOPPELANSCHLAGDICHTUNG

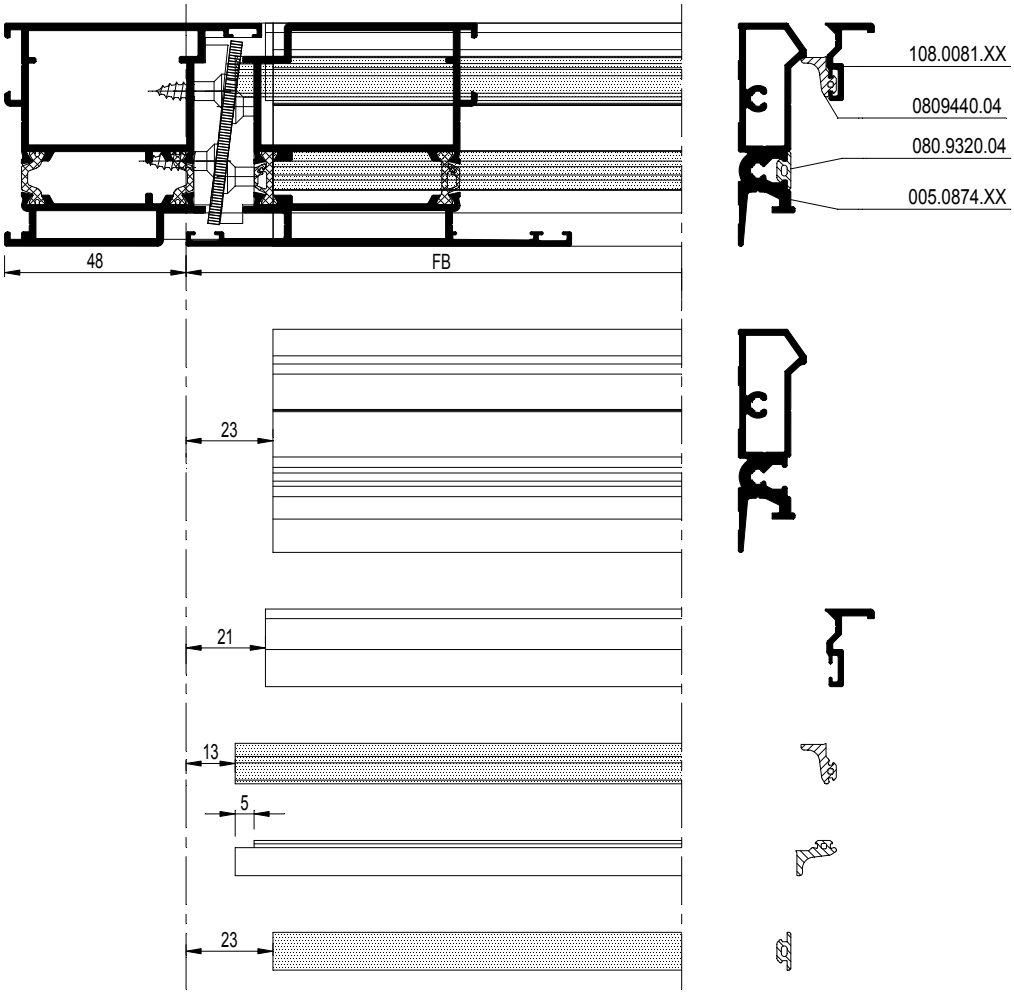

schaal - échelle
scale - Maßstab
1/2

D0081947

F

CS 68-FP
EW 30

DEUR BUITENDR. MET DUBBELE AANSLAGDICHTING
PORTE DOUBLE JOINT DE BUTEE OUVR. VERS L'EXT.
DOOR OUTWARD OPENING WITH DOUBLE WEATHER STRIP
TUER NACH AUSSEN OEFFN. MIT DOPPELANSCHLAGDICHTUNG

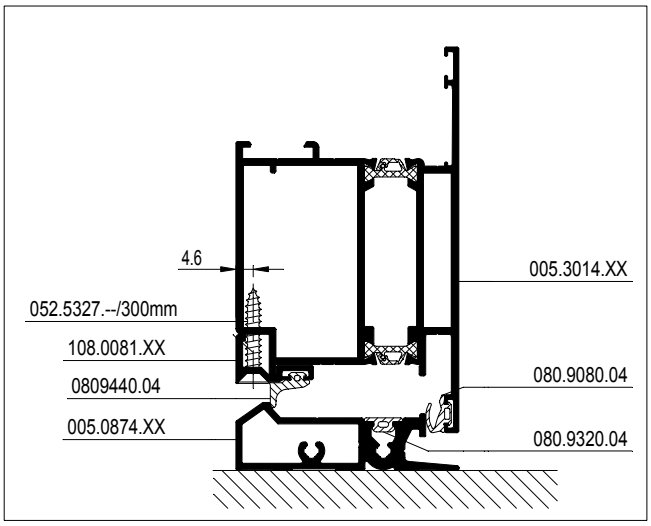

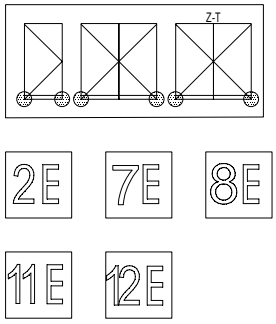

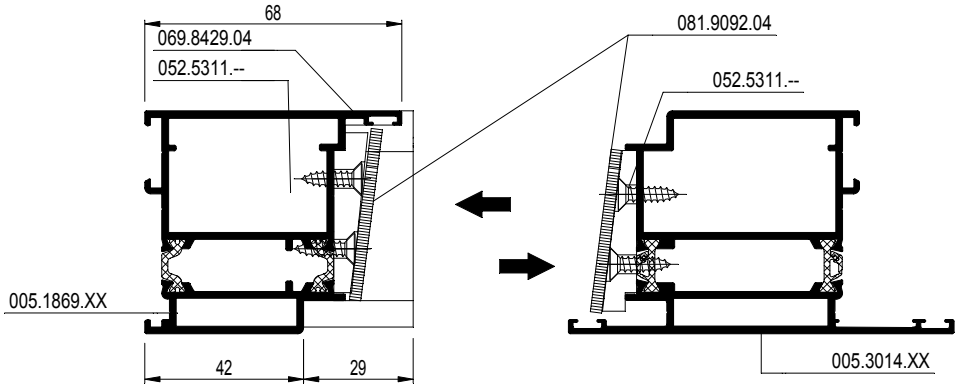

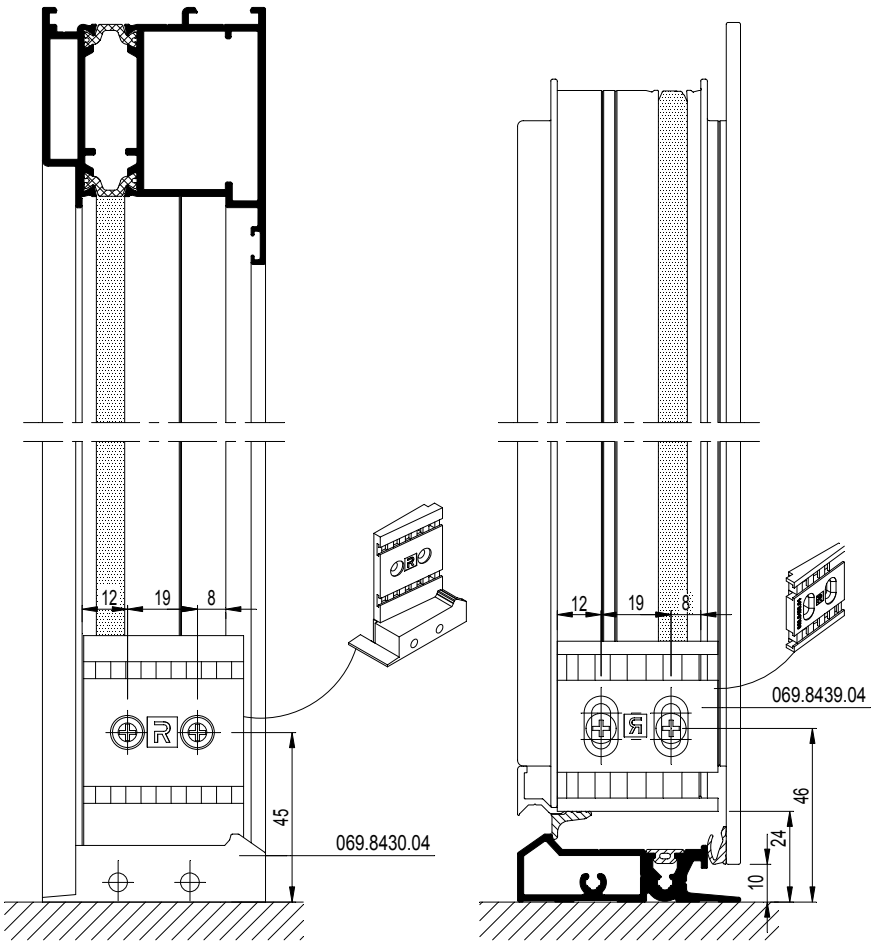

schaal - échelle
scale - Maßstab
1/2

D0081947

F

CS 68-FP
EW 30

SAMENGESTELDE DEUR BUITENDRAAIEND MET DUB. AANSLAGD.
PORTE COMPOSEE AVEC D. JOINT DE BUTTEE OUVR. V. L'INT.
COMBINED DOOR OUTWARD OPENING WITH DOUB. WEATHER ST.
KOMBINIERTE TUER AUSSEN OEFFN. MIT DOPPELANSCHLAGD.

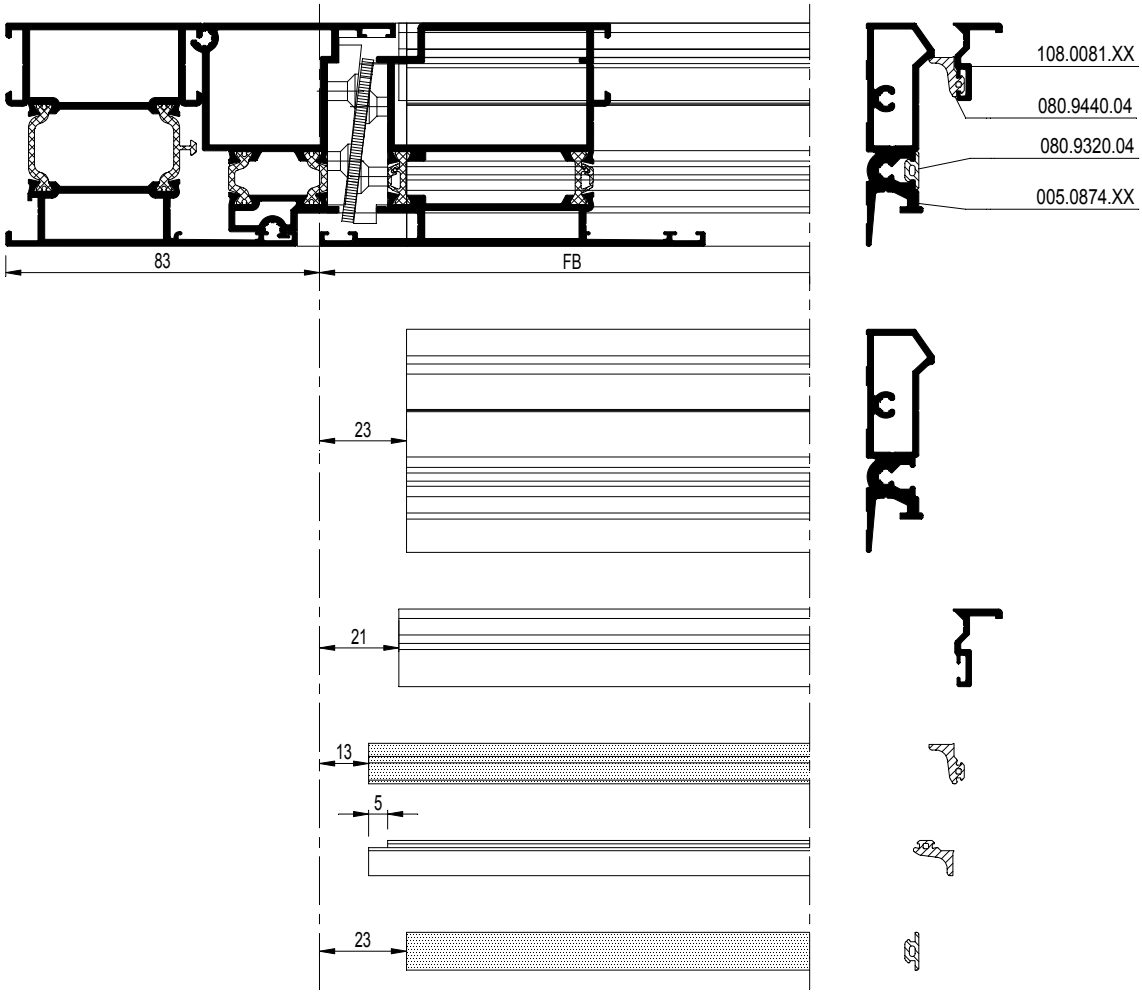

schaal - échelle
scale - Maßstab
1/2

D0081948

F

CS 68-FP
EW 30

SAMENGESTELDE DEUR BUITENDRAAIEND MET DUB. AANSLAGD.
PORTE COMPOSEE AVEC D. JOINT DE BUTTEE OUVR. V. L'INT.
COMBINED DOOR OUTWARD OPENING WITH DOUB. WEATHER ST.
KOMBINIERTE TUER AUSSEN OEFFN. MIT DOPPELANSCHLAGD.

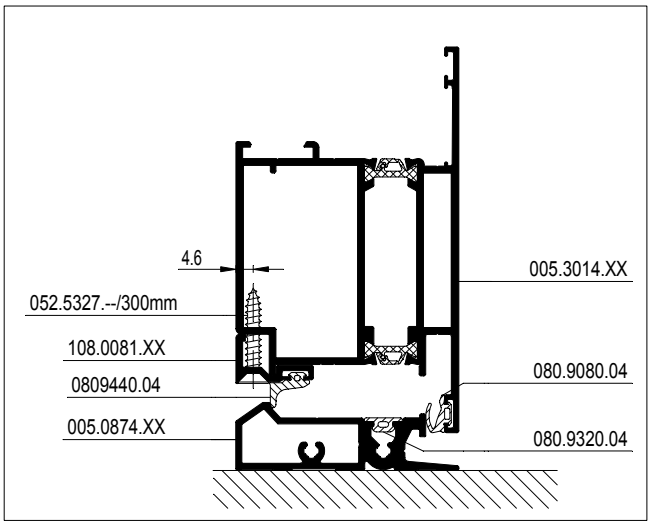

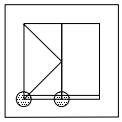

4E

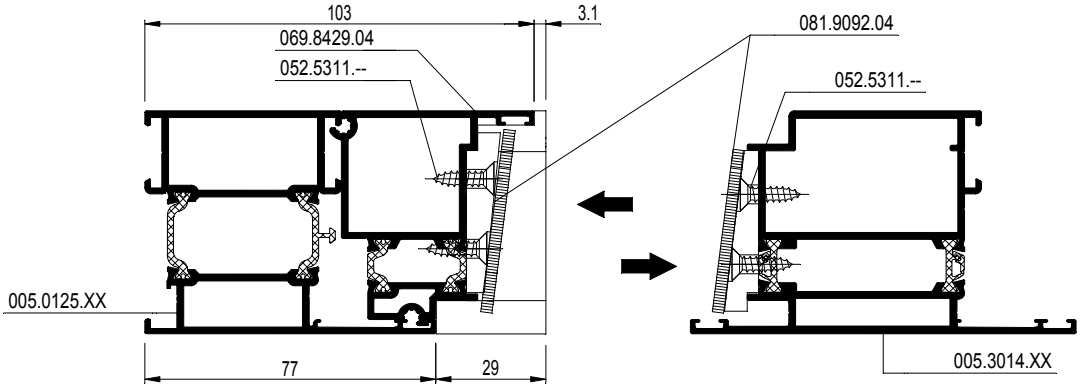

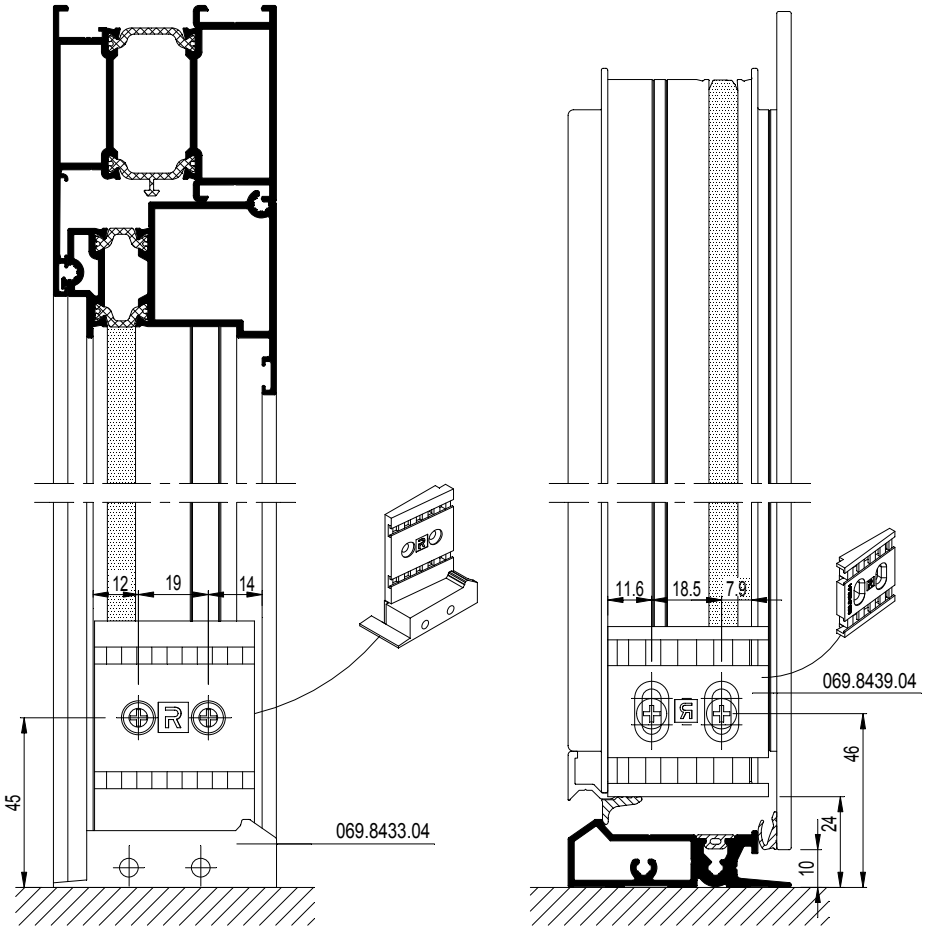

schaal - échelle
scale - Maßstab
1/2

D0081948

F

CS 68-FP
EW 30

STOLPDEUR BUITENDR. MET DUBBELE AANSLAGDICHTING
PORTE DOUB. AVEC DOUB. JOINT DE BUTEE OUVR. V. L'EXT.
DOUBLE CASEM. D. OUTW. OPEN. WITH DOUB. WEATHER STRIP
STULPFL.TUER AUSSEN OEFFN. MIT DOPPELANSCHLAGDICHT.

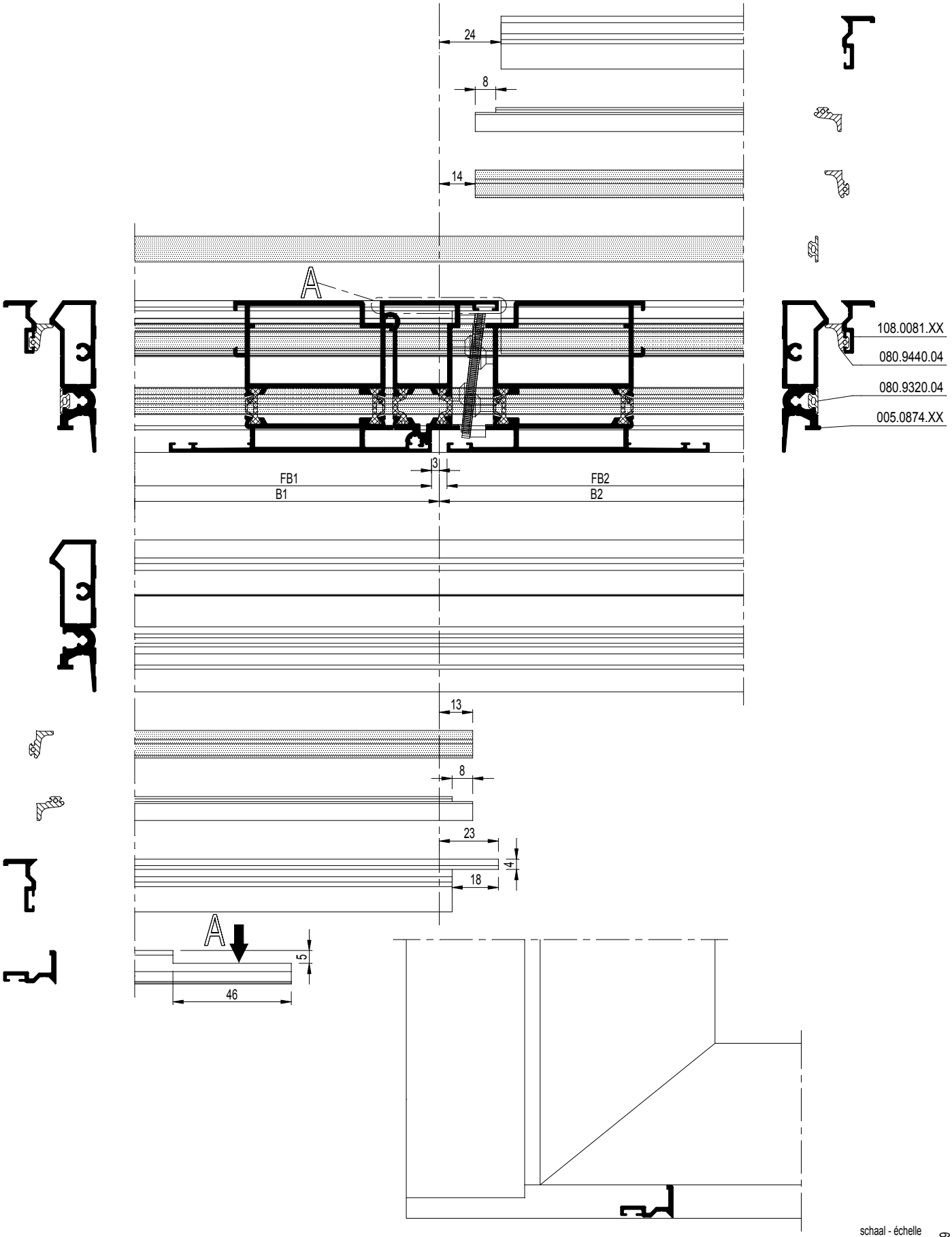

schaal - échelle
scale - Maßstab
1/2

D0081949

F

CS 68-FP
EW 30

STOLPDEUR BUITENDR. MET DUBBELE AANSLAGDICHTING
PORTE DOUB. AVEC DOUB. JOINT DE BUTEE OUVR. V. L'EXT.
DOUBLE CASEM. D. OUTW. OPEN. WITH DOUB. WEATHER STRIP
STULPFL.TUER AUSSEN OEFFN. MIT DOPPELANSCHLAGDICHT.

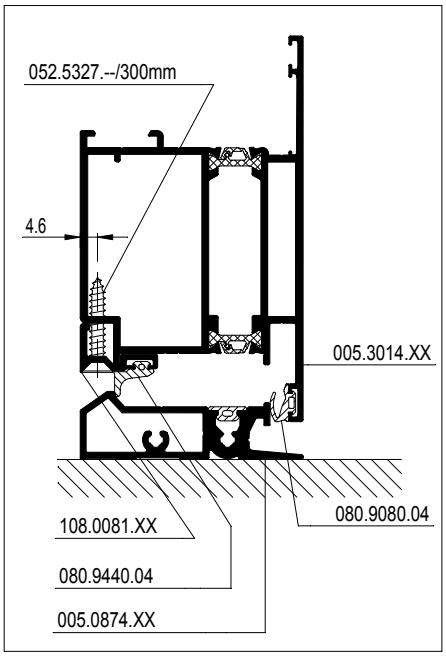

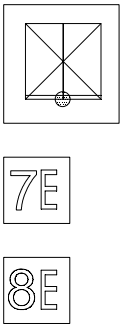

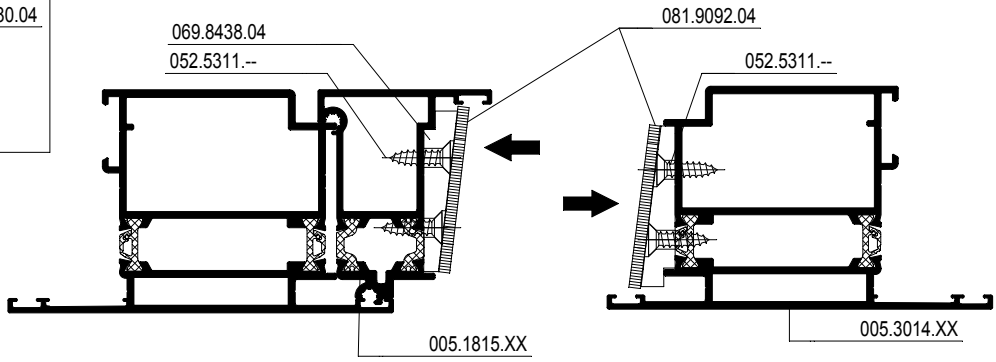

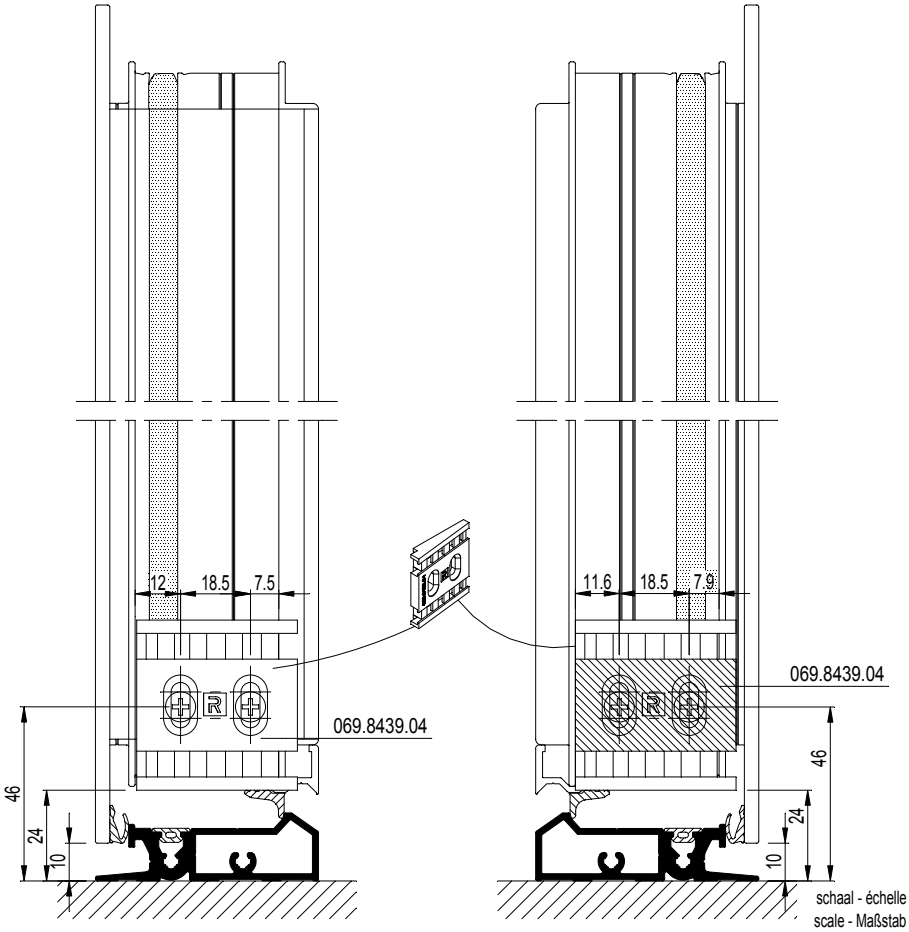

schaal - échelle
scale - Maßstab
1/2

D0081949

F

CS 68-FP
EW 30

Z-T DEUR BUITENDR. MET DUBBELE AANSLAGDICHTING
PORTE Z-T DOUBLE JOINT DE BUTEE OUVR. VERS L'EXT.
Z-T DOOR OUTWARD OPENING WITH DOUBLE WEATHER STRIP
Z-T TUER AUSSEN OEFFN. MIT DOPPELANSCHLAGDICHTUNG

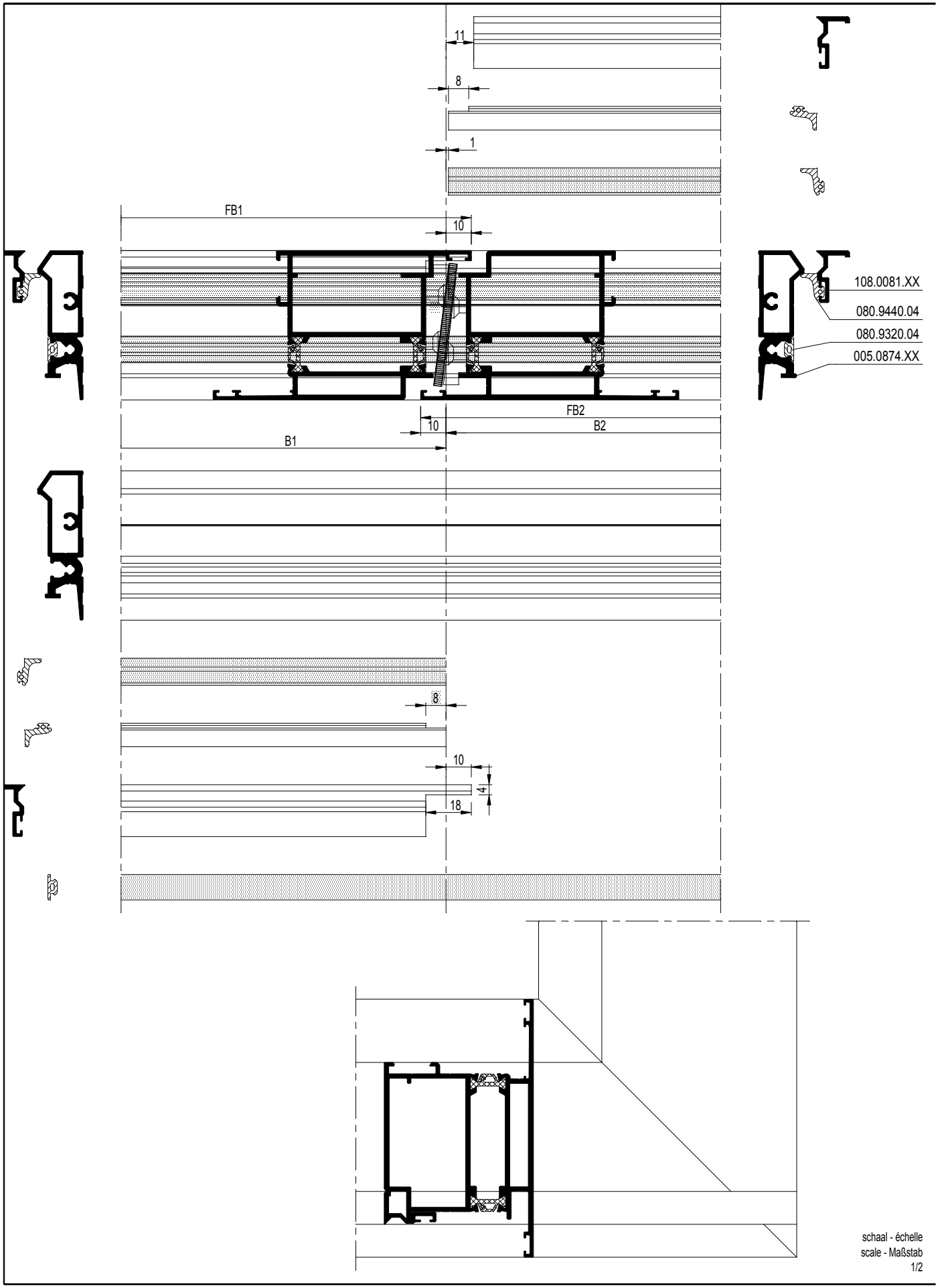

F

CS 68-FP
EW 30

Z-T DEUR BUITENDR. MET DUBBELE AANSLAGDICHTING
PORTE Z-T DOUBLE JOINT DE BUTEE OUVR. VERS L'EXT.
Z-T DOOR OUTWARD OPENING WITH DOUBLE WEATHER STRIP
Z-T TUER AUSSEN OEFFN. MIT DOPPELANSCHLAGDICHTUNG

Reynaers Aluminium

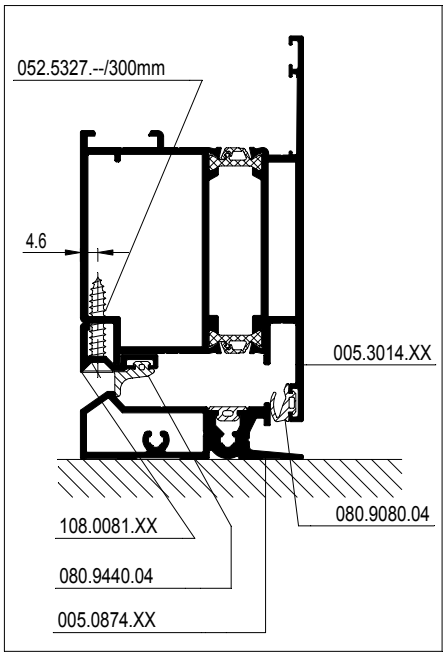

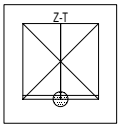

11E

12E

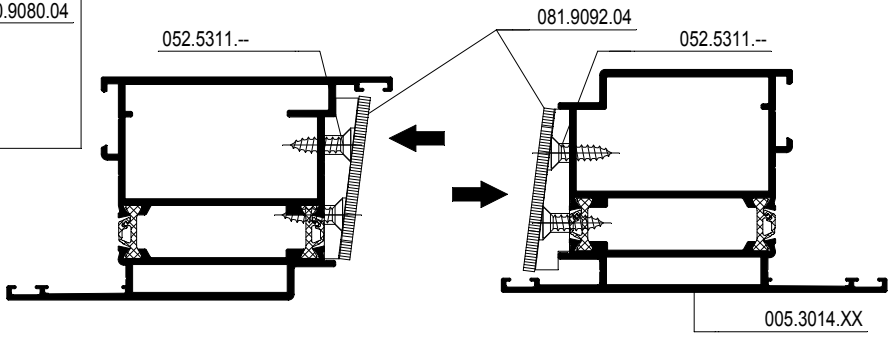

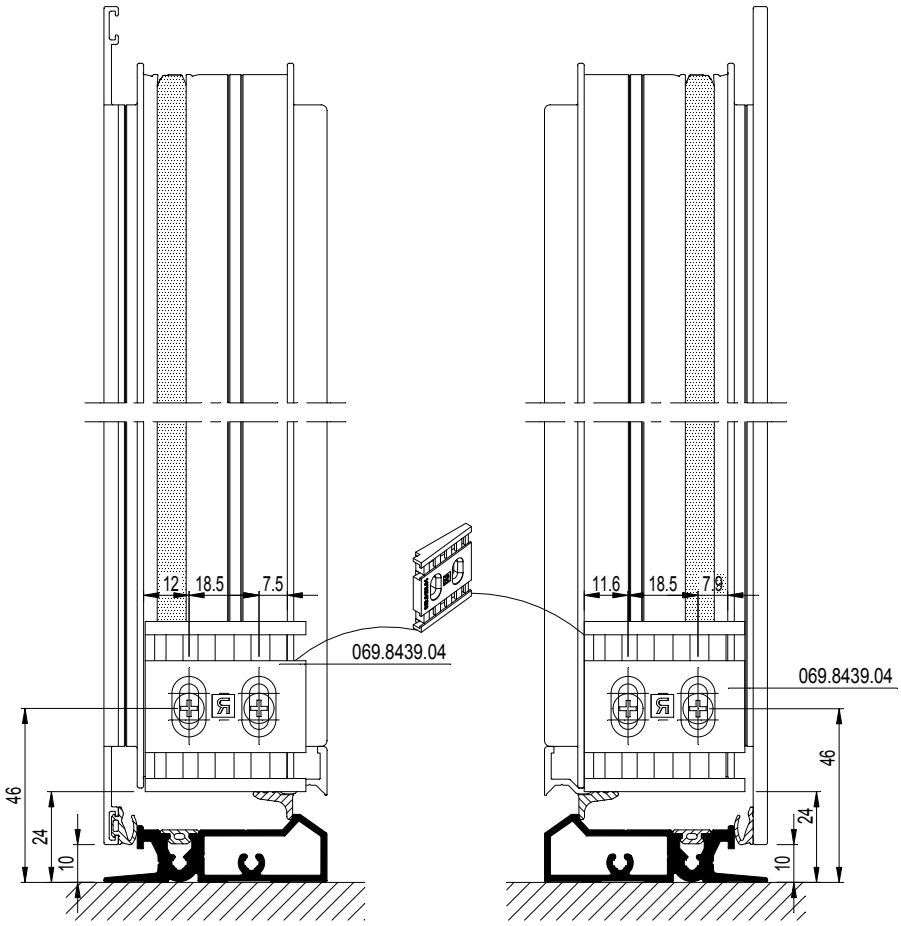

schaal - échelle
scale - Maßstab
1/2

D0081950

F

CS 68-FP
EW 30

AUTOMATISCHE DEURDICHTING
PLINTHE AUTOMATIQUE
AUTOMATIC DRAUGHT EXCLUDER
AUTOMATISCHER TUERDICHTUNG

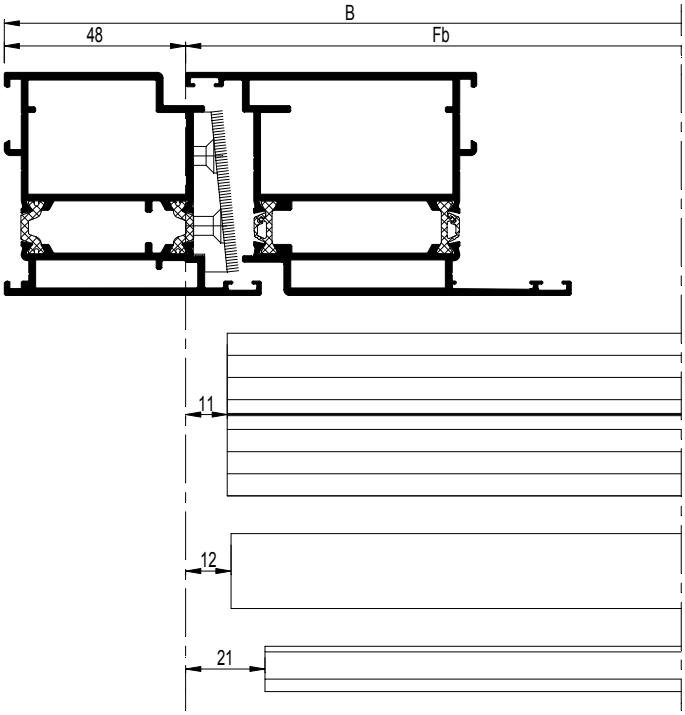

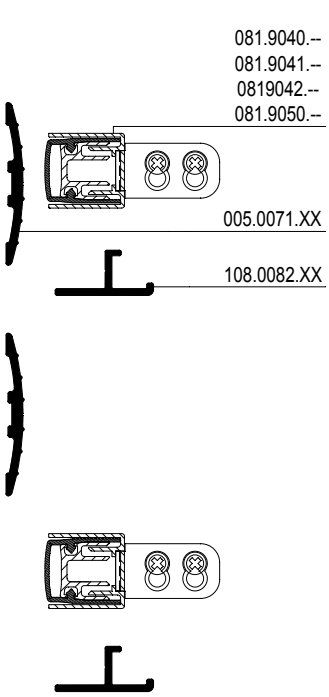

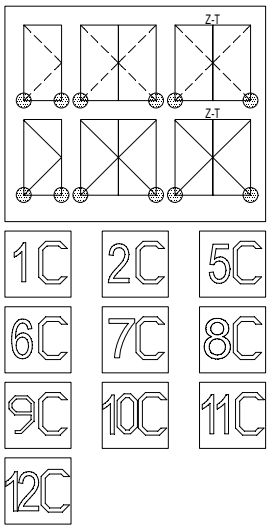

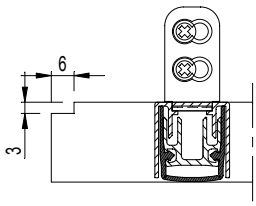

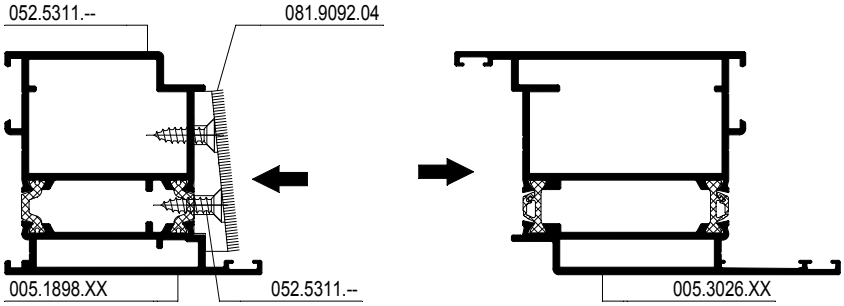

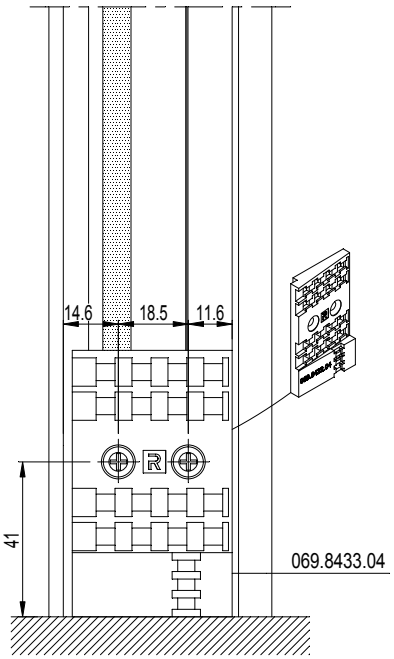

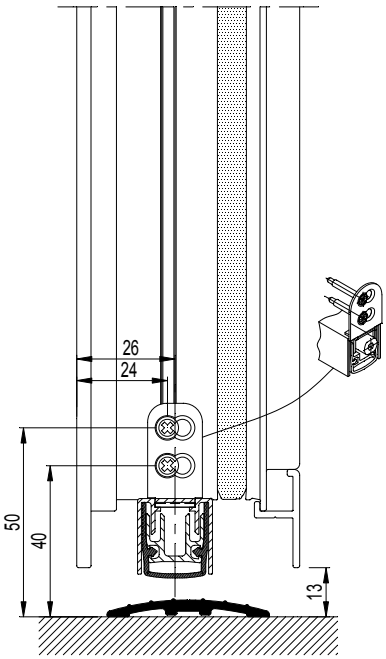

D0081953

F

CS 68-FP
EW 30

AUTOMATISCHE DEURDICHTING
PLINTHE AUTOMATIQUE
AUTOMATIC DRAUGHT EXCLUDER
AUTOMATISCHER TUERDICHTUNG

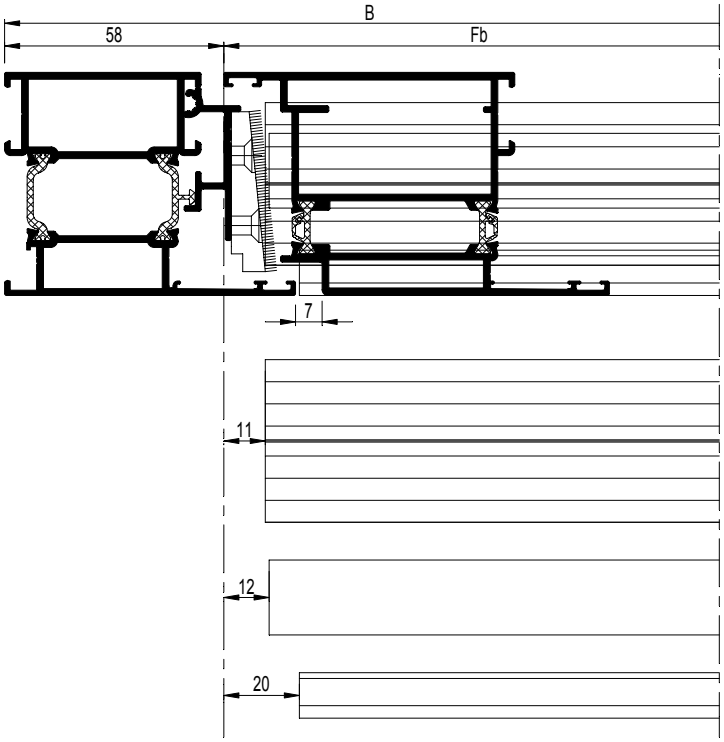

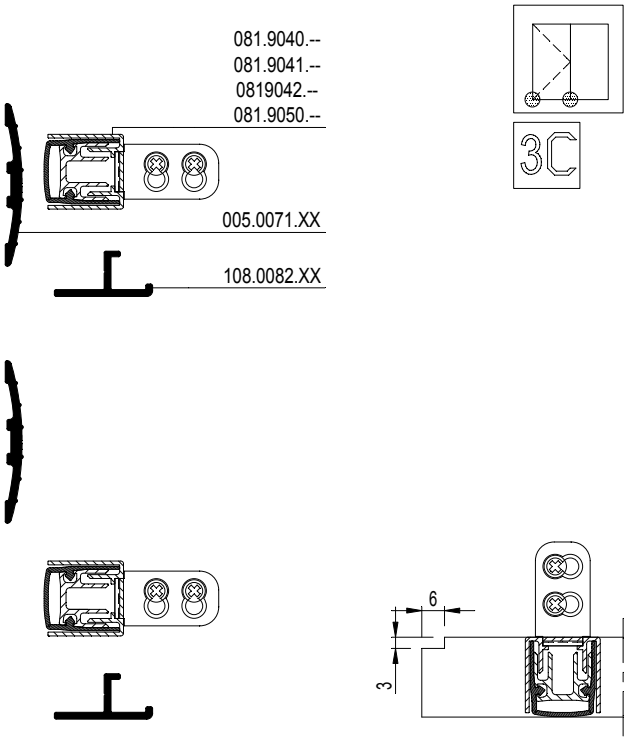

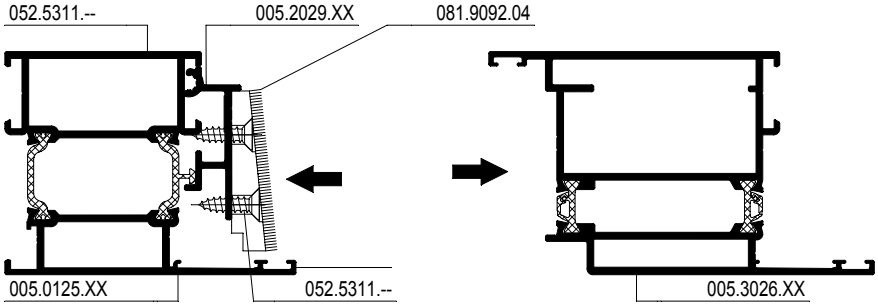

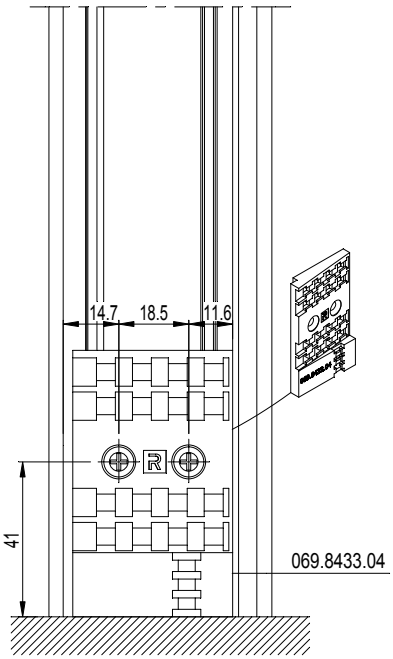

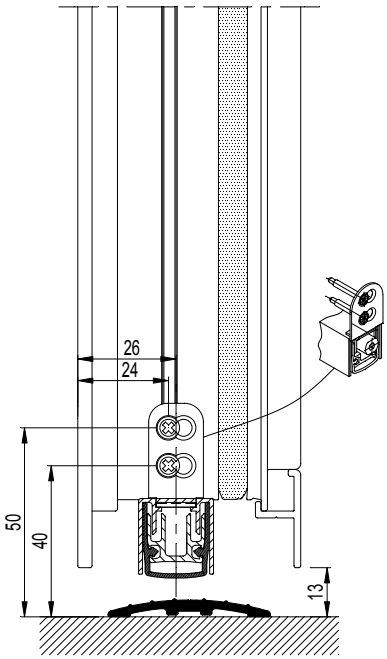

schaal - échelle
scale - Maßstab
1/2

D0081953

F

D0081955

CS 68-FP
EW 30

AUTOMATISCHE DEURDICHTING
PLINTHE AUTOMATIQUE
AUTOMATIC DRAUGHT EXCLUDER
AUTOMATISCHER TUERDICHTUNG

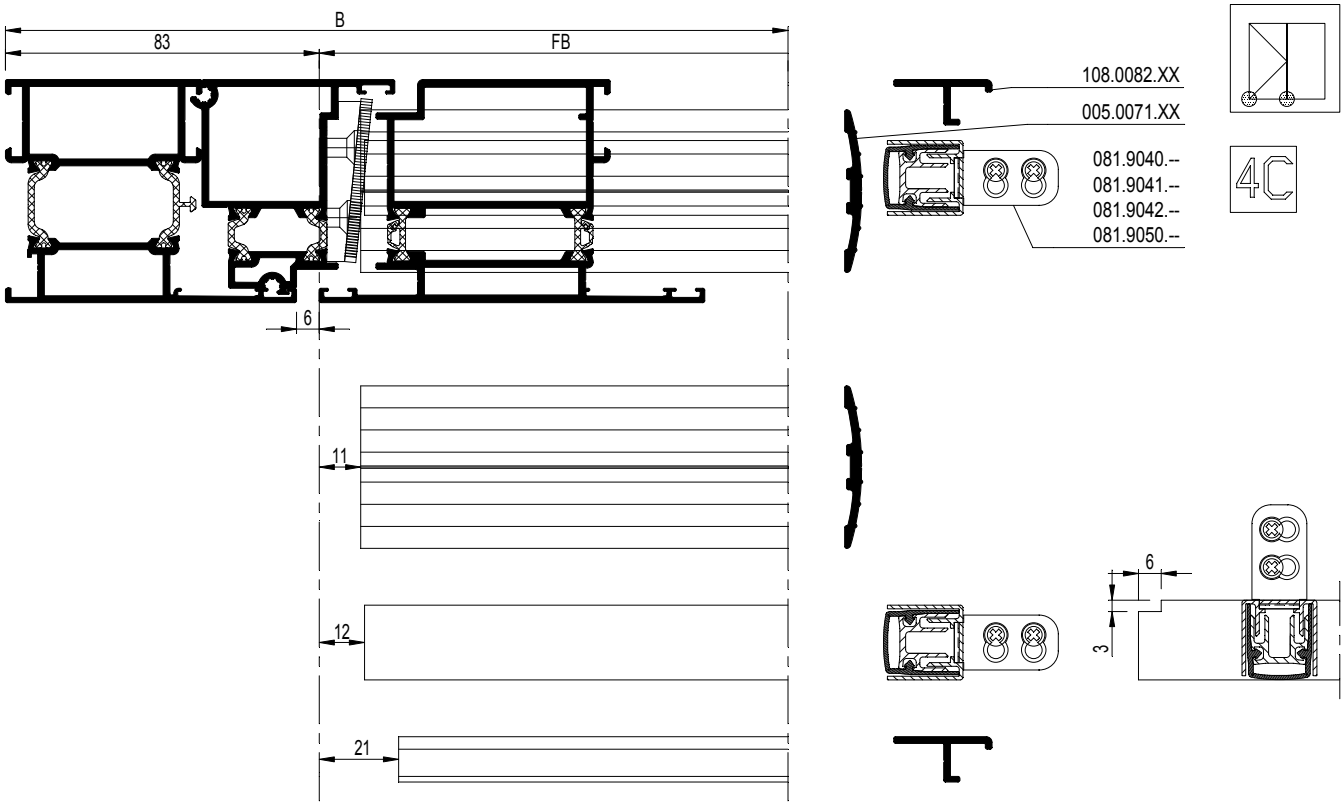

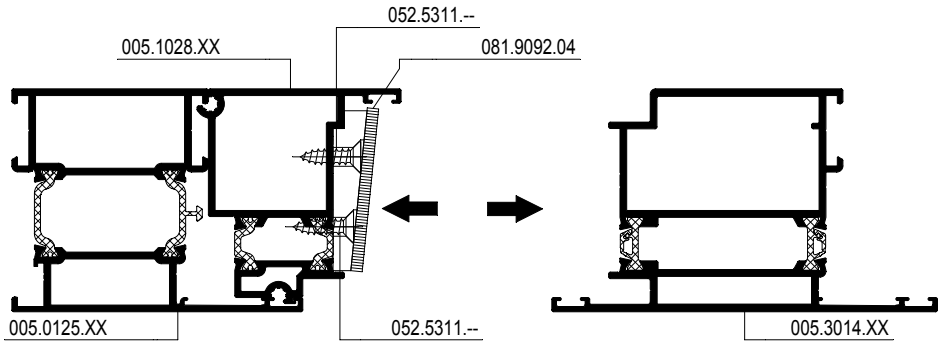

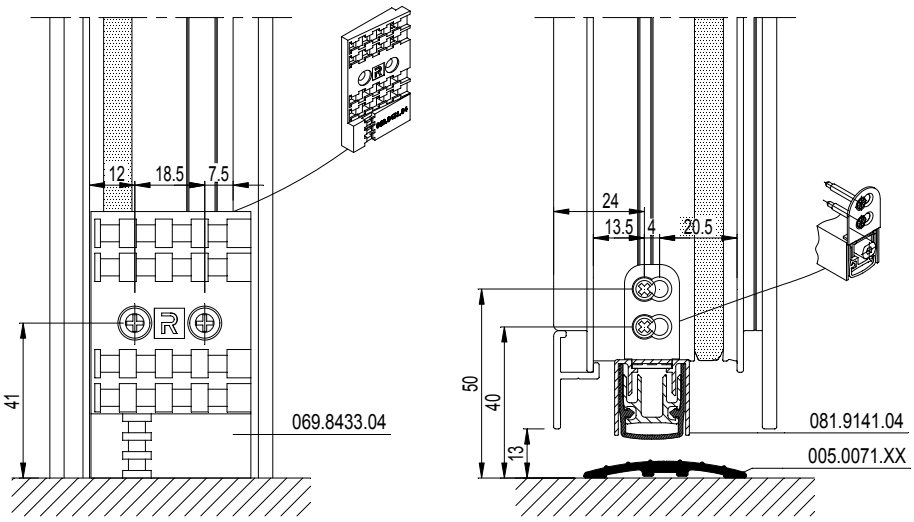

schaal - échelle
scale - Maßstab
1/2

F

D0081955

CS 68-FP
EW 30

AUTOMATISCHE DEURDICHTING
PLINTHE AUTOMATIQUE
AUTOMATIC DRAUGHT EXCLUDER
AUTOMATISCHER TUERDICHTUNG

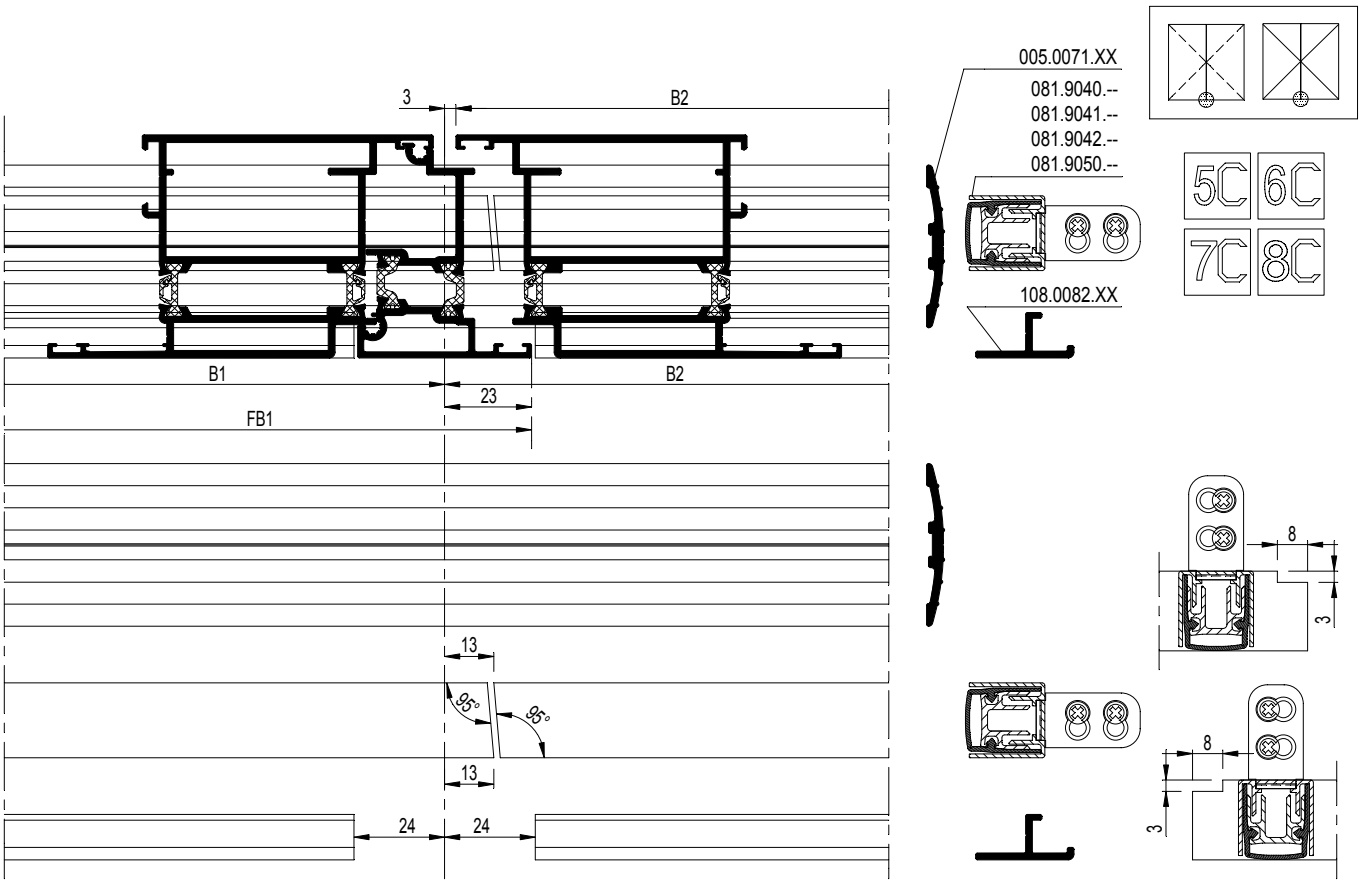

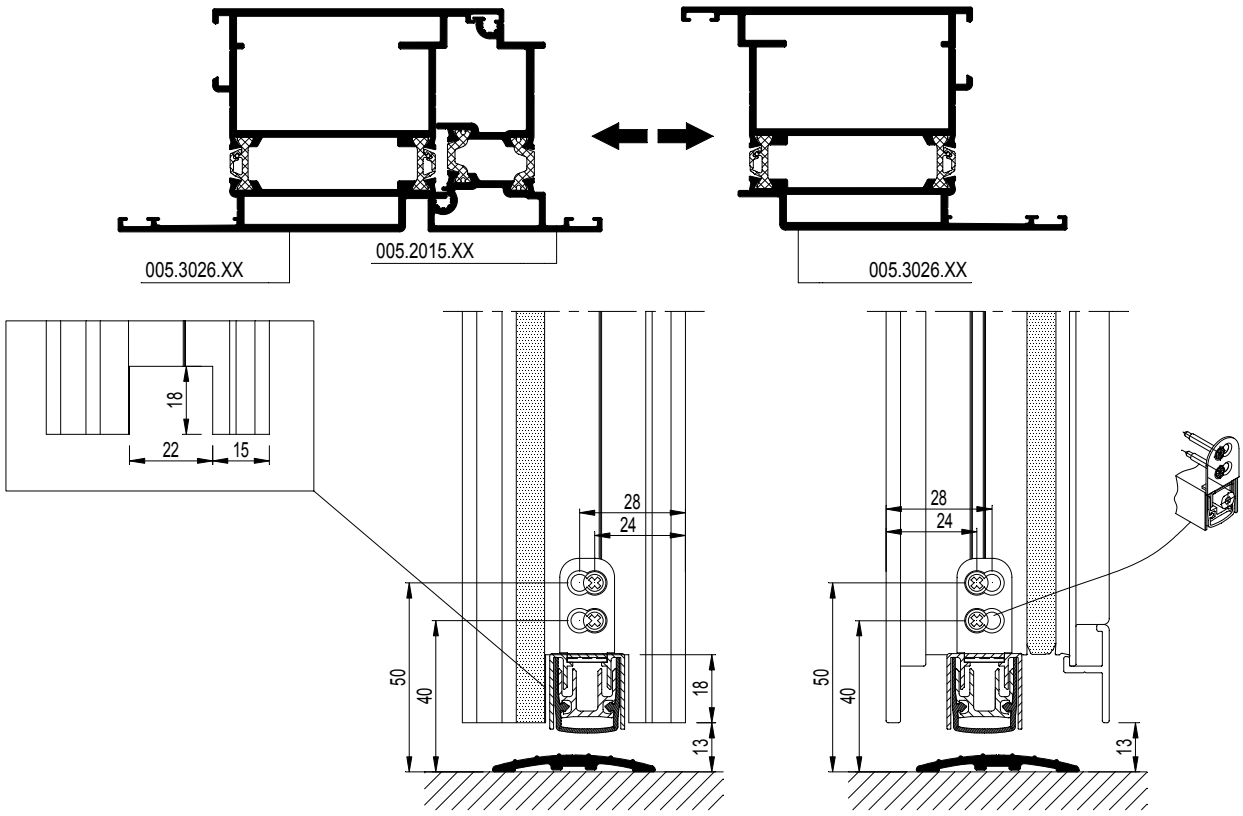

schaal - échelle
scale - Maßstab
1/2

D0081956

F

CS 68-FP
EW 30

AUTOMATISCHE DEURDICHTING
PLINTHE AUTOMATIQUE
AUTOMATIC DRAUGHT EXCLUDER
AUTOMATISCHER TUERDICHTUNG

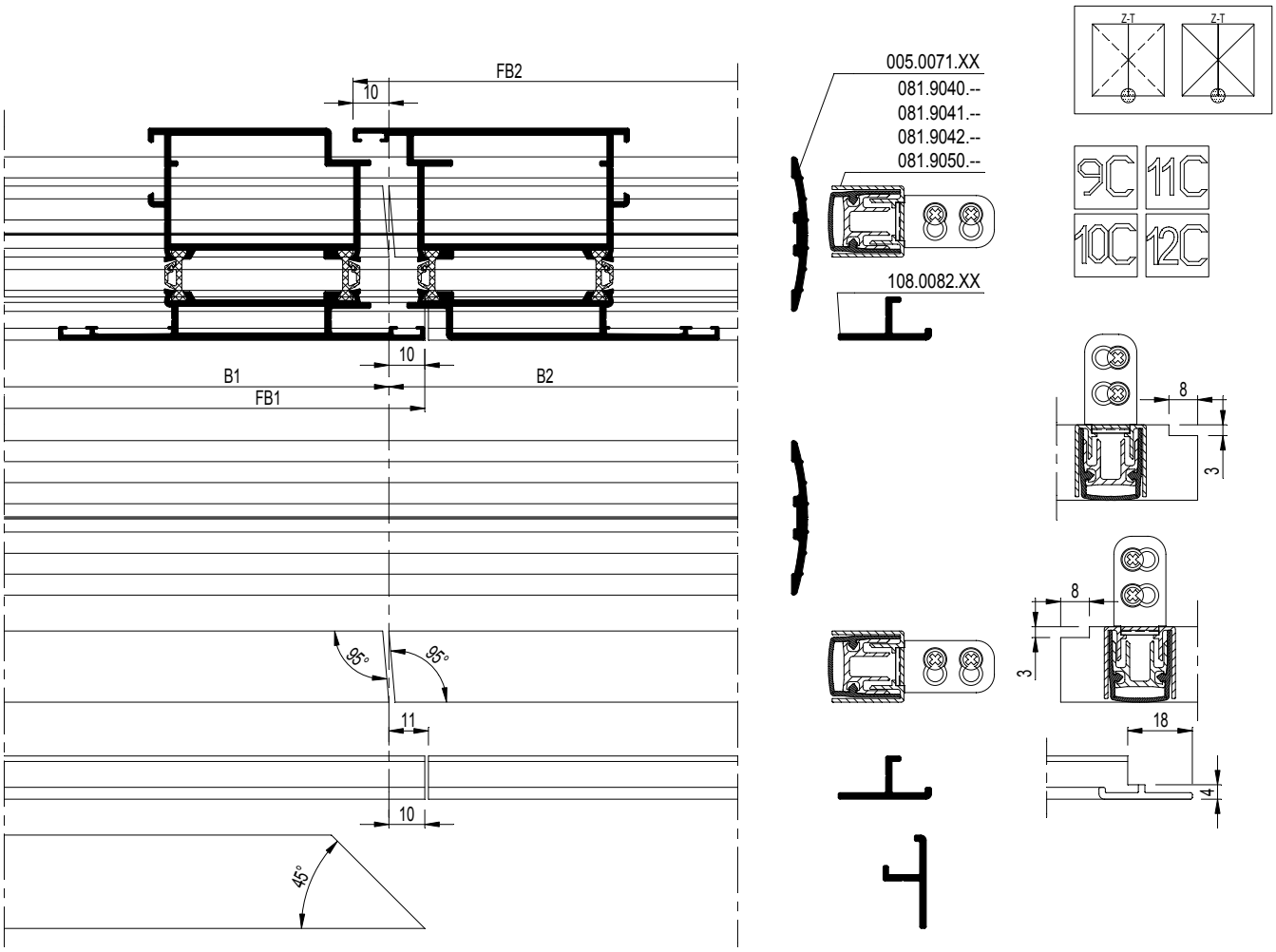

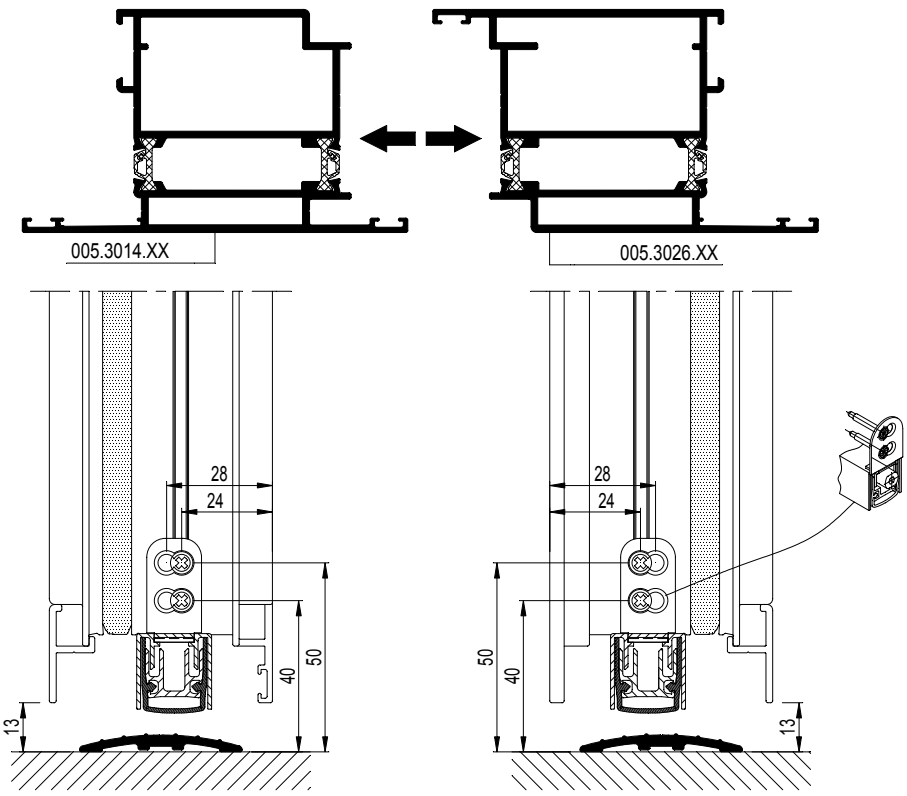

schaal - échelle
scale - Maßstab
1/2

D0081956

F

CS 68-FP
EW 30

AUTOMATISCHE DEURDICHTING
PLINTHE AUTOMATIQUE
AUTOMATIC DRAUGHT EXCLUDER
AUTOMATISCHER TUERDICHTUNG

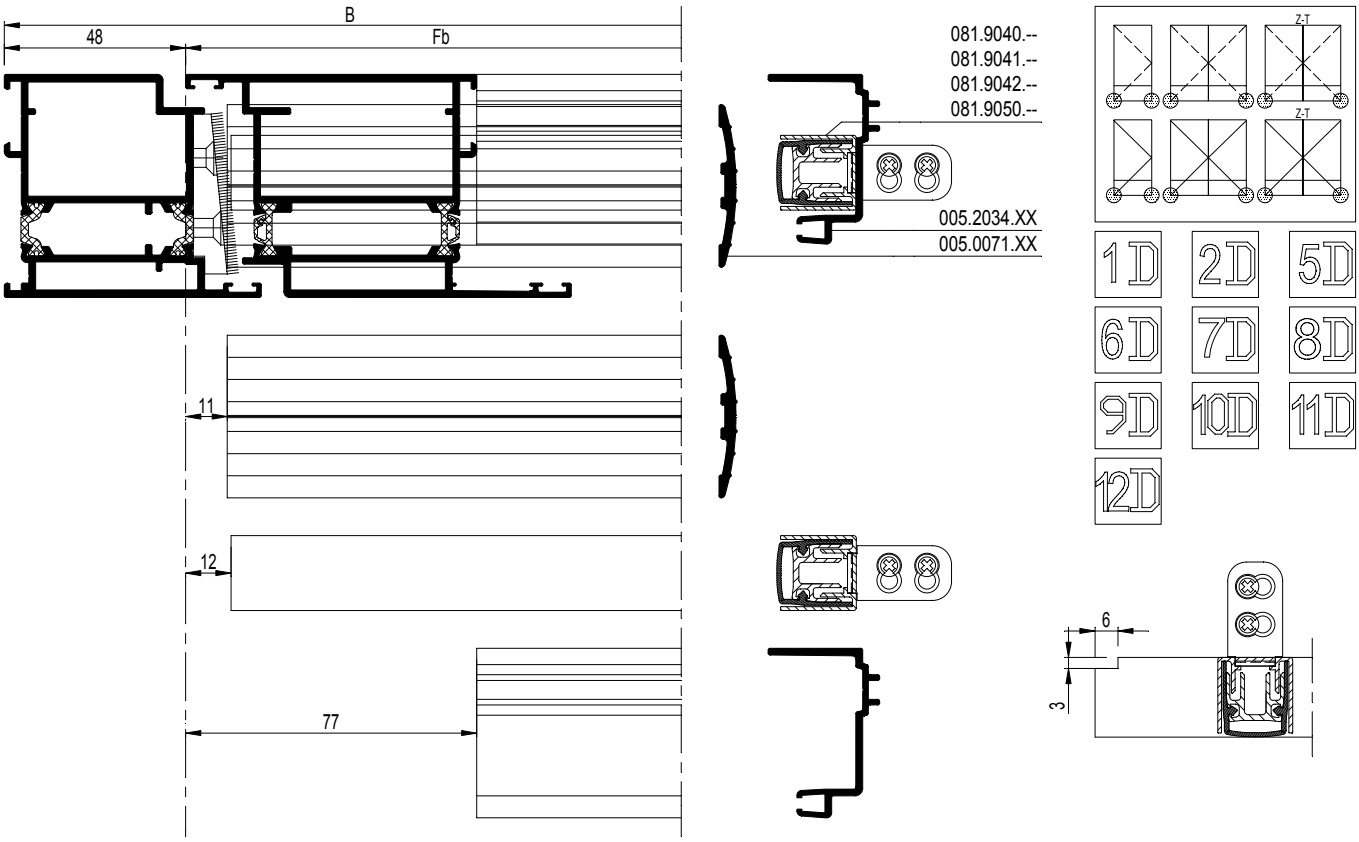

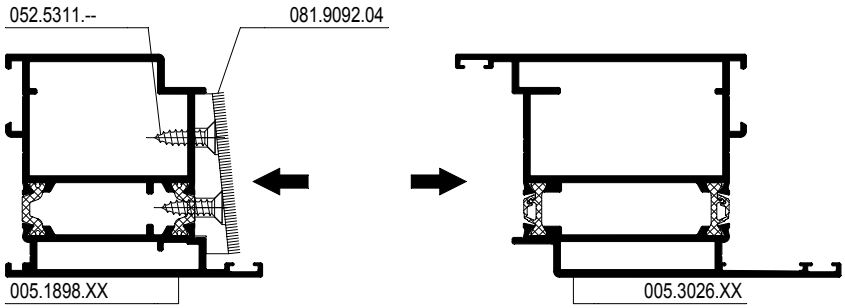

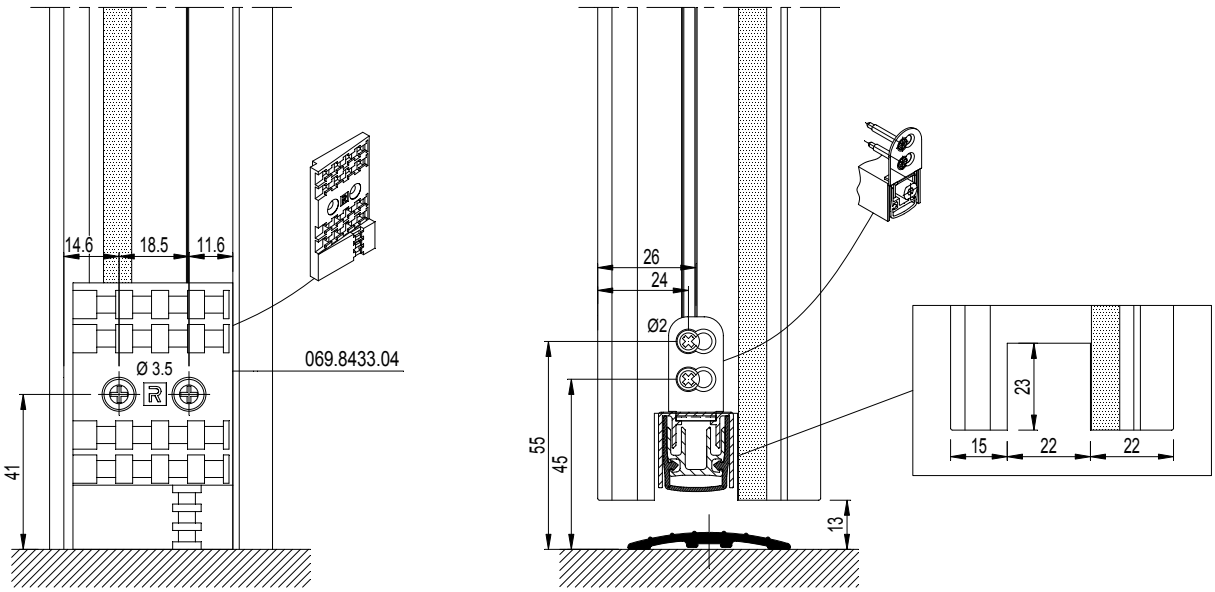

F

D0081957

CS 68-FP
EW 30

AUTOMATISCHE DEURDICHTING
PLINTHE AUTOMATIQUE
AUTOMATIC DRAUGHT EXCLUDER
AUTOMATISCHER TUERDICHTUNG

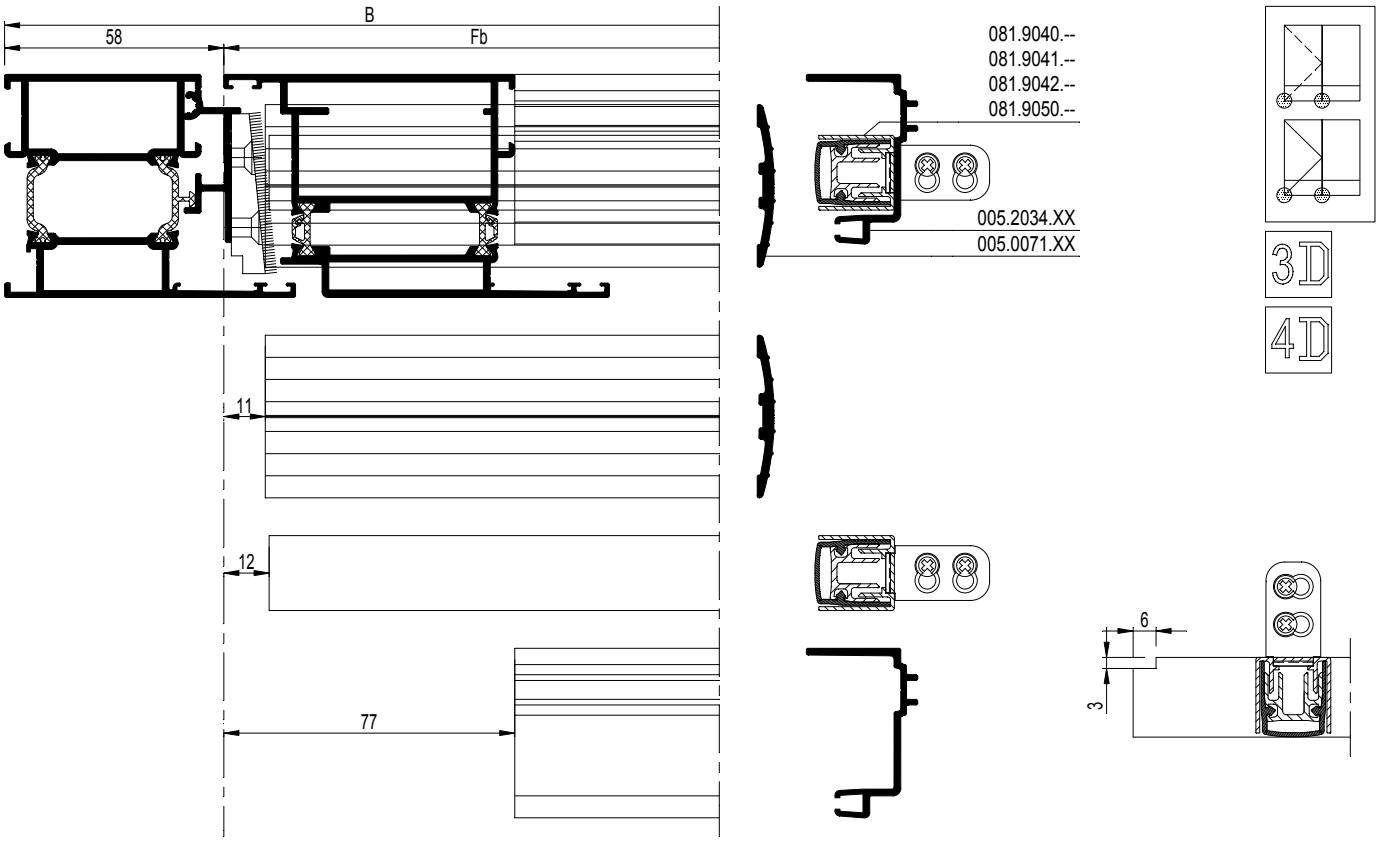

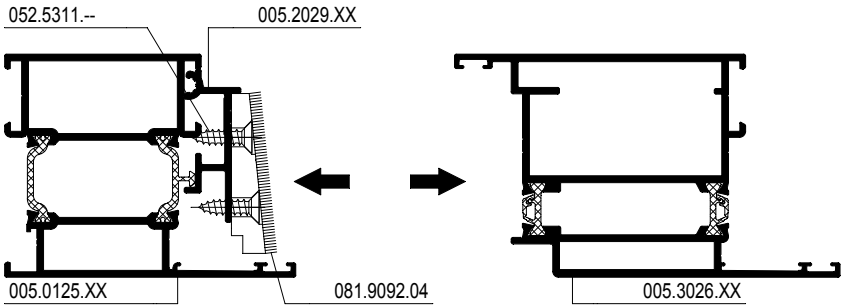

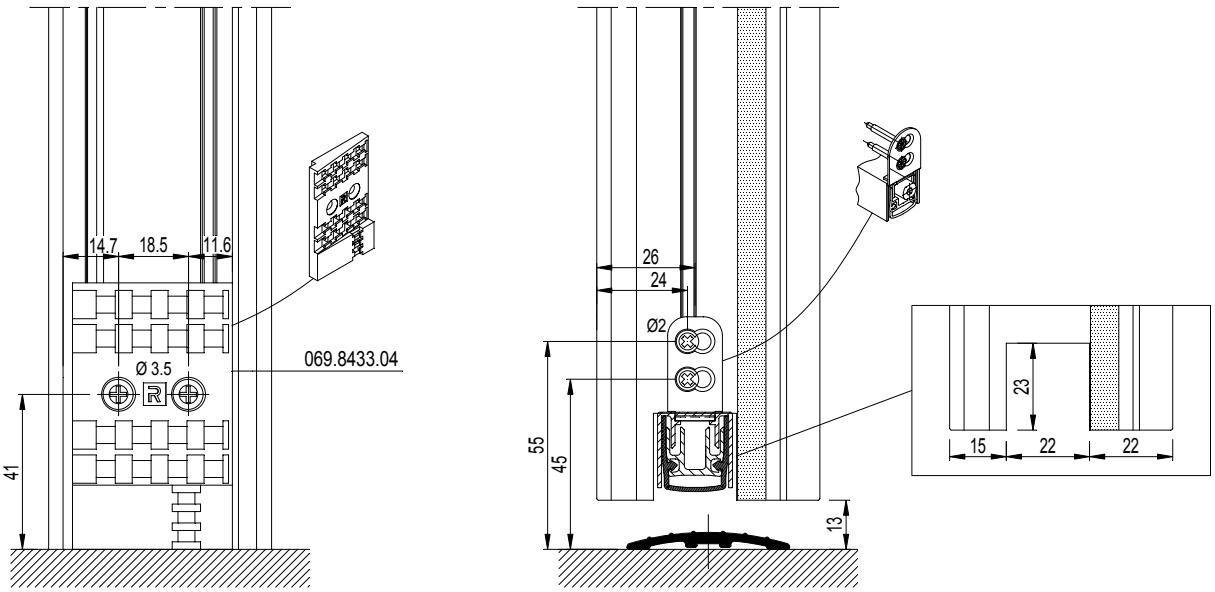

schaal - échelle
scale - Maßstab
1/2

D0081957

F

CS 68-FP
EW 30

AUTOMATISCHE DEURDICHTING
PLINTHE AUTOMATIQUE
AUTOMATIC DRAUGHT EXCLUDER
AUTOMATISCHER TUERDICHTUNG

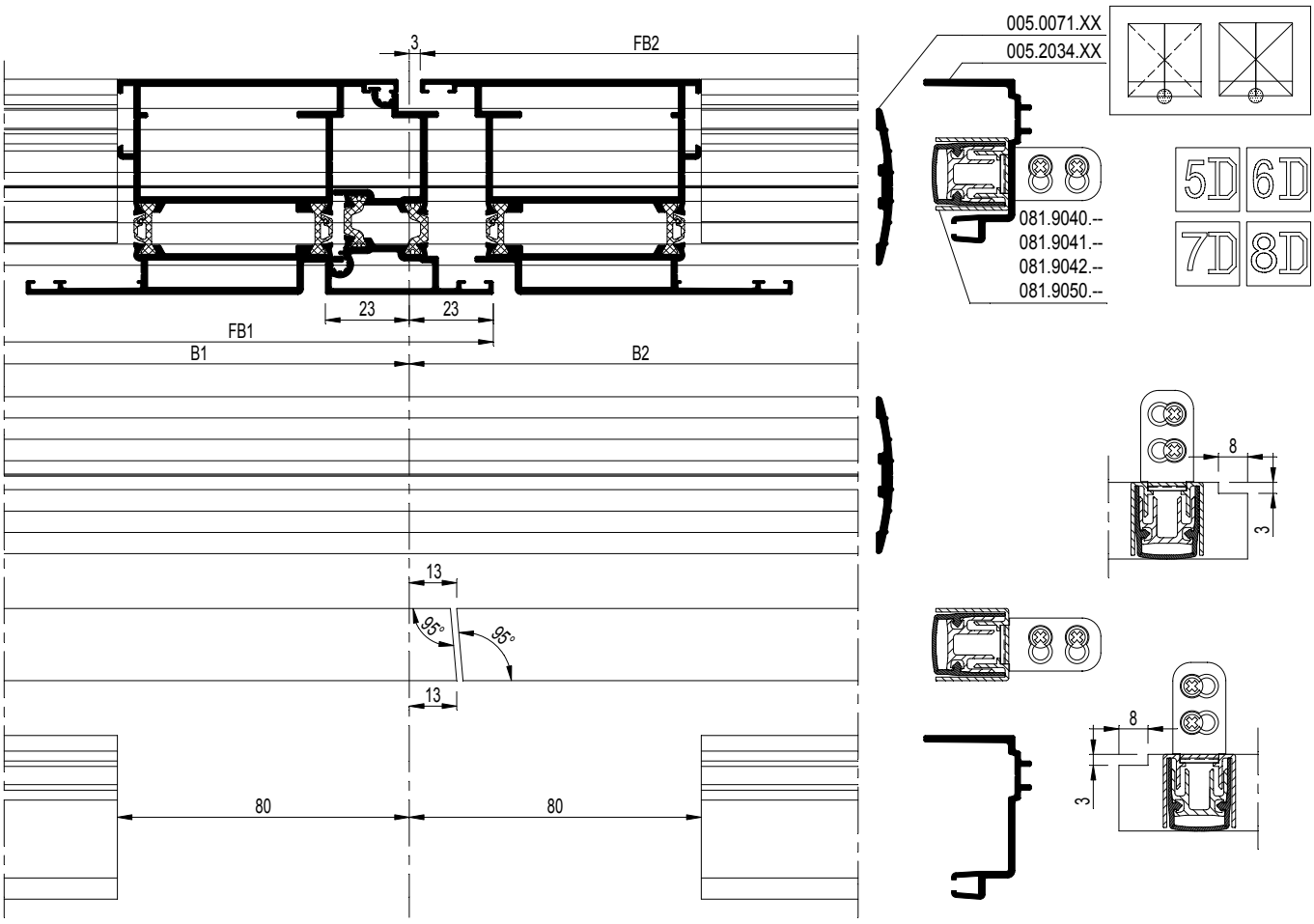

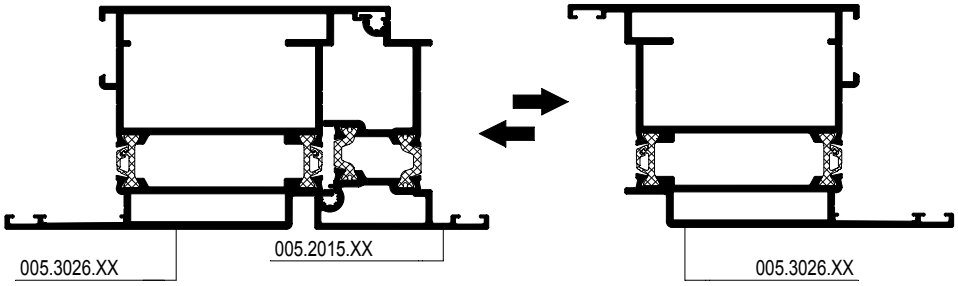

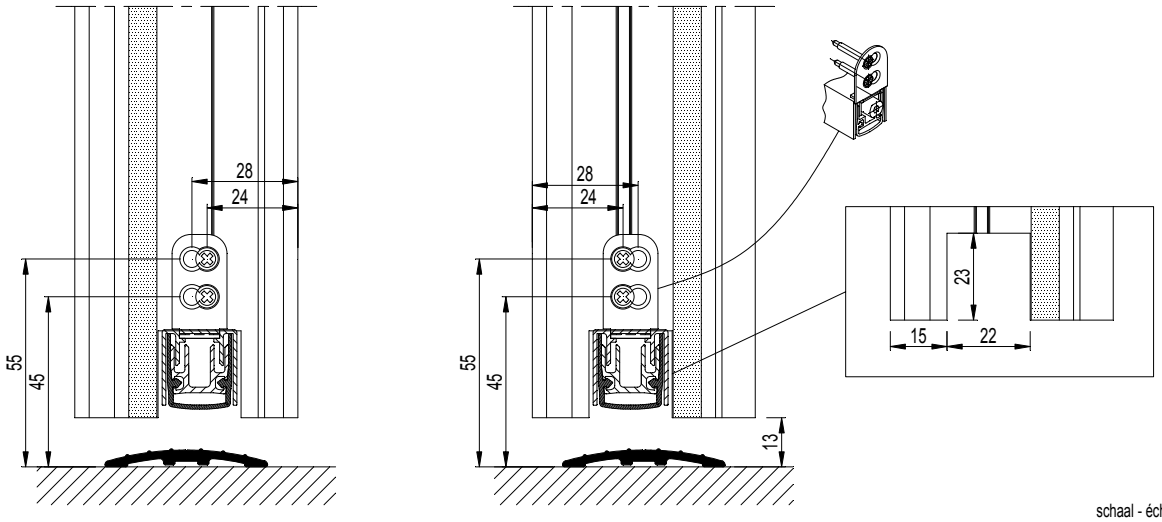

schaal - échelle
scale - Maßstab
1/2

D0081958

F

AUTOMATISCHE DEURDICHTING
PLINTHE AUTOMATIQUE
AUTOMATIC DRAUGHT EXCLUDER
AUTOMATISCHER TUERDICHTUNG

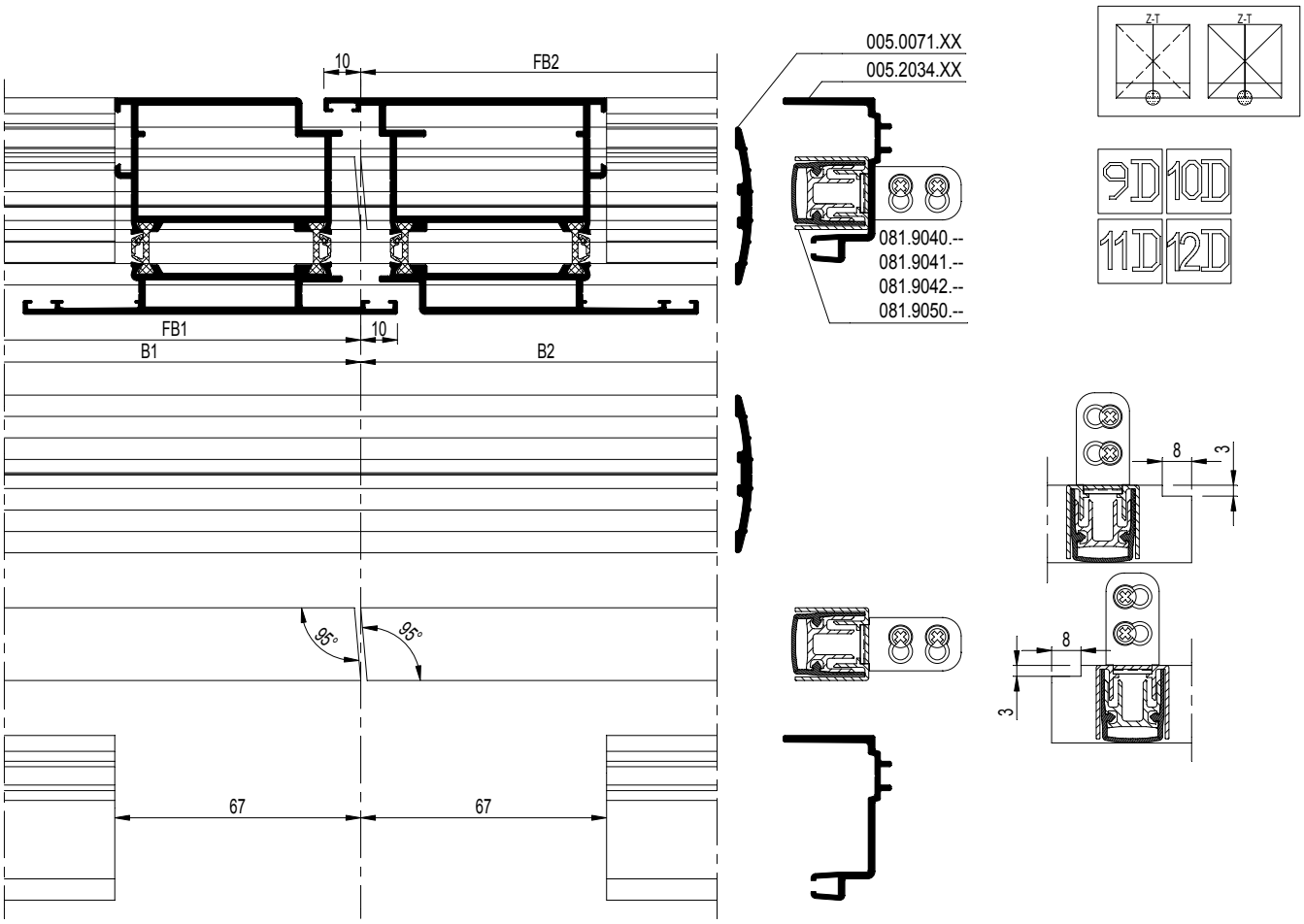

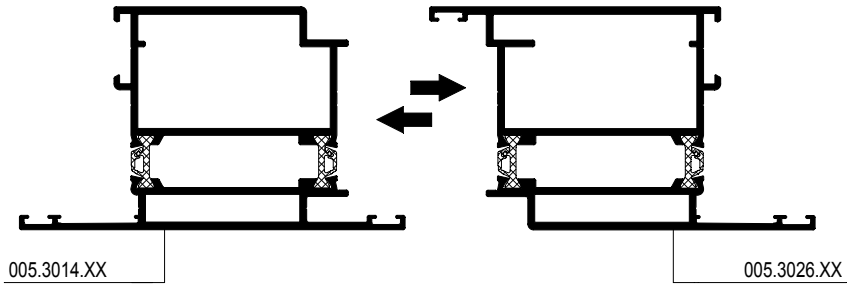

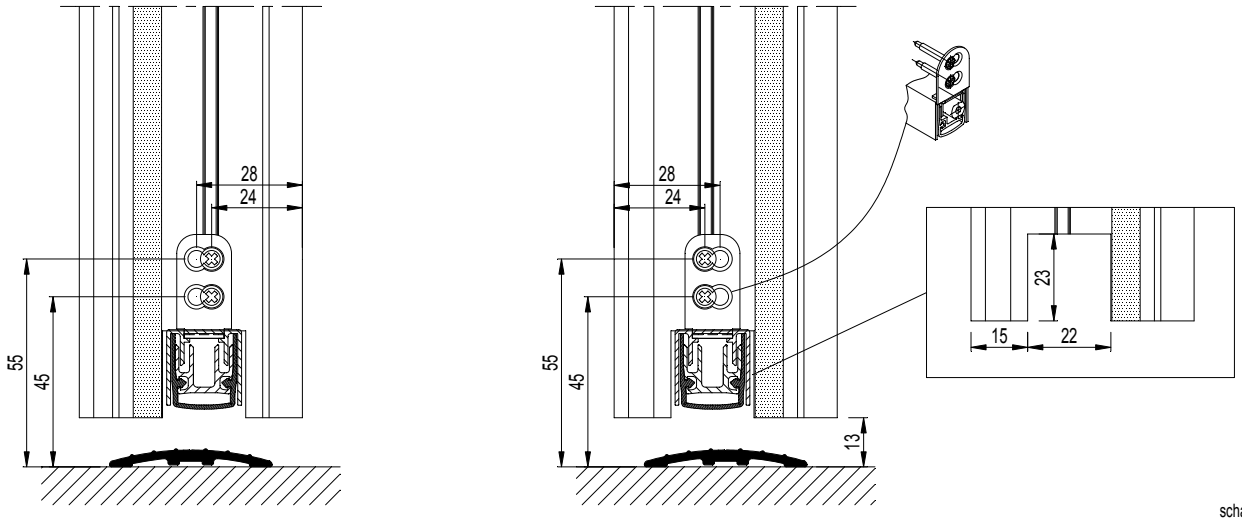

schaal - échelle
scale - Maßstab
1/2

D0081958

F

MONTAGE DEURSLUITER GEZE TS 4000 /TS 5000
MONTAGE FERMETURE PORTE GEZE TS 4000 / TS 5000
ASSEMBLY DOOR CLOSER GEZE TS 4000 / TS 5000
MONTAGE TUERSCHLIESSER GEZE TS 4000 / TS 5000

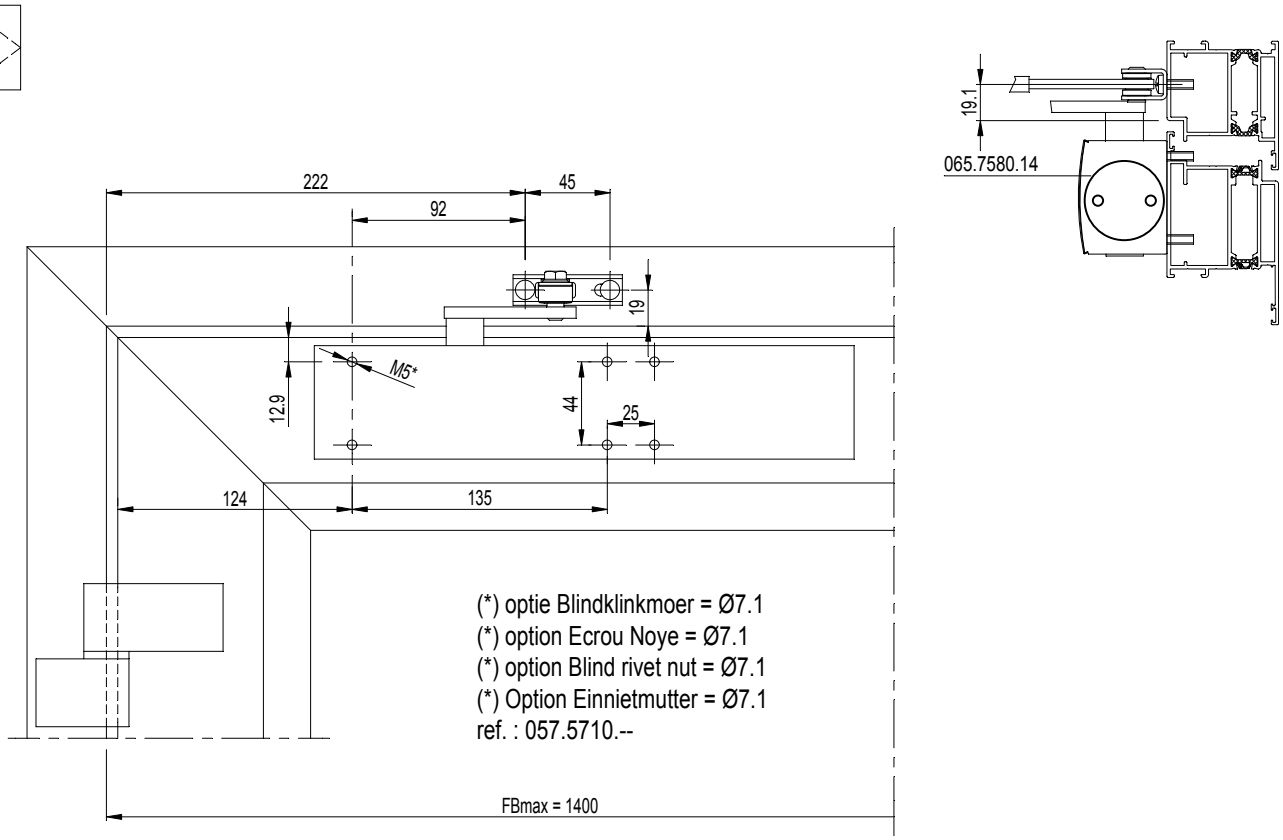

(*) optie Blindklinkmoer = Ø7.1
(*) option Ecrou Noye = Ø7.1
(*) option Blind rivet nut = Ø7.1
(*) Option Einnietmutter = Ø7.1
ref. : 057.5710.--

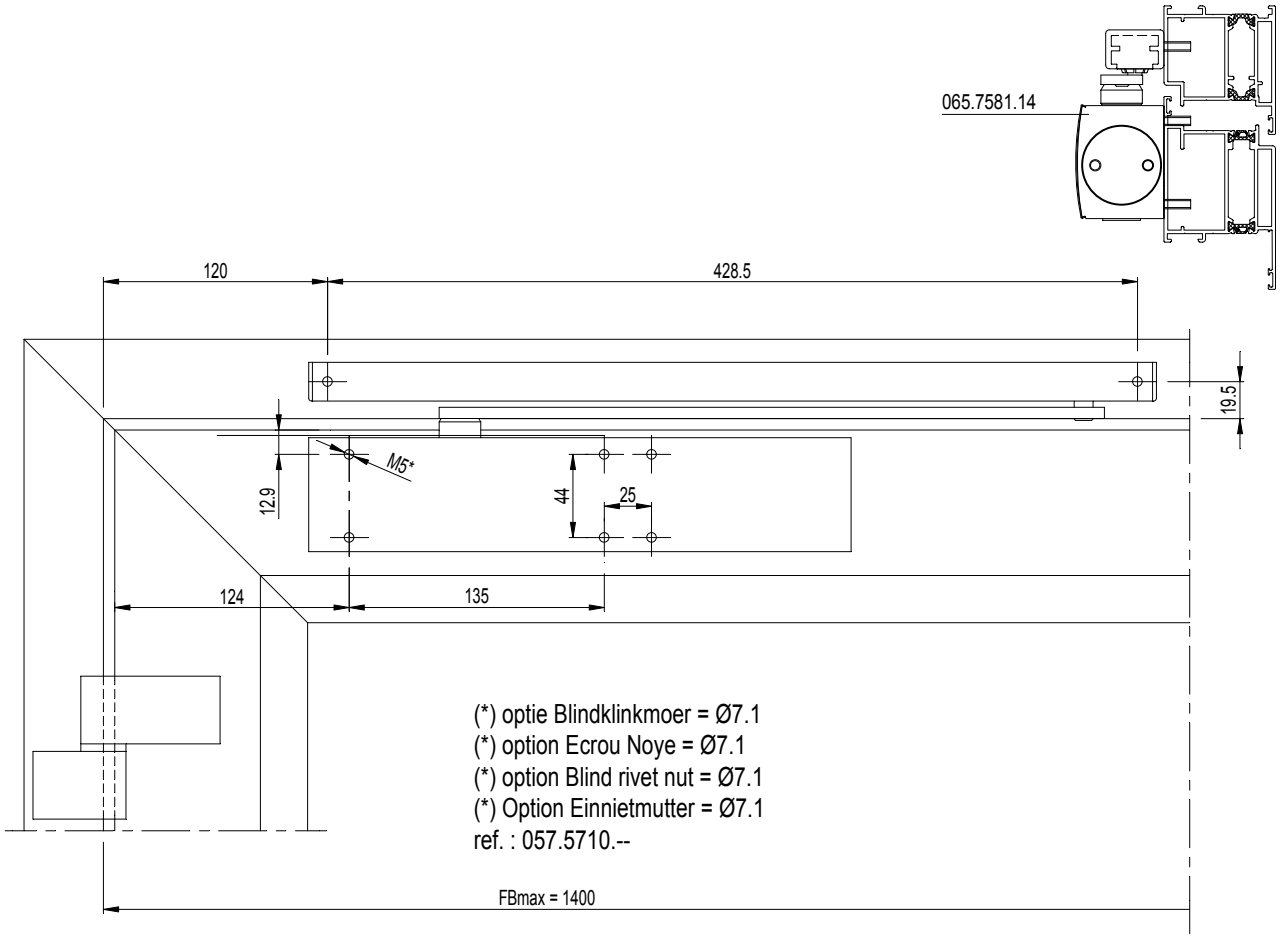

(*) optie Blindklinkmoer = Ø7.1
(*) option Ecrou Noye = Ø7.1
(*) option Blind rivet nut = Ø7.1
(*) Option Einnietmutter = Ø7.1
ref. : 057.5710.--

D0081962

F

MONTAGE DEURSLUITER GEZE TS 4000 /TS 5000
MONTAGE FERMETURE PORTE GEZE TS 4000 / TS 5000
ASSEMBLY DOOR CLOSER GEZE TS 4000 / TS 5000
MONTAGE TUERSCHLIESSER GEZE TS 4000 / TS 5000

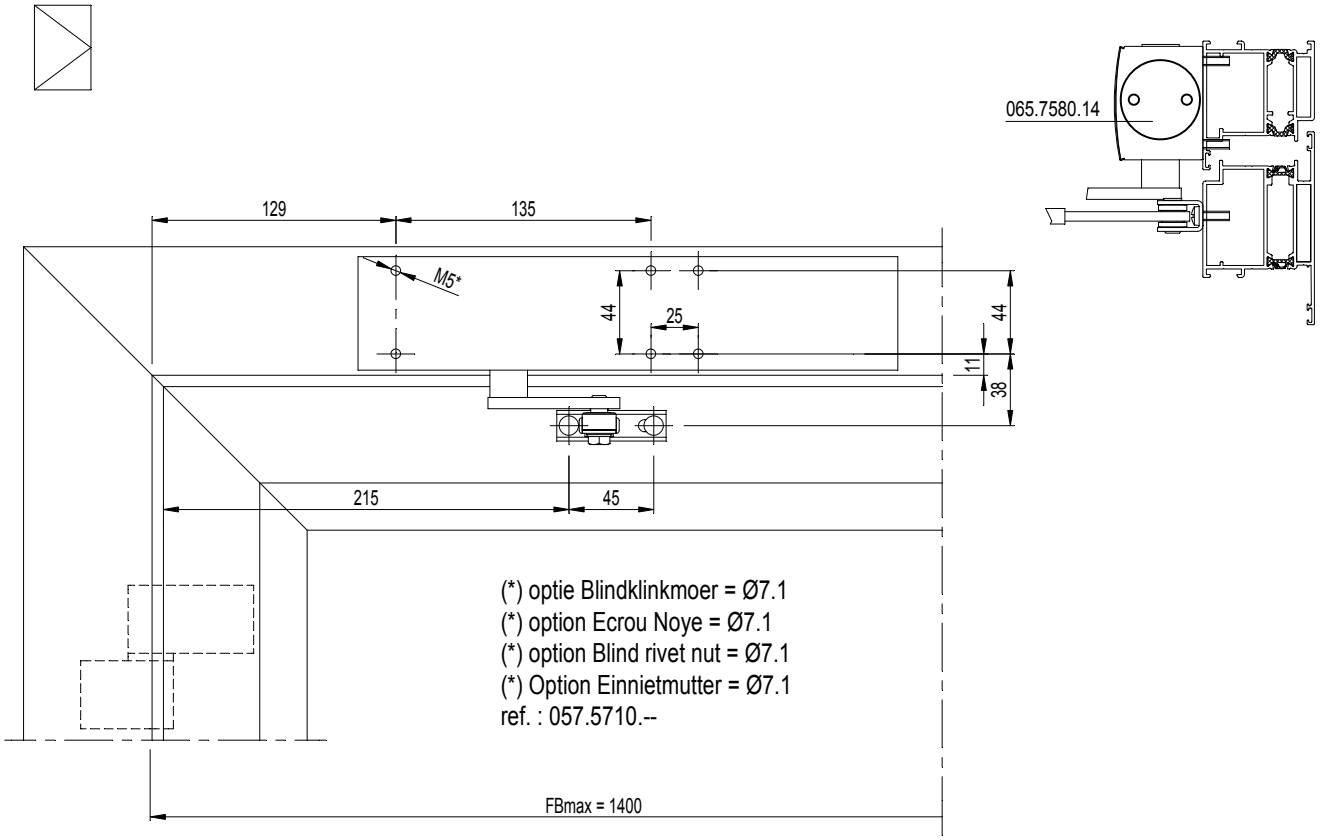

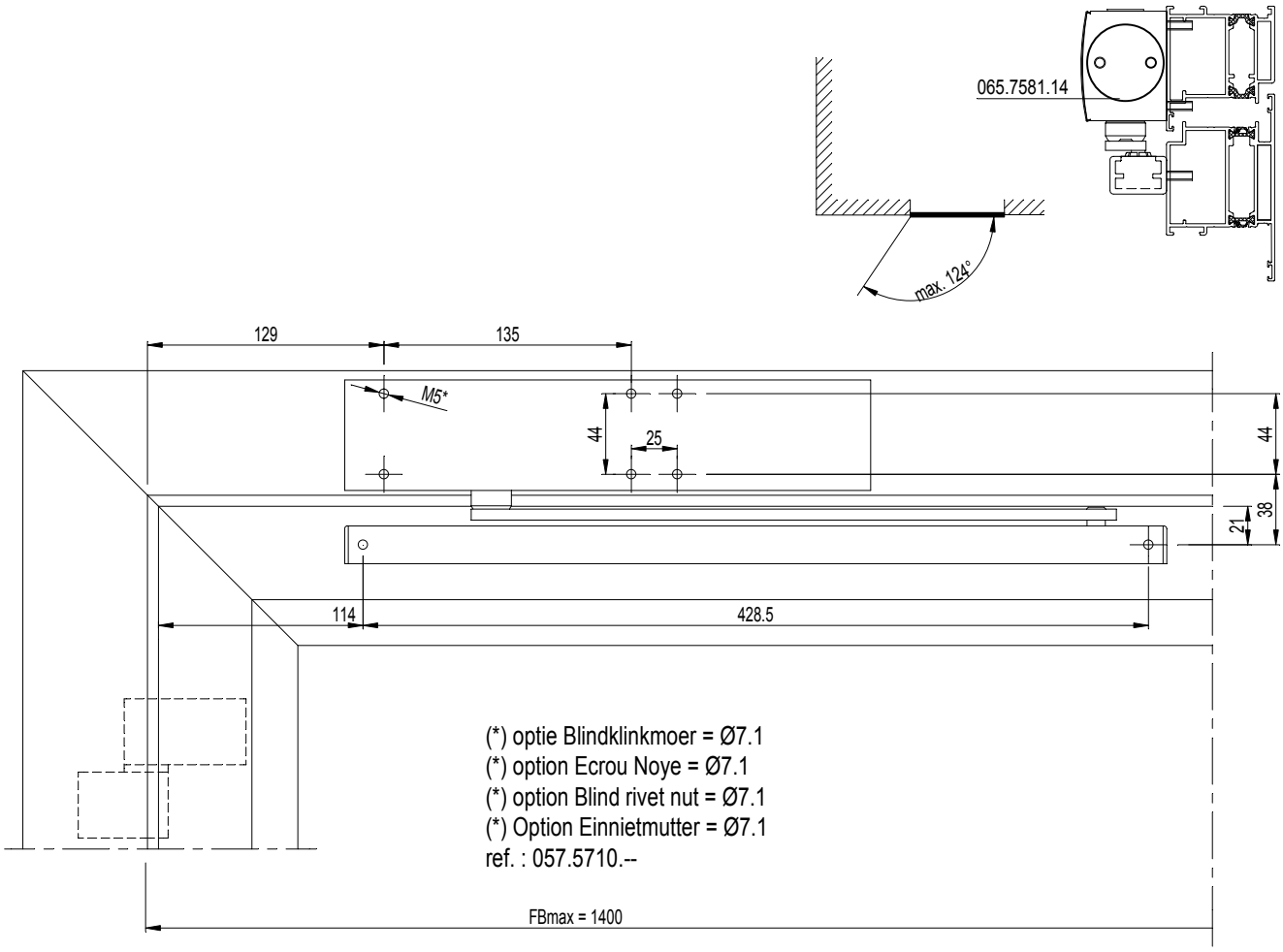

F

D0081962

MONTAGE DEURSLUITER BKS OTS 440
MONTAGE FERMETURE PORTE BKS OTS 440
ASSEMBLY DOOR CLOSER BKS OTS 440
MONTAGE TUERSCHLIESSER BKS OTS 440

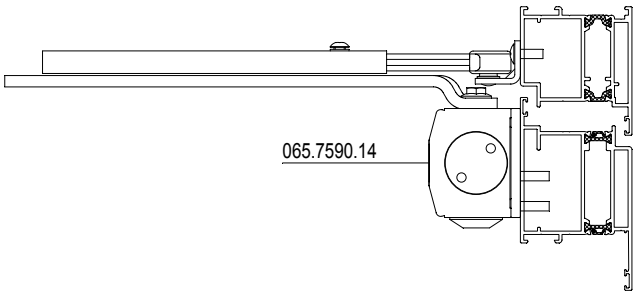

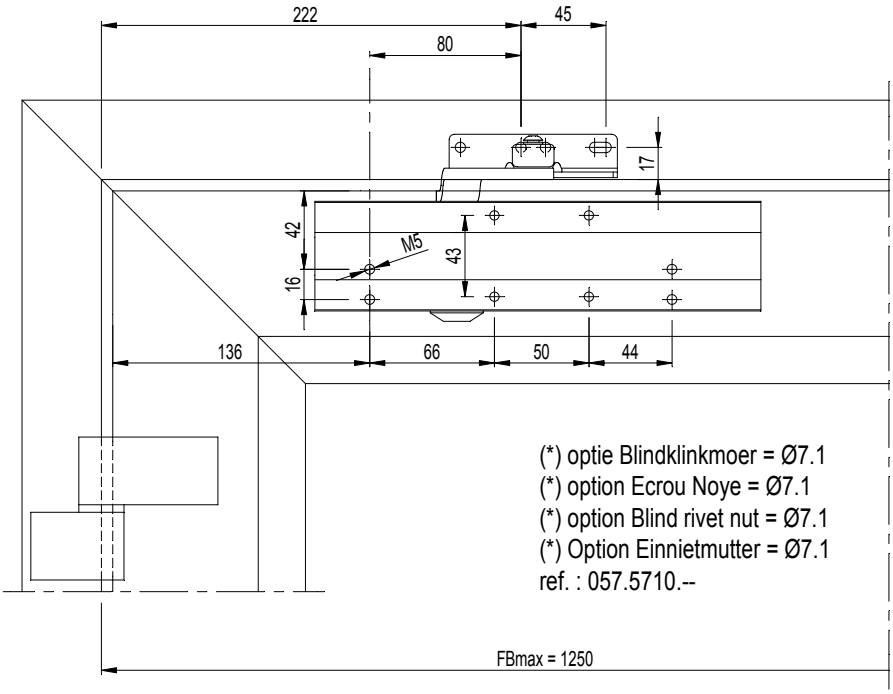

(*) optie Blindklinkmoer = Ø7.1
(*) option Ecrou Noye = Ø7.1
(*) option Blind rivet nut = Ø7.1
(*) Option Einnietmutter = Ø7.1
ref. : 057.5710.--

F

D0081963

MONTAGE DEURSLUITER BKS OTS 440
MONTAGE FERMETURE PORTE BKS OTS 440
ASSEMBLY DOOR CLOSER BKS OTS 440
MONTAGE TUERSCHLIESSER BKS OTS 440

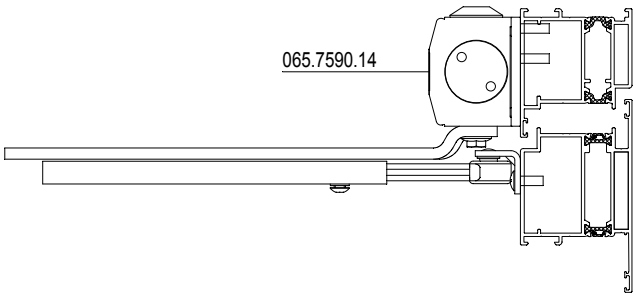

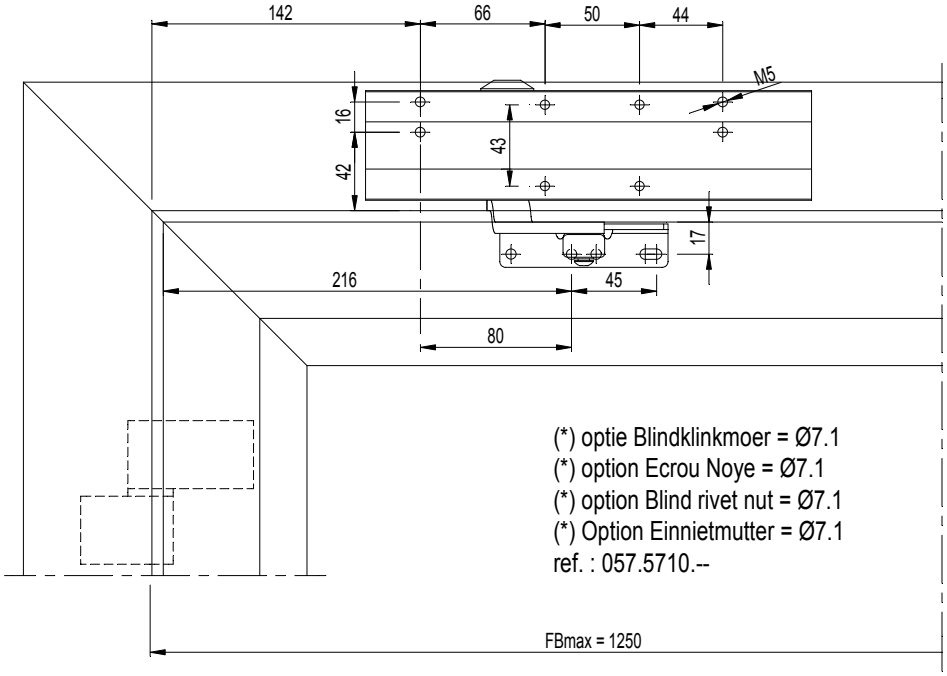

(*) optie Blindklinkmoer = Ø7.1
(*) option Ecrou Noye = Ø7.1
(*) option Blind rivet nut = Ø7.1
(*) Option Einnietmutter = Ø7.1
ref. : 057.5710.--

F

D0081963

Geteste Puiaansluitingen

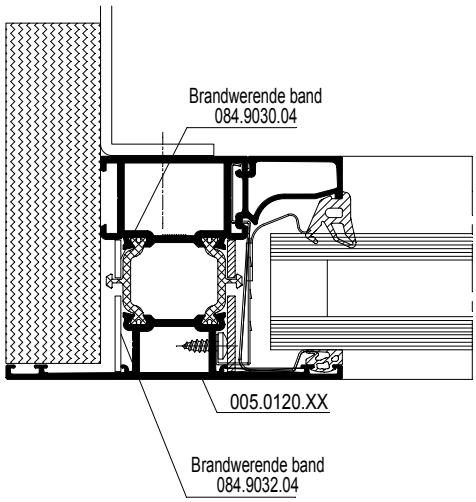

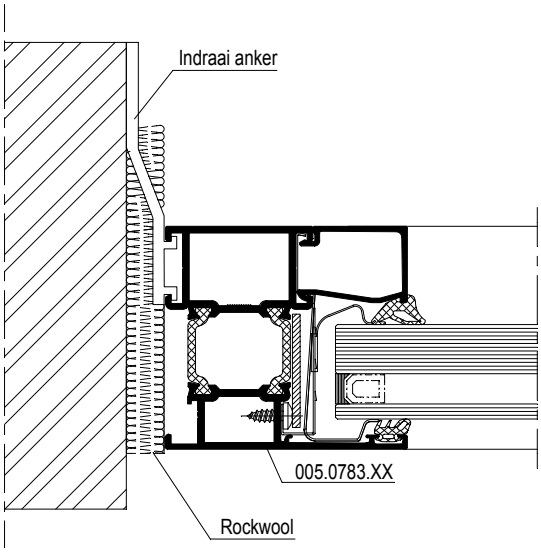

F

D0082562

Uitbreiding Puiaansluiting

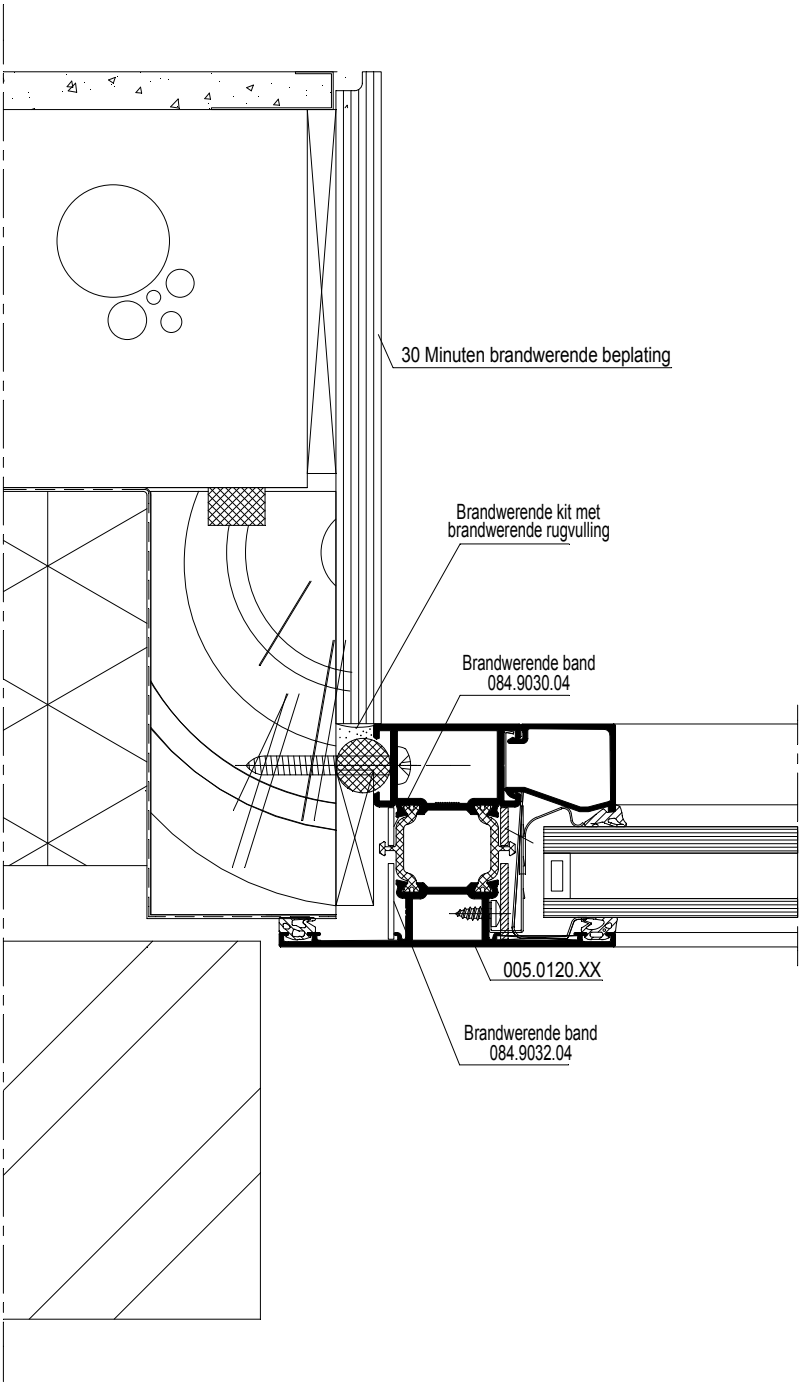

F

D0082562

F

G

Reynaers Aluminium

Toebehoren
Accessoires
Accessories
Zubehör

TOEBEHORENLIJST
LISTE DES ACCESSOIRES
LIST OF ACCESSORIES
LISTE VON ZUBEHOER

Reynaers Aluminium

Art. N°			Art. N°		
050.5153.–	12N.G.038	D0082266	061.7354.ZC	12N.G.050	D0082285
056.6297.00	12N.G.105	D0082489	061.7356.ZC	12N.G.051	D0082286
060.8715.00	12N.G.026	D0082212	061.7368.ZC	12N.G.052	D0082299
060.8716.00	12N.G.026	D0082212	061.7454.ZC	12N.G.050	D0082285
060.8723.–	12N.G.027	D0082218	061.7456.ZC	12N.G.051	D0082286
060.8724.00	12N.G.027	D0082218	061.7540.04	12N.G.088	D0082436
060.8746.00	12N.G.028	D0082229	061.7642.–	12N.G.068	D0082499
060.9118.–	12N.G.043	D0082575	061.7684.04	12N.G.058	D0082345
061.6455.–	12N.G.068	D0082499	061.7698.–	12N.G.053	D0082300
061.6968.XX	12N.G.069	D0082369	061.7699.–	12N.G.054	D0082308
061.6969.XX	12N.G.069	D0082369	061.7703.–	12N.G.053	D0082300
061.6970.XX	12N.G.069	D0082369	061.7704.–	12N.G.054	D0082308
061.6976.PA	12N.G.069	D0082369	061.7705.–	12N.G.055	D0082309
061.7025.–	12N.G.070	D0082372	061.7706.–	12N.G.055	D0082309
061.7026.–	12N.G.070	D0082372	061.7707.–	12N.G.053	D0082300
061.7035.–	12N.G.070	D0082372	061.7708.–	12N.G.054	D0082308
061.7037.–	12N.G.070	D0082372	061.7714.04	12N.G.058	D0082345
061.7039.–	12N.G.071	D0082375	061.7723.–	12N.G.058	D0082345
061.7040.–	12N.G.071	D0082375	061.7725.–	12N.G.058	D0082345
061.7042.–	12N.G.071	D0082375	061.7726.–	12N.G.058	D0082345
061.7043.–	12N.G.071	D0082375	061.7785.–	12N.G.057	D0082338
061.7044.–	12N.G.071	D0082375	061.7786.–	12N.G.057	D0082338
061.7045.–	12N.G.072	D0082381	061.7991.–	12N.G.059	D0082354
061.7046.–	12N.G.072	D0082381	061.7991.ZC	12N.G.059	D0082354
061.7047.–	12N.G.072	D0082381	061.7995.00	12N.G.066	D0082368
061.7092.–	12N.G.048	D0082611	061.7996.00	12N.G.066	D0082368
061.7093.–	12N.G.048	D0082611	061.7997.–	12N.G.067	D0082366
061.7094.–	12N.G.048	D0082611	061.7998.00	12N.G.067	D0082366
061.7095.–	12N.G.048	D0082611	061.8724.00	12N.G.067	D0082366
061.7097.–	12N.G.048	D0082611	061.8725.00	12N.G.067	D0082366
061.7098.–	12N.G.049	D0082612	061.9942.XX	12N.G.047	D0082610
061.7099.–	12N.G.049	D0082612	065.6380.XX	12N.G.078	D0082401
061.7118.XX	12N.G.044	D0082599	065.6381.XX	12N.G.078	D0082401
061.7119.XX	12N.G.044	D0082599	065.6385.XX	12N.G.073	D0082382
061.7120.XX	12N.G.044	D0082599	065.6391.XX	12N.G.073	D0082382
061.7121.XX	12N.G.045	D0082602	065.6394.XX	12N.G.073	D0082382
061.7122.XX	12N.G.045	D0082602	065.6395.–	12N.G.073	D0082382
061.7123.XX	12N.G.045	D0082602	065.6495.–	12N.G.086	D0082432
061.7150.–	12N.G.062	D0082359	065.6500.–	12N.G.086	D0082432
061.7151.–	12N.G.062	D0082359	065.6510.XX	12N.G.087	D0082435
061.7152.–	12N.G.064	D0082363	065.6514.XX	12N.G.087	D0082435
061.7153.01	12N.G.064	D0082363	065.6515.XX	12N.G.087	D0082435
061.7154.–	12N.G.064	D0082363	065.6600.–	12N.G.080	D0082415
061.7155.–	12N.G.066	D0082368	065.6601.–	12N.G.080	D0082415
061.7156.–	12N.G.066	D0082368	065.6603.–	12N.G.085	D0082431
061.7168.XX	12N.G.060	D0082355	065.6604.–	12N.G.085	D0082431
061.7169.–	12N.G.060	D0082355	065.6605.–	12N.G.085	D0082431
061.7170.–	12N.G.060	D0082355	065.6610.–	12N.G.080	D0082415
061.7173.17	12N.G.060	D0082355	065.6611.–	12N.G.080	D0082415
061.7174.17	12N.G.061	D0082357	065.6612.XX	12N.G.079	D0082405
061.7183.–	12N.G.061	D0082357	065.6613.–	12N.G.085	D0082431
061.7188.–	12N.G.061	D0082357	065.6614.–	12N.G.085	D0082431
061.7191.17	12N.G.061	D0082357	065.6615.–	12N.G.085	D0082431
061.7192.–	12N.G.061	D0082357	065.6656.XX	12N.G.075	D0082393
061.7194.–	12N.G.063	D0082361	065.6683.XX	12N.G.075	D0082393
061.7196.17	12N.G.063	D0082361	065.6684.XX	12N.G.076	D0082396
061.7198.–	12N.G.063	D0082361	065.6688.XX	12N.G.076	D0082396
061.7199.–	12N.G.063	D0082361	065.6689.XX	12N.G.077	D0082399
061.7200.–	12N.G.063	D0082361	065.6714.XX	12N.G.077	D0082399
061.7218.XX	12N.G.045	D0082602	065.6744.XX	12N.G.079	D0082405
061.7219.XX	12N.G.045	D0082602	065.6804.XX	12N.G.081	D0082419
061.7220.XX	12N.G.046	D0082606	065.6805.XX	12N.G.081	D0082419
061.7221.XX	12N.G.046	D0082606	065.6812.XX	12N.G.082	D0082423
061.7222.XX	12N.G.046	D0082606	065.6813.XX	12N.G.082	D0082423
061.7223.XX	12N.G.046	D0082606	065.6816.XX	12N.G.083	D0082427
061.7224.XX	12N.G.046	D0082606	065.6817.XX	12N.G.083	D0082427
061.7302.ZC	12N.G.056	D0082312	065.6822.XX	12N.G.084	D0082430
061.7303.ZC	12N.G.056	D0082312	065.6823.XX	12N.G.084	D0082430
061.7304.–	12N.G.057	D0082338	065.7580.14	12N.G.094	D0082459
061.7305.–	12N.G.057	D0082338	065.7581.14	12N.G.094	D0082459

TOEBEHORENLIJST
LISTE DES ACCESSOIRES
LIST OF ACCESSORIES
LISTE VON ZUBEHOER

Art. N°		
065.7582.14	12N.G.094	D0082459
068.5920.–	12N.G.039	D0082268
068.6355.–	12N.G.108	D0082493
068.6356.–	12N.G.108	D0082493
068.6361.–	12N.G.108	D0082493
068.6365.–	12N.G.108	D0082493
068.7738.00	12N.G.009	D0082128
068.7739.00	12N.G.009	D0082128
068.7746.00	12N.G.009	D0082128
068.7747.00	12N.G.009	D0082128
068.7794.00	12N.G.011	D0082139
068.7797.00	12N.G.011	D0082139
068.7850.00	12N.G.012	D0082144
068.7851.00	12N.G.012	D0082144
068.7853.00	12N.G.010	D0082129
068.7854.00	12N.G.010	D0082129
068.7855.00	12N.G.013	D0082155
068.7856.00	12N.G.013	D0082155
068.7857.00	12N.G.014	D0082162
068.7859.00	12N.G.015	D0082170
068.7860.00	12N.G.014	D0082162
068.7861.00	12N.G.015	D0082170
068.7952.00	12N.G.016	D0082171
068.7958.00	12N.G.016	D0082171
068.8090.00	12N.G.017	D0082175
068.8091.00	12N.G.017	D0082175
068.8678.04	12N.G.040	D0082276
068.8680.04	12N.G.040	D0082276
068.8681.04	12N.G.040	D0082276
068.8684.04	12N.G.041	D0082277
068.8730.00	12N.G.029	D0082234
068.8731.00	12N.G.029	D0082234
068.8732.00	12N.G.030	D0082241
068.8733.00	12N.G.030	D0082241
068.8734.00	12N.G.031	D0082244
068.8735.00	12N.G.031	D0082244
068.8736.00	12N.G.032	D0082246
068.8737.00	12N.G.032	D0082246
068.8738.00	12N.G.033	D0082251
068.8739.00	12N.G.033	D0082251
068.8740.00	12N.G.034	D0082255
068.8741.00	12N.G.034	D0082255
068.8742.00	12N.G.035	D0082256
068.8743.00	12N.G.035	D0082256
068.8779.00	12N.G.036	D0082261
068.8805.00	12N.G.018	D0082179
068.8807.00	12N.G.018	D0082179
068.8817.00	12N.G.018	D0082179
068.8838.00	12N.G.019	D0082185
068.8839.00	12N.G.019	D0082185
068.8840.00	12N.G.019	D0082185
068.8841.00	12N.G.020	D0082186
068.8842.00	12N.G.020	D0082186
068.8843.00	12N.G.020	D0082186
068.8844.00	12N.G.021	D0082194
068.8845.00	12N.G.021	D0082194
068.8846.00	12N.G.021	D0082194
068.8847.00	12N.G.022	D0082200
068.8871.00	12N.G.022	D0082200
068.8905.00	12N.G.023	D0082204
068.8906.04	12N.G.037	D0082264
068.8937.–	12N.G.039	D0082268
069.6565.04	12N.G.024	D0082208
069.6566.04	12N.G.024	D0082208
069.6567.04	12N.G.025	D0082211
069.6568.04	12N.G.025	D0082211
069.6571.04	12N.G.025	D0082211
069.6685.XX	12N.G.093	D0082456
069.6686.XX	12N.G.093	D0082456
069.6687.04	12N.G.093	D0082456

Art. N°		
069.6688.XX	12N.G.093	D0082456
069.6692.04	12N.G.090	D0082447
069.6693.04	12N.G.090	D0082447
069.6738.XX	12N.G.088	D0082436
069.6831.XX	12N.G.042	D0082280
069.6942.04	12N.G.092	D0082452
069.6945.04	12N.G.092	D0082452
069.7985.01	12N.G.065	D0082367
069.7986.–	12N.G.065	D0082367
069.7988.01	12N.G.065	D0082367
069.8430.04	12N.G.089	D0082440
069.8433.04	12N.G.088	D0082436
069.8439.04	12N.G.088	D0082436
069.8511.04	12N.G.091	D0082450
069.8512.04	12N.G.091	D0082450
069.8547.04	12N.G.090	D0082447
069.8550.04	12N.G.090	D0082447
080.8442.04	12N.G.100	D0082480
080.9074.04	12N.G.100	D0082480
080.9078.04	12N.G.100	D0082480
080.9100.04	12N.G.100	D0082480
080.9114.SY	12N.G.099	D0082478
080.9116.04	12N.G.099	D0082478
080.9118.04	12N.G.099	D0082478
080.9120.04	12N.G.099	D0082478
080.9123.SY	12N.G.096	D0082471
080.9125.SY	12N.G.097	D0082476
080.9126.SY	12N.G.098	D0082477
080.9128.SY	12N.G.098	D0082477
080.9130.SY	12N.G.098	D0082477
080.9381.04	12N.G.102	D0082485
080.9382.04	12N.G.102	D0082485
080.9383.04	12N.G.102	D0082485
080.9433.04	12N.G.101	D0082484
080.9440.04	12N.G.101	D0082484
080.9445.04	12N.G.101	D0082484
080.9449.04	12N.G.101	D0082484
080.9478.04	12N.G.103	D0082486
080.9650.04	12N.G.103	D0082486
081.9040.–	12N.G.095	D0082470
081.9041.–	12N.G.095	D0082470
081.9042.–	12N.G.095	D0082470
081.9140.04	12N.G.104	D0082488
081.9141.04	12N.G.104	D0082488
081.9142.04	12N.G.104	D0082488
081.9230.07	12N.G.104	D0082488
084.9010.04	12N.G.109	D0082497
084.9015.–	12N.G.107	D0082492
084.9016.–	12N.G.107	D0082492
084.9025.04	12N.G.109	D0082497
084.9026.04	12N.G.109	D0082497
084.9027.04	12N.G.109	D0082497
084.9028.04	12N.G.109	D0082497
084.9030.04	12N.G.110	D0082498
084.9031.04	12N.G.110	D0082498
084.9032.04	12N.G.110	D0082498
084.9103.04	12N.G.106	D0082490
084.9397.04 x 25mm	12N.G.102	D0082485

CS 68-FP
EW 30

OVERZICHT
APERCU
OVERVIEW
UEBERSICHT

050.5153.-- (12N.G.040)

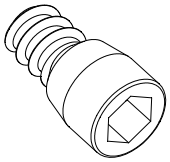

056.6297.00 (12N.G.108)

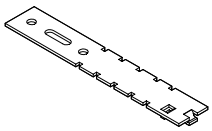

060.8715.00 (12N.G.028)

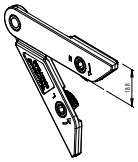

060.8716.00 (12N.G.028)

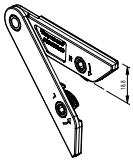

060.8723.-- (12N.G.029)

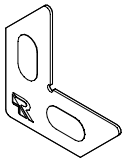

060.8724.00 (12N.G.029)

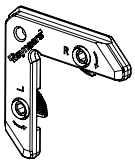

060.8746.00 (12N.G.030)

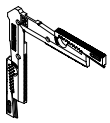

060.9118.-- (12N.G.045)

061.6455.-- (12N.G.071)

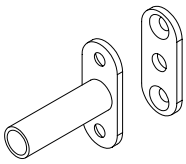

061.6968.XX (12N.G.072)

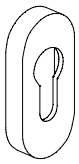

061.6969.XX (12N.G.072)

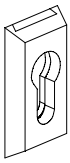

061.6970.XX (12N.G.072)

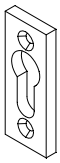

061.6976.XX (12N.G.072)

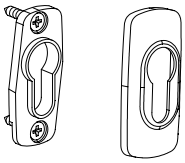

061.7025.-- (12N.G.073)

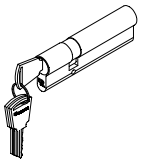

061.7026.-- (12N.G.073)

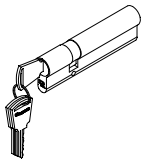

061.7035.-- (12N.G.073)

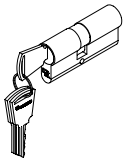

061.7037.-- (12N.G.073)

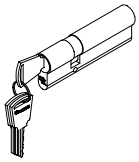

061.7039.-- (12N.G.074)

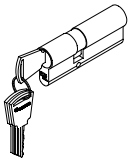

061.7040.-- (12N.G.074)

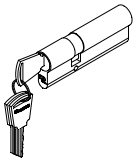

061.7042.-- (12N.G.074)

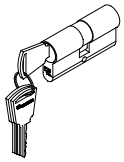

061.7043.-- (12N.G.074)

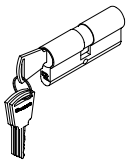

061.7044.-- (12N.G.074)

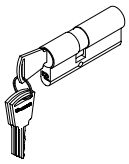

061.7045.-- (12N.G.075)

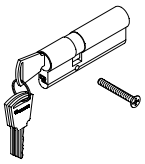

061.7046.-- (12N.G.075)

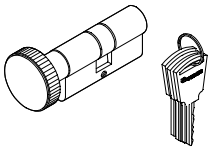

061.7047.-- (12N.G.075)

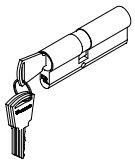

061.7092.-- (12N.G.051)

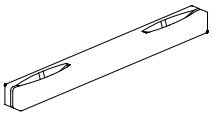

061.7093.-- (12N.G.051)

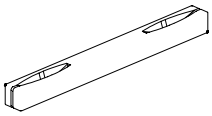

061.7094.-- (12N.G.051)

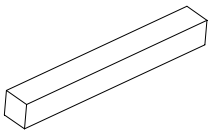

061.7095.-- (12N.G.051)

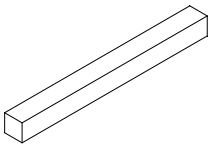

061.7097.-- (12N.G.051)

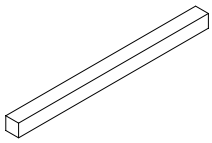

061.7098.-- (12N.G.052)

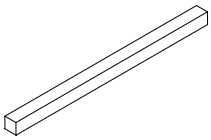

061.7099.-- (12N.G.052)

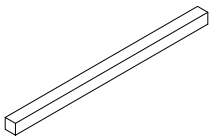

061.7118.XX (12N.G.047)

061.7119.XX (12N.G.047)

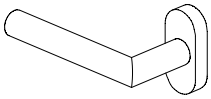

061.7120.XX (12N.G.047)

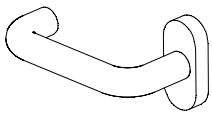

D0083553

G

CS 68-FP
EW 30

OVERZICHT
APERCU
OVERVIEW
UEBERSICHT

Reynaers Aluminium

061.7121.XX (12N.G.048)

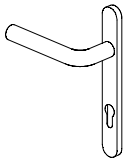

061.7122.XX (12N.G.048)

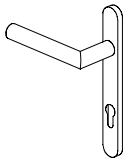

061.7123.XX (12N.G.048)

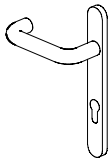

061.7150.-- (12N.G.065)

061.7151.-- (12N.G.065)

061.7152.-- (12N.G.067)

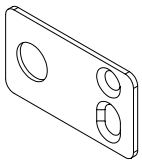

061.7153.01 (12N.G.067)

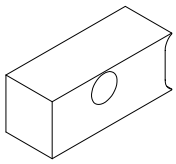

061.7154.-- (12N.G.067)

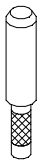

061.7155.-- (12N.G.069)

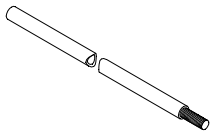

061.7156.-- (12N.G.069)

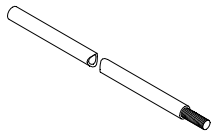

061.7168.XX (12N.G.063)

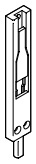

061.7169.-- (12N.G.063)

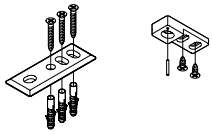

061.7170.-- (12N.G.063)

061.7173.17 (12N.G.063)

061.7174.17 (12N.G.064)

061.7183.-- (12N.G.064)

061.7188.-- (12N.G.064)

061.7191.17 (12N.G.064)

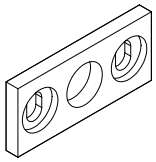

061.7192.-- (12N.G.064)

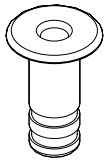

061.7194.-- (12N.G.066)

061.7196.17 (12N.G.066)

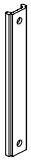

061.7198.-- (12N.G.066)

061.7199.-- (12N.G.066)

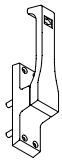

061.7200.-- (12N.G.066)

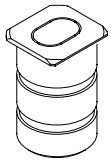

061.7218.XX (12N.G.048)

061.7219.XX (12N.G.048)

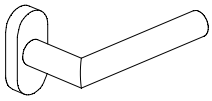

061.7220.XX (12N.G.049)

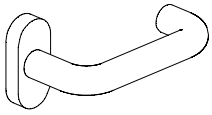

061.7221.XX (12N.G.049)

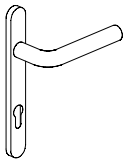

061.7222.XX (12N.G.049)

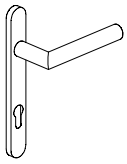

061.7223.XX (12N.G.049)

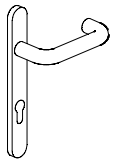

061.7224.XX (12N.G.049)

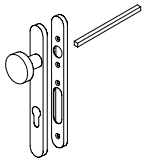

061.7302.ZC (12N.G.059)

061.7303.ZC (12N.G.059)

061.7304.-- (12N.G.060)

061.7305.-- (12N.G.060)

D0083554

G

OVERZICHT
APERCU
OVERVIEW
UEBERSICHT

061.7354.ZC (12N.G.053)

061.7356.ZC (12N.G.054)

061.7368.ZC (12N.G.055)

061.7454.ZC (12N.G.053)

061.7456.ZC (12N.G.054)

061.7540.04 (12N.G.091)

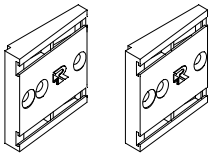

061.7642.-- (12N.G.071)

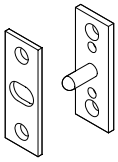

061.7684.04 (12N.G.061)

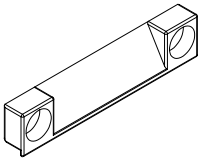

061.7698.-- (12N.G.056)

061.7699.-- (12N.G.057)

061.7703.-- (12N.G.056)

061.7704.-- (12N.G.057)

061.7705.-- (12N.G.058)

061.7706.-- (12N.G.058)

061.7707.-- (12N.G.056)

061.7708.-- (12N.G.057)

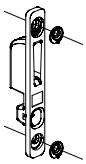

061.7714.04 (12N.G.061)

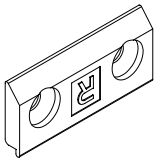

061.7723.-- (12N.G.061)

061.7725.-- (12N.G.061)

061.7726.-- (12N.G.061)

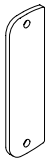

061.7785.-- (12N.G.060)

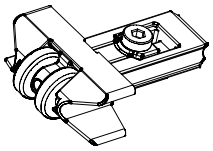

061.7786.-- (12N.G.060)

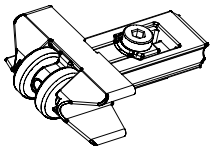

061.7991.ZC (12N.G.062)

061.7995.00 (12N.G.069)

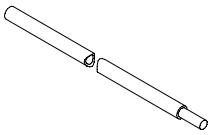

061.7996.00 (12N.G.069)

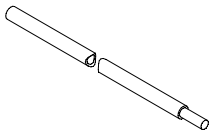

061.7997.-- (12N.G.070)

061.7998.00 (12N.G.070)

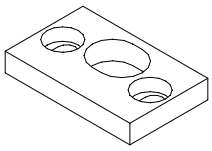

061.8724.00 (12N.G.070)

061.8725.00 (12N.G.070)

061.9942.XX (12N.G.050)

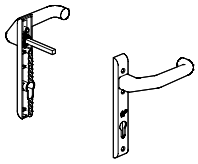

065.6380.XX (12N.G.081)

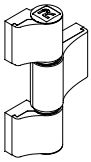

065.6381.XX (12N.G.081)

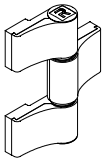

065.6385.XX (12N.G.076)

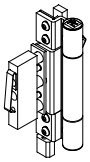

065.6391.XX (12N.G.076)

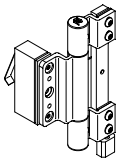

065.6394.XX (12N.G.076)

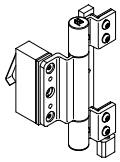

D0083555

OVERZICHT
APERCU
OVERVIEW
UEBERSICHT

065.6395.-- (12N.G.076)

065.6495.-- (12N.G.089)

065.6500.-- (12N.G.089)

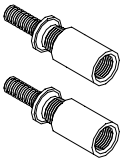

065.6510.XX (12N.G.090)

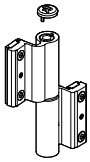

065.6514.XX (12N.G.090)

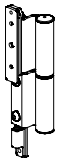

065.6515.XX (12N.G.090)

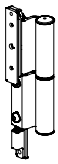

065.6600.-- (12N.G.083)

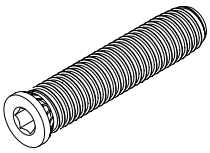

065.6601.-- (12N.G.083)

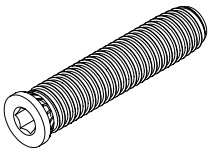

065.6603.-- (12N.G.088)

065.6604.-- (12N.G.088)

065.6605.-- (12N.G.088)

065.6610.-- (12N.G.083)

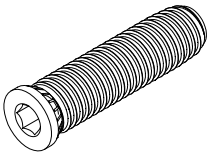

065.6611.-- (12N.G.083)

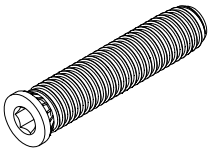

065.6612.XX (12N.G.082)

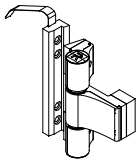

065.6613.-- (12N.G.088)

065.6614.-- (12N.G.088)

065.6615.-- (12N.G.088)

065.6656.XX (12N.G.078)

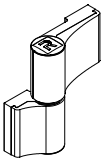

065.6683.XX (12N.G.078)

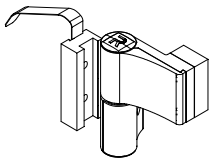

065.6684.XX (12N.G.079)

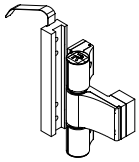

065.6688.XX (12N.G.079)

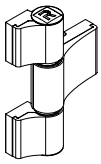

065.6689.XX (12N.G.080)

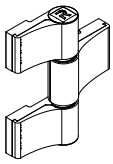

065.6714.XX (12N.G.080)

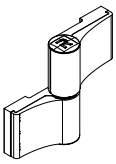

065.6744.XX (12N.G.082)

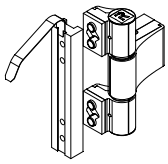

065.6804.XX (12N.G.084)

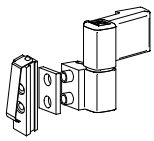

065.6805.XX (12N.G.084)

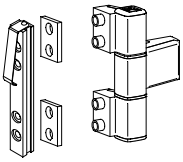

065.6812.XX (12N.G.085)

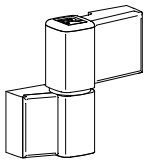

065.6813.XX (12N.G.085)

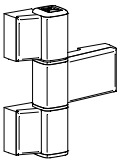

065.6816.XX (12N.G.086)

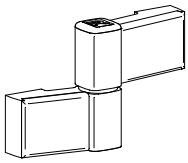

065.6817.XX (12N.G.086)

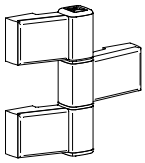

065.6822.XX (12N.G.087)

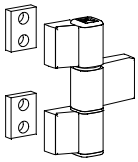

065.6823.XX (12N.G.087)

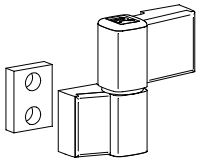

065.7580.14 (12N.G.097)

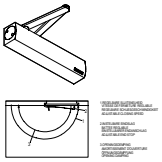

065.7581.14 (12N.G.097)

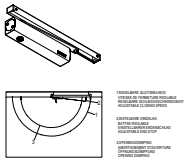

065.7582.14 (12N.G.097)

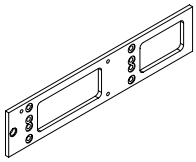

D0083556

G

OVERZICHT
APERCU
OVERVIEW
UEBERSICHT

068.5920.-- (12N.G.041)

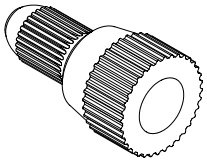

068.6355.-- (12N.G.111)

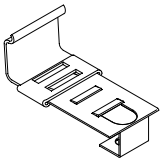

068.6356.-- (12N.G.111)

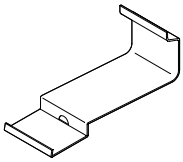

068.6361.-- (12N.G.111)

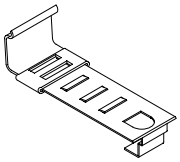

068.6365.-- (12N.G.111)

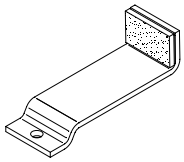

068.7738.00 (12N.G.011)

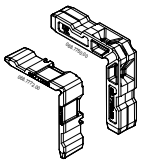

068.7739.00 (12N.G.011)

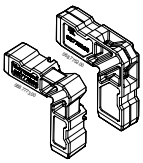

068.7746.00 (12N.G.011)

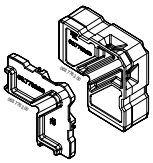

068.7747.00 (12N.G.011)

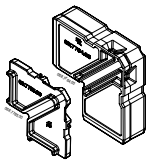

068.7794.00 (12N.G.013)

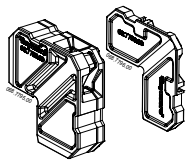

068.7797.00 (12N.G.013)

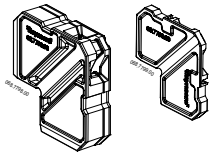

068.7850.00 (12N.G.014)

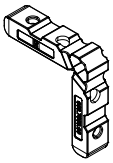

068.7851.00 (12N.G.014)

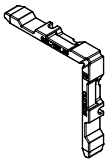

068.7853.00 (12N.G.012)

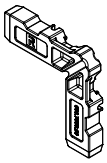

068.7854.00 (12N.G.012)

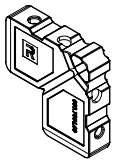

068.7855.00 (12N.G.015)

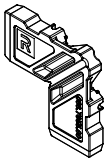

068.7856.00 (12N.G.015)

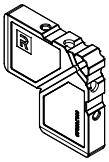

068.7857.00 (12N.G.016)

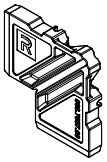

068.7859.00 (12N.G.017)

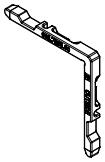

068.7860.00 (12N.G.016)

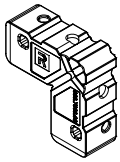

068.7861.00 (12N.G.017)

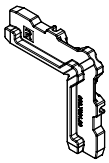

068.7952.00 (12N.G.018)

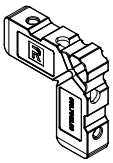

068.7958.00 (12N.G.018)

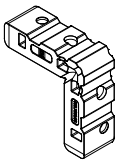

068.8090.00 (12N.G.019)

068.8091.00 (12N.G.019)

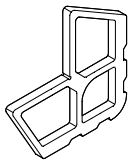

068.8678.04 (12N.G.042)

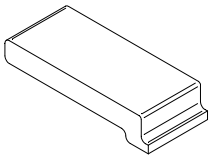

068.8680.04 (12N.G.042)

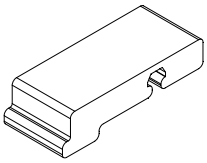

068.8681.04 (12N.G.042)

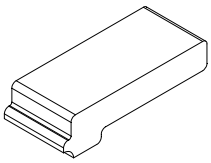

068.8684.04 (12N.G.043)

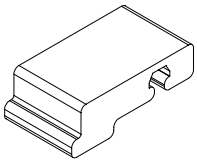

068.8730.00 (12N.G.031)

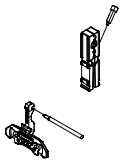

068.8731.00 (12N.G.031)

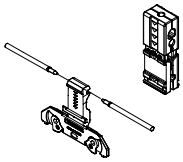

068.8732.00 (12N.G.032)

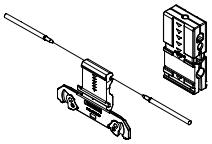

068.8733.00 (12N.G.032)

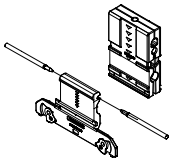

068.8734.00 (12N.G.033)

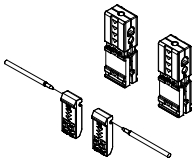

068.8735.00 (12N.G.033)

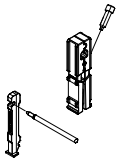

OVERZICHT
APERCU
OVERVIEW
UEBERSICHT

068.8736.00 (12N.G.034)

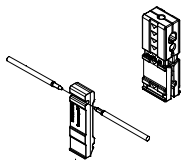

068.8737.00 (12N.G.034)

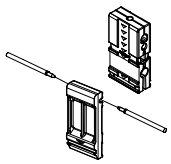

068.8738.00 (12N.G.035)

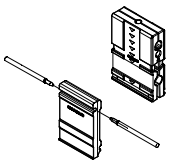

068.8739.00 (12N.G.035)

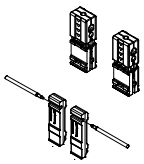

068.8740.00 (12N.G.036)

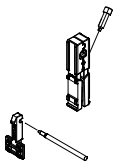

068.8741.00 (12N.G.036)

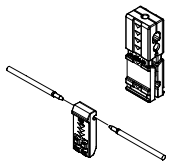

068.8742.00 (12N.G.037)

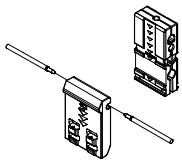

068.8743.00 (12N.G.037)

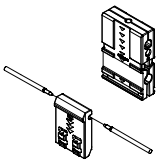

068.8779.00 (12N.G.038)

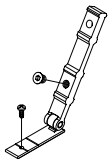

068.8805.00 (12N.G.020)

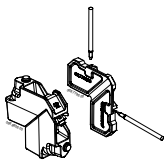

068.8807.00 (12N.G.020)

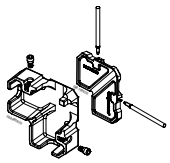

068.8817.00 (12N.G.020)

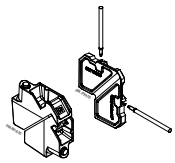

068.8838.00 (12N.G.021)

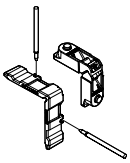

068.8839.00 (12N.G.021)

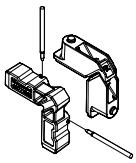

068.8840.00 (12N.G.021)

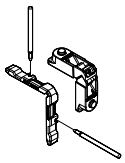

068.8841.00 (12N.G.022)

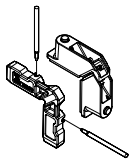

068.8842.00 (12N.G.022)

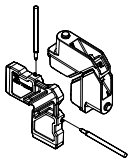

068.8843.00 (12N.G.022)

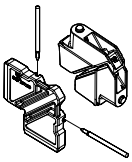

068.8844.00 (12N.G.023)

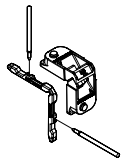

068.8845.00 (12N.G.023)

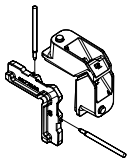

068.8846.00 (12N.G.023)

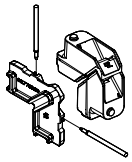

068.8847.00 (12N.G.024)

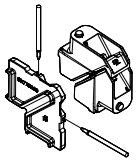

068.8871.00 (12N.G.024)

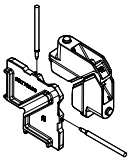

068.8905.00 (12N.G.025)

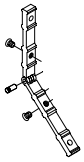

068.8906.04 (12N.G.039)

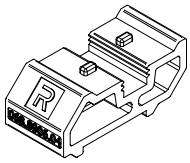

068.8937.-- (12N.G.041)

X st./pc
068.8937.--

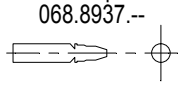

-
Ø4 x 60

069.6565.04 (12N.G.026)

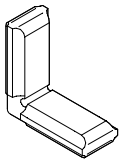

069.6566.04 (12N.G.026)

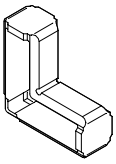

069.6567.04 (12N.G.027)

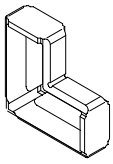

069.6568.04 (12N.G.027)

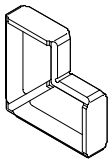

069.6571.04 (12N.G.027)

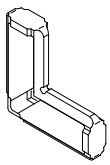

069.6685.04 (12N.G.096)

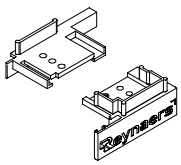

069.6686.04 (12N.G.096)

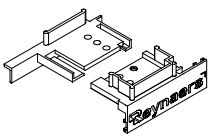

069.6687.04 (12N.G.096)

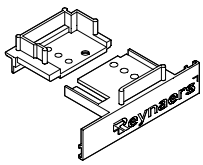

069.6688.04 (12N.G.096)

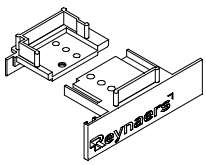

D0083558

CS 68-FP
EW 30

OVERZICHT
APERCU
OVERVIEW
UEBERSICHT

069.6692.04 (12N.G.093)

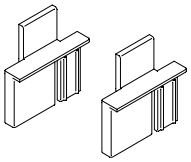

069.6693.04 (12N.G.093)

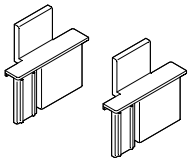

069.6738.04 (12N.G.091)

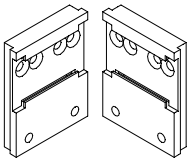

069.6831.XX (12N.G.044)

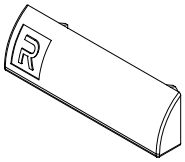

069.6942.04 (12N.G.095)

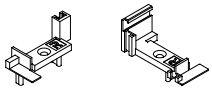

069.6945.04 (12N.G.095)

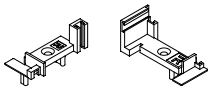

069.7985.01 (12N.G.068)

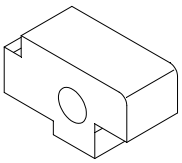

069.7986.-- (12N.G.068)

069.7988.01 (12N.G.068)

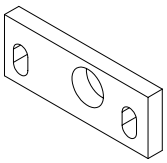

069.8430.04 (12N.G.092)

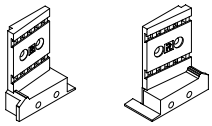

069.8433.04 (12N.G.091)

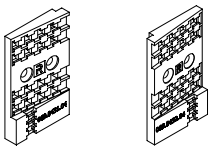

069.8439.04 (12N.G.091)

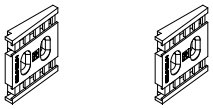

069.8511.04 (12N.G.094)

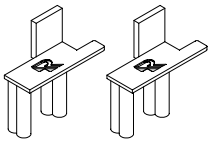

069.8512.04 (12N.G.094)

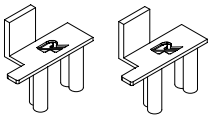

069.8547.04 (12N.G.093)

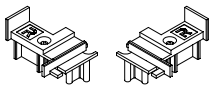

069.8550.04 (12N.G.093)

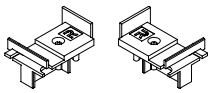

080.8442.04 (12N.G.103)

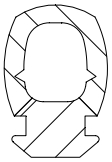

080.9074.04 (12N.G.103)

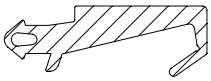

080.9078.04 (12N.G.103)

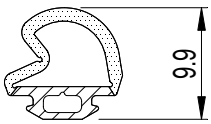

080.9100.04 (12N.G.103)

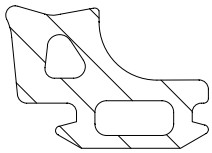

080.9114.SY (12N.G.102)

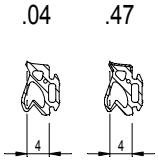

080.9116.04 (12N.G.102)

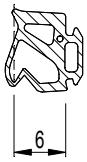

080.9118.04 (12N.G.102)

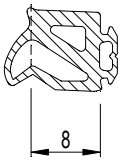

080.9120.04 (12N.G.102)

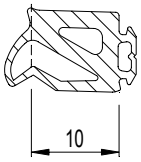

080.9123.SY (12N.G.099)

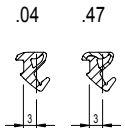

080.9125.SY (12N.G.100)

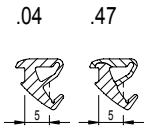

080.9126.SY (12N.G.101)

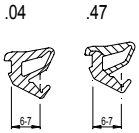

080.9128.SY (12N.G.101)

080.9130.SY (12N.G.101)

080.9381.04 (12N.G.105)

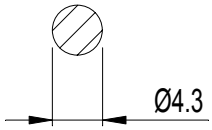

080.9382.04 (12N.G.105)

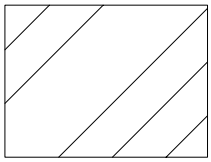

080.9383.04 (12N.G.105)

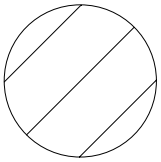

080.9433.04 (12N.G.104)

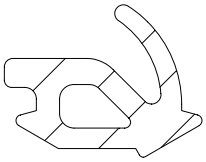

080.9440.04 (12N.G.104)

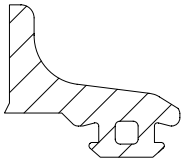

080.9445.04 (12N.G.104)

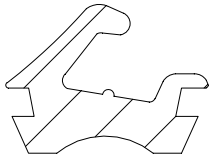

D00183569

G

CS 68-FP
EW 30

OVERZICHT
APERCU
OVERVIEW
UEBERSICHT

080.9449.04 (12N.G.104)	080.9478.04 (12N.G.106)	080.9650.04 (12N.G.106)	081.9040.-- (12N.G.098)	081.9041.-- (12N.G.098)
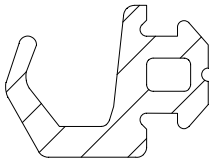	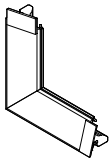	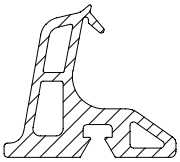	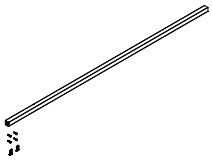	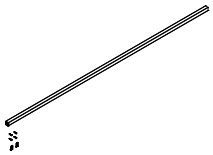
081.9042.-- (12N.G.098)	081.9140.04 (12N.G.107)	081.9141.04 (12N.G.107)	081.9142.04 (12N.G.107)	081.9230.07 (12N.G.107)
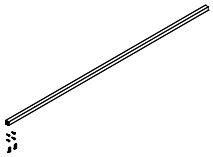				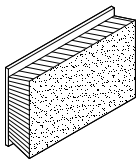
084.9010.04 (12N.G.112)	084.9015.-- (12N.G.110)	084.9016.-- (12N.G.110)	084.9025.04 (12N.G.112)	084.9026.04 (12N.G.112)
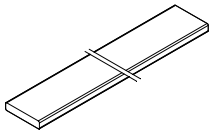	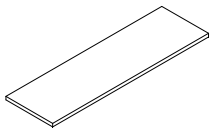	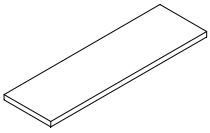	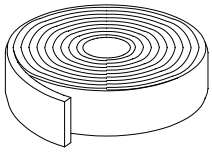	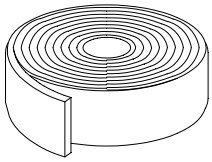
084.9027.04 (12N.G.112)	084.9028.04 (12N.G.112)	084.9030.04 (12N.G.113)	084.9031.04 (12N.G.113)	084.9032.04 (12N.G.113)
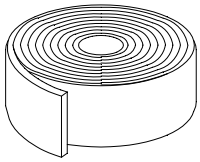	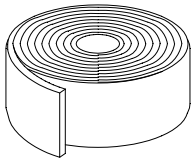	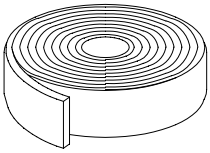	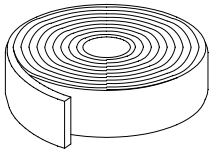	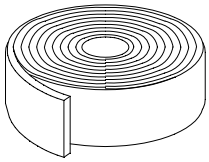
084.9103.04 (12N.G.109)	084.9397.04 (12N.G.105)			
	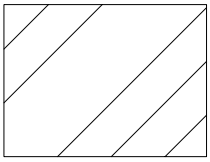			

D0003560

PERSHOEKEN
EQUERRES A SERTIR
CRIMP CORNER CLEATS
PRESSECKWINKEL

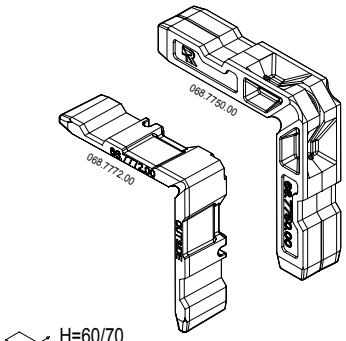

H=60/70
B=60/70
D=19.3/17.3

068.7738.00

PERSHOEKEN 5.1x19.3 - 12.8x17.3
EQUERRES A SERTIR 5.1x19.3 - 12.8x17.3
CRIMP CORNER CLEATS 5.1x19.3 - 12.8x17.3
PRESSECKWINKEL 5.1x19.3 - 12.8x17.3

CS 68-Re
005.1213.XX
005.1236.XX

CS 68-So
005.1249.XX
005.1270.XX

CS 59-Re
CS 59-So
CS 77-Re

CS 59
CS 68

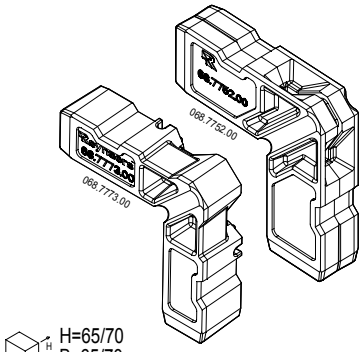

H=65/70
B=65/70
D=19.3/17.3

068.7739.00

PERSHOEKEN 17.8x19.3 - 25.8x17.3
EQUERRES A SERTIR 17.8x19.3 - 25.8x17.3
CRIMP CORNER CLEATS 17.8x19.3 - 25.8x17.3
PRESSECKWINKEL 17.8x19.3 - 25.8x17.3

CS 68-Re
005.1216.XX
005.1220.XX

CS 68-So
005.1250.XX
005.1271.XX

CS 59-Re
CS 59-So
CS 77-Re

CS 59
CS 68

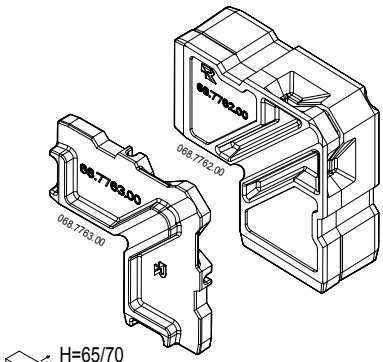

H=65/70
B=65/70
D=10.3/26.3

068.7746.00

PERSHOEKEN 30.8x10.3 - 43.3x26.3
EQUERRES A SERTIR 30.8x10.3 - 43.3x26.3
CRIMP CORNER CLEATS 30.8x10.3 - 43.3x26.3
PRESSECKWINKEL 30.8x10.3 - 43.3x26.3

CS 68
005.0112.XX

CS 59
CS 77
CS 86-HI

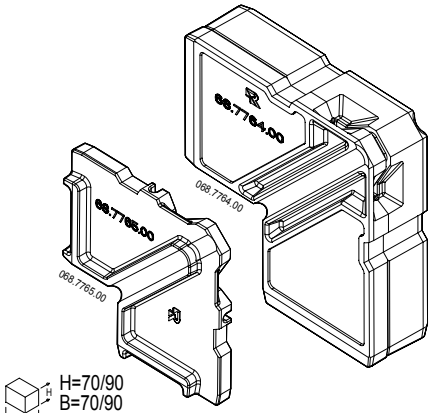

H=70/90
B=70/90
D=10.3/26.3

068.7747.00

PERSHOEKEN 43.8x10.3 - 56.3x26.3
EQUERRES A SERTIR 43.8x10.3 - 56.3x26.3
CRIMP CORNER CLEATS 43.8x10.3 - 56.3x26.3
PRESSECKWINKEL 43.8x10.3 - 56.3x26.3

CS 68
005.0121.XX
005.1521.XX

CS 68-Re
005.0221.XX

CS 68-So
005.0252.XX

CS 59
CS 59-Re
CS 59-So
CS 77
CS 86-HI
CS 77-Re

D0082128

PERSHOEKEN
EQUERRES A SERTIR
CRIMP CORNER CLEATS
PRESSECKWINKEL

Reynaers Aluminium

068.7853.00

PERSHOEK 17.85x11.75
EQUERRE A SERTIR 17.85x11.75
CRIMP CORNER CLEAT 17.85x11.75
PRESSECKWINKEL 17.85x11.75

2 st./pc
068.5938.--
-
Ø4 x 60

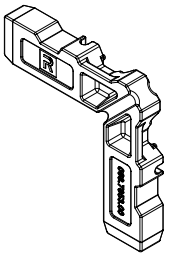

CS 68	005.1492.XX	CW 86			
005.0111.XX	0OS.4853.XX	CS 77-HV			
005.0120.XX		CS 86-HI			
005.0142.XX	CS 68-HV	CS 77-Re			
005.0183.XX	005.1583.XX	CF 77			
005.0258.XX		CS 104			
005.0420.XX	CS 68-FP				
005.0448.XX	005.0709.XX				
005.0452.XX	005.0719.XX				
005.0540.XX	005.0747.XX				
005.0893.XX	005.0783.XX				
005.1100.XX					
005.1109.XX	CS 59				
005.1110.XX	CS 59-AD				
005.1416.XX	TP 110				
005.1443.XX	CP 130				
005.1449.XX	CP 130-LS				
005.1455.XX	CP 155				
005.1456.XX	CP 155-LS				
005.1483.XX	CS 77				

068.5938.-- = Corner Cleat drive pin
H=65 B=65 D=11.75

068.7854.00

HOEKVERBINDER 38.95x17.4
EQUERRE 38.95x17.4
CORNER CLEAT 38.95x17.4
ECKVERBINDER 38.95x17.4

2 st./pc
050.5153.--
-
4.8 x 13.8

2 st./pc
068.5920.--
REYNAERS
4 x 14

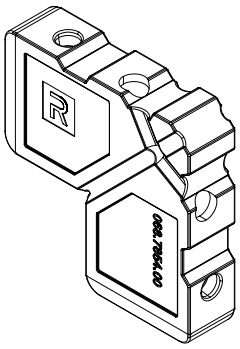

CS 68	CS 59				
005.0114.XX	TP 110				
005.0125.XX	CP 130				
005.0144.XX	CP 130-LS				
005.0525.XX	CP 155				
005.0544.XX	CP 155-LS				
005.0886.XX	CS 77				
005.0897.XX	CS 77-HV				
005.1412.XX	CS 77-BP				
005.1414.XX	CS 77-FP				
005.1425.XX	Eco system				
005.1451.XX	CS 86-HI				
	Eco system-AP				
CS 68-HV	CF 77				
005.1506.XX	CS 104				
	CS 77-SP				
CS 68-FP					
005.0925.XX					
005.0954.XX					

050.5153.-- = Corner Cleat screw
068.5920.-- = Corner Cleat drive pin
H=70 B=70 D=17.4

D0082129

G

068.7794.00

PERSHOEKEN 41.3x21 - 31.3x6.9
EQUERRES A SERTIR 41.3x21 - 31.3x6.9
CRIMP CORNER CLEATS 41.3x21 - 31.3x6.9
PRESSECKWINKEL 41.3x21 - 31.3x6.9

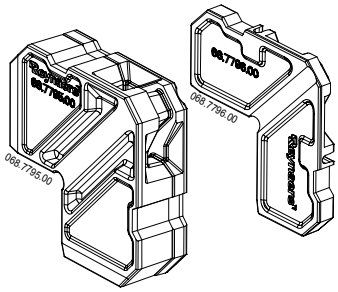

CS 68
005.1869.XX
005.1898.XX

CS 77
CS 77-FP
CS 86-HI
CS 77-SP

H=70/65
B=70/65
D=21/6.9

068.7797.00

PERSHOEKEN 50.2x21 - 40.3x6.9
EQUERRES A SERTIR 50.2x21 - 40.3x6.9
CRIMP CORNER CLEATS 50.2x21 - 40.3x6.9
PRESSECKWINKEL 50.2x21 - 40.3x6.9

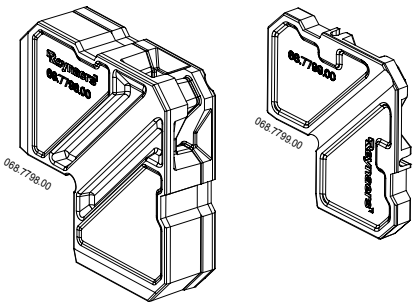

CS 68
005.0569.XX
005.0598.XX
005.1016.XX
005.3014.XX
005.3026.XX

CS 77
CS 77-FP
CS 86-HI
CS 77-SP

H=80/65
B=80/65
D=21/6.9

D0082139

CS 68-FP

EW 30

PERSHOEK/SCHROEFHOEK/NAGELHOEK
EQUERRE A SERTIR/EQUERRE A VISSER/EQUERRE AVEC CHEVILLE
CRIMP CORNER CLEAT/SCREW CORN. CLEATS/ CORN. CLEAT W. DRIVE PIN
PRESSECKWINKEL/SCHRAUBECKWINKEL/ECKWINKEL MIT STIFT

Reynaers Aluminium

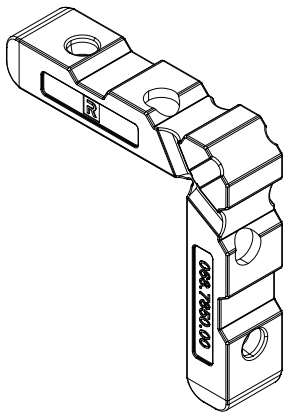

068.7850.00

HOEKVERBINDER 13.05x17.4
EQUERRE 13.05x17.4
CORNER CLEAT 13.05x17.4
ECKVERBINDER 13.05x17.4

2 st./pc
050.5153.--
-
4.8 x 13.8

2 st./pc
068.5920.--
REYNAERS
4 x 14

CS 68	005.0538.XX	CS 77-HV
005.0113.XX	005.1505.XX	CW 60-DRL
005.0136.XX	005.1513.XX	Eco system
005.0139.XX	005.1536.XX	CS 86-HI
005.0141.XX		Eco system-AP
005.0197.XX	CS 68-FP	Eco system 75
005.0438.XX	005.0739.XX	CF 77
005.0446.XX		
005.0447.XX	CS 59	
005.0826.XX	CS 59-HV	
005.0896.XX	TP 110	
005.1001.XX	CP 130	
005.1402.XX	CP 130-LS	
005.1413.XX	CP 155	
005.1426.XX	CP 155-LS	
005.1436.XX	CW 50	
005.1442.XX	CW 50-HI	
005.1541.XX	CW 60	
	CR 120	
CS 68-HV	CS 77	

050.5153.-- = Corner Cleat screw
068.5920.-- = Corner Cleat drive pin
H=70 B=70 D=17.4

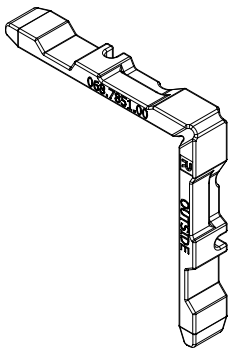

068.7851.00

HOEKVERBINDER 5.05x10.45
EQUERRE 5.05x10.45
CORNER CLEAT 5.05x10.45
ECKVERBINDER 5.05x10.45

2 st./pc
068.5938.--
-
Ø4 x 60

CS 68	005.1536.XX	CS 86-HI
005.0113.XX		Eco system-AP
005.0136.XX	CS 68-FP	CW 60-HL
005.0139.XX	005.0739.XX	CW 65-EF
005.0141.XX		CF 77
005.0197.XX	CS 59	
005.0446.XX	CS 59-HV	CW 86
005.0447.XX	TP 110	CW 60-SC
005.0826.XX	CP 130	CW 60-HI
005.0896.XX	CP 130-LS	
005.1402.XX	CP 155	
005.1413.XX	CP 155-LS	
005.1426.XX	CW 50	
005.1436.XX	CW 50-HI	
005.1442.XX	CW 50-HL	
	CW 60	
CS 68-HV	CS 77	
005.0538.XX	CS 77-HV	
005.1505.XX	CW 60-DRL	
005.1513.XX	Eco system	

068.5938.-- = Corner Cleat drive pin
H=60 B=60 D=10.45

D0082144

G

068.7855.00

HOEKVERBINDER 31x10.45
EQUERRE 31x10.45
CORNER CLEAT 31x10.45
ECKVERBINDER 31x10.45

2 st./pc
068.5938.--
-
Ø4 x 60

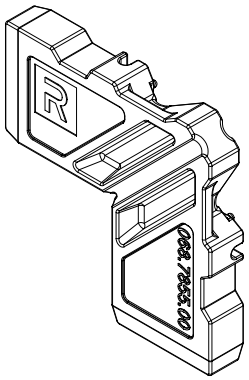

CS 68	CS 59
005.0114.XX	TP 110
005.0125.XX	CP 130
005.0144.XX	CP 130-LS
005.0525.XX	CP 155
005.0544.XX	CP 155-LS
005.0886.XX	CS 77
005.0897.XX	CS 77-HV
005.1412.XX	CS 77-BP
005.1414.XX	CS 77-FP
005.1425.XX	CS 86-HI
005.1451.XX	Eco system-AP
	CF 77
CS 68-HV	CS 104
005.1506.XX	CS 77-SP
CS 68-FP	Eco system
005.0925.XX	
005.0954.XX	

068.5938.-- = Corner Cleat drive pin
H=65 B=65 D=10.45

068.7856.00

HOEKVERBINDER 52x17.4
EQUERRE 52x17.4
CORNER CLEAT 52x17.4
ECKVERBINDER 52x17.4

2 st./pc
050.5153.--
-
4.8 x 13.8

2 st./pc
068.5920.--
REYNAERS
4 x 14

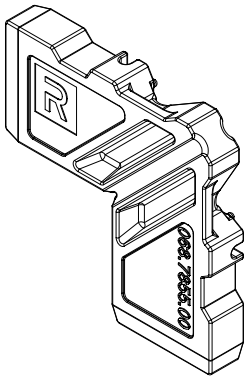

CS 68	CS 86-HI
005.0123.XX	Eco system-AP
005.0140.XX	CF 77
005.0894.XX	
005.1421.XX	
005.1423.XX	
005.1440.XX	
005.1444.XX	
CS 68-FP	
005.0723.XX	
CS 59	
TP 110	
CP 130	
CP 130-LS	
CP 155	
CP 155-LS	
CS 77	
Eco system	

050.5153.-- = Corner Cleat screw
068.5920.-- = Corner Cleat drive pin
H=90 B=90 D=17.4

D0082155

CS 68-FP
EW 30

PERSHOEKEN
EQUERRES A SERTIR
CRIMP CORNER CLEATS
PRESSECKWINKEL

Reynaers Aluminium

068.7857.00

HOEKVERBINDER 44x10.45
EQUERRE 44x10.45
CORNER CLEAT 44x10.45
ECKVERBINDER 44x10.45

2 st./pc
068.5938.--
-
Ø4 x 60

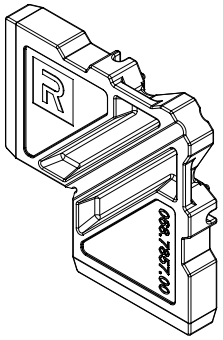

CS 68 005.0123.XX 005.0140.XX 005.0894.XX 005.1421.XX 005.1423.XX 005.1440.XX 005.1444.XX CS 68-FP 005.0723.XX CS 59 TP 110 CP 130 CP 130-LS CP 155 CP 155-LS CS 77 CS 86-HI	CF 77

068.5938.-- = Corner Cleat drive pin
H=70 B=70 D=10.45

068.7860.00

HOEKVERBINDER 30.3x26.4
EQUERRE 30.3x26.4
CORNER CLEAT 30.3x26.4
ECKVERBINDER 30.3x26.4

2 st./pc
050.5153.--
-
4.8 x 13.8

2 st./pc
068.5920.--
REYNAERS
4 x 14

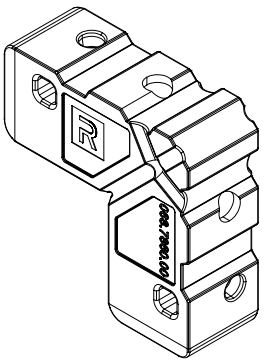

CS 68 005.0192.XX CS 68-Re 005.0292.XX CS 68-So 005.0203.XX CS 59 CS 59-Re CS 59-So CS 77 CS 77-BP Eco system CS 86-HI Eco system-AP CS 77-Re

050.5153.-- = Corner Cleat screw
068.5920.-- = Corner Cleat drive pin
H=70 B=70 D=26.4

D0082162

G

068.7859.00

HOEKVERBINDER 4.95x6.15
EQUERRE 4.95x6.15
CORNER CLEAT 4.95x6.15
ECKVERBINDER 4.95x6.15

2 st./pc
068.5938.--

-
Ø4 x 60

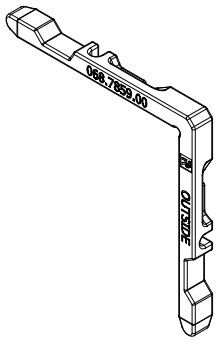

CS 68 005.0102.XX 005.0105.XX 005.1001.XX CS 68-HV 005.2499.XX 005.2502.XX 005.2503.XX 005.2504.XX CS 68-Re 005.0202.XX CS 68-So 005.0251.XX CS 59 CS 59-HV CS 59-Re	CS 59-So CS 77 CS 77-HV CS 68 Optima Eco system CS 86-HI CS 77-Re CS 68 Optima-AP				

068.5938.-- = Corner Cleat drive pin
H=59.52 B=59.52 D=6.15

068.7861.00

HOEKVERBINDER 18.05x10.45
EQUERRE 18.05x10.45
CORNER CLEAT 18.05x10.45
ECKVERBINDER 18.05x10.45

2 st./pc
068.5938.--

-
Ø4 x 60

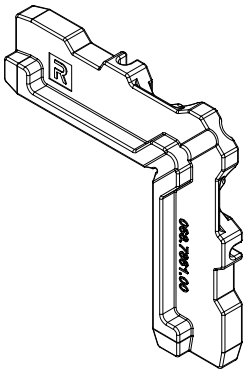

CS 68 005.0192.XX CS 68-Re 005.0292.XX CS 68-So 005.0203.XX CS 59 CS 59-Re CS 59-So CS 77 CS 77-BP CS 68 Optima CS 86-HI CS 77-Re CS 104					

068.5938.-- = Corner Cleat drive pin
H=65 B=65 D=10.45

D0082170

068.7952.00

HOEKVERBINDER 26.05x17.4
EQUERRE 26.05x17.4
CORNER CLEAT 26.05x17.4
ECKVERBINDER 26.05x17.4

2 st./pc
050.5153.--
-
4.8 x 13.8

2 st./pc
068.5920.--
REYNAERS
4 x 14

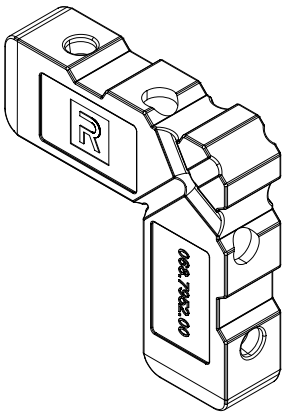

CS 68		CP 130-LS
005.0111.XX	005.1483.XX	CP 155
005.0120.XX	005.1492.XX	CP 155-LS
005.0142.XX	005.2439.XX	CS 77
005.0183.XX	0OS.4749.XX	CW 86
005.0258.XX	0OS.4750.XX	CS 77-HV
005.0420.XX	0OS.4853.XX	Eco system
005.0448.XX	CS 68-HV	CS 86-HI
005.0452.XX	005.1583.XX	CS 77-Re
005.0540.XX		CF 77
005.0893.XX	CS 68-FP	CS 104
005.1100.XX	005.0709.XX	
005.1109.XX	005.0719.XX	
005.1110.XX	005.0747.XX	
005.1401.XX	005.0783.XX	
005.1416.XX		
005.1443.XX	CS 59	
005.1449.XX	CS 59-AD	
005.1455.XX	TP 110	
005.1456.XX	CP 130	

050.5153.-- = Corner Cleat screw
068.5920.-- = Corner Cleat drive pin
H=70 B=70 D=17.4

068.7958.00

HOEKVERBINDER 13.2/17.35x26.4
EQUERRE 13.2/17.35x26.4
CORNER CLEAT 13.2/17.35x26.4
ECKVERBINDER 13.2/17.35x26.4

2 st./pc
050.5153.--
-
4.8 x 13.8

2 st./pc
068.5920.--
REYNAERS
4 x 14

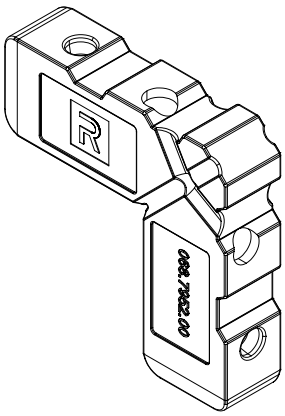

CS 68	CS 77
005.0102.XX	CS 77-HV
005.0105.XX	Eco system
	CS 86-HI
CS 68-HV	Eco system-AP
005.2499.XX	CS 77-Re
005.2502.XX	
005.2503.XX	
005.2504.XX	
CS 68-Re	
005.0202.XX	
CS 68-So	
005.0251.XX	
CS 59	
CS 59-HV	
CS 59-Re	
CS 59-So	

050.5153.-- = Corner Cleat screw
068.5920.-- = Corner Cleat drive pin
H=70 B=70 D=26.4

D0082171

PERSHOEKEN
EQ. A SERTIR
CRIMP CORNER
PRESSECKW.

Reynaers Aluminium

068.8090.00

PERSHOEK 37.8X6.5MM
EQUERRE A SERTIR 37.8X6.5MM
CRIMP CORNER CLEAT 37.8X6.5MM
PRESSECKWINKEL 37.8X6.5MM

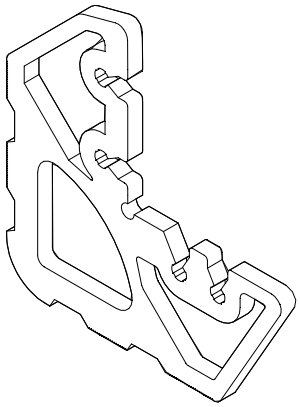

CS 68
005.0438.XX
005.1541.XX

H=37.8
B=37.8
D=6.5

068.8091.00

PERSHOEK 48.5X6.5MM
EQUERRE A SERTIR 48.5X6.5MM
CRIMP CORNER CLEAT 48.5X6.5MM
PRESSECKWINKEL 48.5X6.5MM

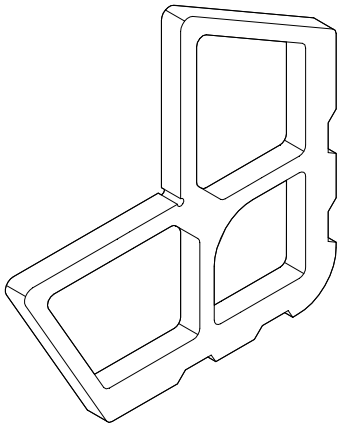

CS 68
005.2439.XX

H=48.5
B=48.5
D=6.5

D0082175

SCHROEFHOEKEN
EQUERRES A VISSER
SCREW CORNER CLEATS
SCHRAUBECKWINKEL

Reynaers Aluminium

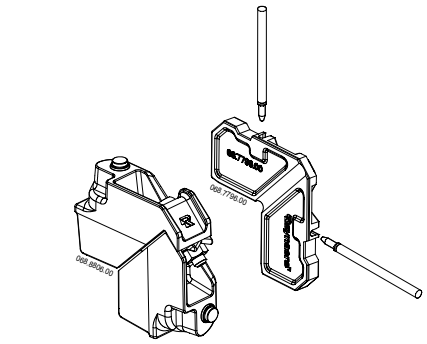

H=65
B=65
D=21/6.9

068.8805.00

SCHROEFHOEKEN 41.3x21 - 31.3x6.9
EQUERRES A VISSER 41.3x21 - 31.3x6.9
SCREW CORNER CLEATS 41.3x21 - 31.3x6.9
SCHRAUBECKWINKEL 41.3x21 - 31.3x6.9

CS 68
005.1869.XX
005.1898.XX

CS 77
CS 77-FP
CS 86-HI
CS 77-SP

2 st./pc
068.5938.--
-
Ø4 x 60

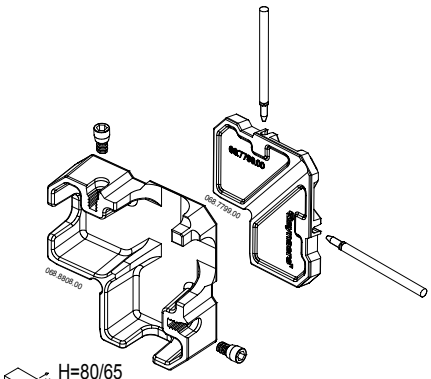

H=80/65
B=80/65
D=24/6.9

068.8807.00

SCHROEFHOEKEN MET GAT 50.2x24 - 40.3x6.9
EQ. A VISSER AVEC FORAGE 50.2x24 - 40.3x6.9
SCREW CORN. W. HOLE 50.2x24 - 40.3x6.9
SCHR.ECKW. M BOHR. 50.2x24 - 40.3x6.9

CS 68
005.0569.XX
005.0598.XX
005.1016.XX
005.3014.XX
005.3026.XX

CS 77
CS 77-FP
CS 86-HI
CS 77-SP

2 st./pc
068.5938.--
-
Ø4 x 60

2 st./pc
050.5153.--
-
4.8 x 13.8

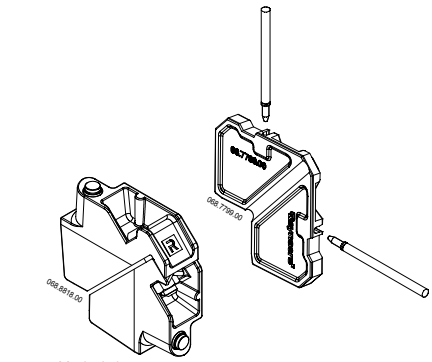

H=65/70
B=65/70
D=21/6.9

068.8817.00

SCHROEFHOEK 50.3x21 - 40.3x6.9
EQUERRE A VISSER 50.3x21 - 40.3x6.9
SCREW CORNER CLEAT 50.3x21 - 40.3x6.9
SCHRAUBECKWINKEL 50.3x21 - 40.3x6.9

CS 68
005.0569.XX
005.0598.XX
005.1016.XX
005.3014.XX
005.3026.XX

CS 77
CS 77-FP
CS 86-HI
CS 77-SP

2 st./pc
068.5938.--
-
Ø4 x 60

D0082179

SCHROEFHOEKEN
EQUERRES A VISSER
SCREW CORNER CLEATS
SCHRAUBECKWINKEL

Reynaers Aluminium

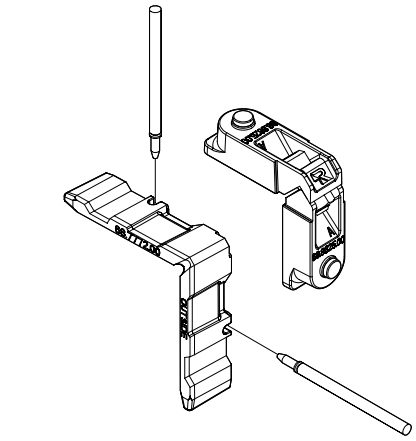

H=60/50.5
B=60/50.5
D=19.3/16.7

068.8838.00

SCHROEFHOEKEN 5.1x19.3 - 12.8x16.7
EQUERRES A VISSER 5.1x19.3 - 12.8x16.7
SCREW CORNER CLEATS 5.1x19.3 - 12.8x16.7
SCHRAUBECKWINKEL 5.1x19.3 - 12.8x16.7

CS 68-Re
005.1213.XX
005.1236.XX

CS 68-So
005.1249.XX
005.1270.XX

CS 59-Re
CS 59-So
CS 77-Re

2 st./pc
068.5938.--
-
Ø4 x 60

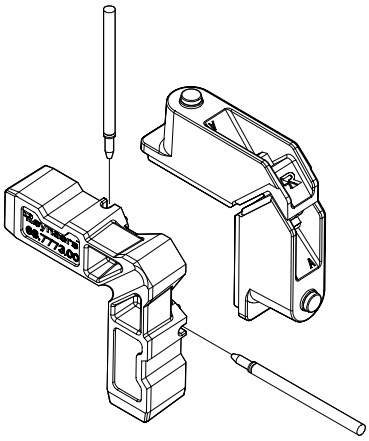

H=65/70.5
B=65/70.5
D=19.3/16.7

068.8839.00

SCHROEFHOEKEN 17.8x19.3 - 23.3/25.8x16.7
EQ. A VISSER 17.8x19.3 - 23.3/25.8x16.7
SCREW CORNER 17.8x19.3 - 23.3/25.8x16.7
SCHRAUBECKW. 17.8x19.3 - 23.3/25.8x16.7

CS 68-Re
005.1216.XX
005.1220.XX

CS 68-So
005.1250.XX
005.1271.XX

CS 59-Re
CS 59-So
CS 77-Re

2 st./pc
068.5938.--
-
Ø4 x 60

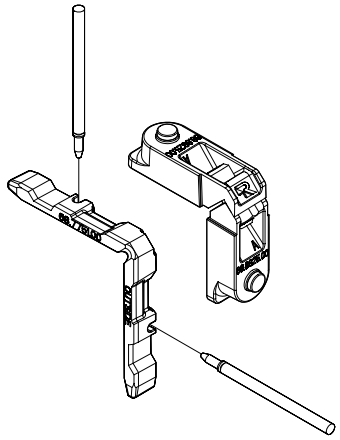

H=60/50.5
B=60/50.5
D=10.3/16.7

068.8840.00

SCHROEFHOEKEN 5.1x10.3 - 12.8x16.7
EQUERRES A VISSER 5.1x10.3 - 12.8x16.7
SCREW CORNER CLEATS 5.1x10.3 - 12.8x16.7
SCHRAUBECKWINKEL 5.1x10.3 - 12.8x16.7

CS 68
005.0113.XX
005.0136.XX
005.0139.XX
005.0141.XX
005.0197.XX
005.0446.XX
005.0447.XX
005.0826.XX
005.0896.XX
005.1402.XX
005.1413.XX
005.1426.XX
005.1436.XX
005.1442.XX

CS 68-HV
005.0538.XX
005.1505.XX
005.1513.XX
005.1536.XX

CS 68-FP
005.0739.XX

CS 59
CS 59-HV
TP 110
CP 130
CP 130-LS
CP 155
CP 155-LS
CW 50
CW 50-HI
CW 60
CS 77
CS 77-HV
CW 60-DRL
Eco system
CS 86-HI
Eco system-AP
CF 77

2 st./pc
068.5938.--
-
Ø4 x 60

D0082185

SCHROEFHOEKEN
EQUERRES A VISSER
SCREW CORNER CLEATS
SCHRAUBECKWINKEL

Reynaers Aluminium

068.8841.00

SCHROEFHOEKEN 17.8x10.3 - 23.3/25.8x16.7
EQ. A VISSER 17.8x10.3 - 23.3/25.8x16.7
SCREW CORNER 17.8x10.3 - 23.3/25.8x16.7
SCHRAUBECKW. 17.8x10.3 - 23.3/25.8x16.7

2 st./pc
068.5938.--
-
Ø4 x 60

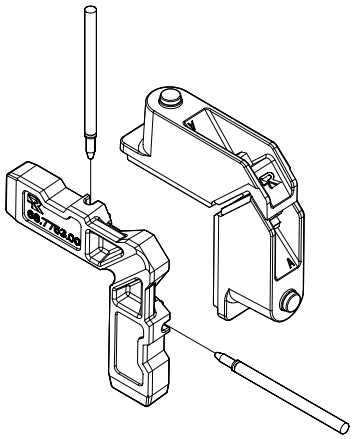

H=65/70.5
B=65/70.5
D=10.3/16.7

CS 68		CS 77-Re
005.0111.XX	CS 68-HV	CF 77
005.0120.XX	005.1583.XX	CS 104
005.0142.XX		
005.0183.XX	CS 68-FP	
005.0258.XX	005.0709.XX	
005.0420.XX	005.0719.XX	
005.0448.XX	005.0747.XX	
005.0452.XX	005.0783.XX	
005.0893.XX		
005.1100.XX	CS 59	
005.1109.XX	CS 59-AD	
005.1110.XX	TP 110	
005.1416.XX	CP 130	
005.1443.XX	CP 130-LS	
005.1449.XX	CP 155	
005.1455.XX	CP 155-LS	
005.1456.XX	CS 77	
005.1483.XX	CS 77-HV	
005.1492.XX	CS 86-HI	

068.8842.00

SCHROEFHOEKEN 30.8x10.3 - 38.8x16.7
EQ. A VISSER 30.8x10.3 - 38.8x16.7
SCREW CORNER 30.8x10.3 - 38.8x16.7
SCHRAUBECKW. 30.8x10.3 - 38.8x16.7

2 st./pc
068.5938.--
-
Ø4 x 60

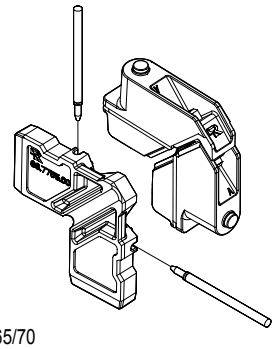

H=65/70
B=65/70
D=10.3/16.7

CS 68	CS 68-FP
005.0114.XX	005.0925.XX
005.0125.XX	005.0954.XX
005.0144.XX	
005.0525.XX	CS 59
005.0544.XX	TP 110
005.0886.XX	CP 130
005.0897.XX	CP 130-LS
005.1412.XX	CP 155
005.1414.XX	CP 155-LS
005.1425.XX	CS 77
005.1451.XX	CS 77-HV
	CS 77-BP
CS 68-HV	CS 77-FP
005.1506.XX	CS 86-HI
	CF 77

068.8843.00

SCHROEFHOEKEN 43.8x10.3 - 51.8x16.7
EQ. A VISSER 43.8x10.3 - 51.8x16.7
SCREW CORNER 43.8x10.3 - 51.8x16.7
SCHRAUBECKW. 43.8x10.3 - 51.8x16.7

2 st./pc
068.5938.--
-
Ø4 x 60

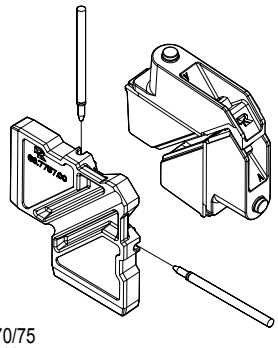

H=70/75
B=70/75
D=10.3/16.7

CS 68	CP 155
005.0123.XX	CP 155-LS
005.0140.XX	CS 77
005.0894.XX	CS 86-HI
005.1421.XX	CF 77
005.1423.XX	
005.1440.XX	
005.1444.XX	
CS 68-FP	
005.0723.XX	
CS 59	
TP 110	
CP 130	
CP 130-LS	

D0082186

G

068.8844.00

SCHROEFHOEKEN 5.1x6 - 12.8/17.3x26
EQUERRES A VISSER 5.1x6 - 12.8/17.3x26
SCREW CORNER CLEATS 5.1x6 - 12.8/17.3x26
SCHRAUBECKWINKEL 5.1x6 - 12.8/17.3x26

2 st./pc
068.5938.--
-
Ø4 x 60

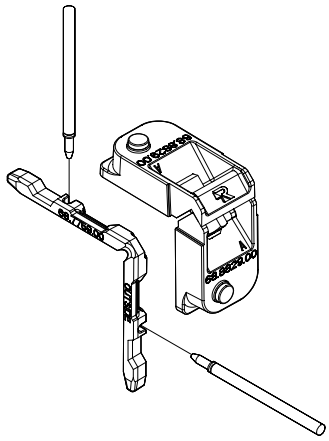

H=60/55
B=60/55
D=6/26

CS 68 005.0102.XX 005.0105.XX CS 68-HV 005.2499.XX 005.2502.XX 005.2503.XX 005.2504.XX CS 68-Re 005.0202.XX CS 68-So 005.0251.XX CS 59 CS 59-HV CS 59-Re CS 59-So	CS 77 CS 77-HV CS 86-HI CS 77-Re				

068.8845.00

SCHROEFHOEKEN 8.3/17.8x10.3 - 25.8/30.3x26
EQ. A VISSER 8.3/17.8x10.3 - 25.8/30.3x26
SCREW CORNER 8.3/17.8x10.3 - 25.8/30.3x26
SCHRAUBECKW. 8.3/17.8x10.3 - 25.8/30.3x26

2 st./pc
068.5938.--
-
Ø4 x 60

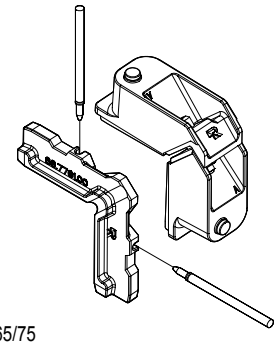

H=65/75
B=65/75
D=10.3/26

CS 68 005.0192.XX CS 68-Re 005.0292.XX CS 68-So 005.0203.XX CS 59 CS 59-Re CS 59-So CS 77 CS 77-BP CS 86-HI CS 77-Re					

068.8846.00

SCHROEFHOEKEN 21.3/30.8x10.3 - 38.3/43.3x26
EQ. A VISSER 21.3/30.8x10.3 - 38.3/43.3x26
SCREW CORNER 21.3/30.8x10.3 - 38.3/43.3x26
SCHRAUBECKW. 21.3/30.8x10.3 - 38.3/43.3x26

2 st./pc
068.5938.--
-
Ø4 x 60

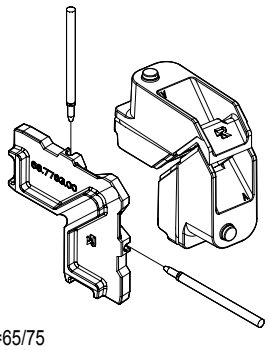

H=65/75
B=65/75
D=10.3/26

CS 68 005.0112.XX CS 59 CS 77 CS 86-HI					

D0082194

SCHROEFHOEKEN
EQUERRES A VISSER
SCREW CORNER CLEATS
SCHRAUBECKWINKEL

Reynaers Aluminium

068.8847.00

SCHROEFHOEKEN 34.3/43.8x10.3 - 51.8/56.3x26
EQ. A VISSER 34.3/43.8x10.3 - 51.8/56.3x26
SCREW CORNER 34.3/43.8x10.3 - 51.8/56.3x26
SCHRAUBECKW. 34.3/43.8x10.3 - 51.8/56.3x26

2 st./pc
068.5938.--
-
Ø4 x 60

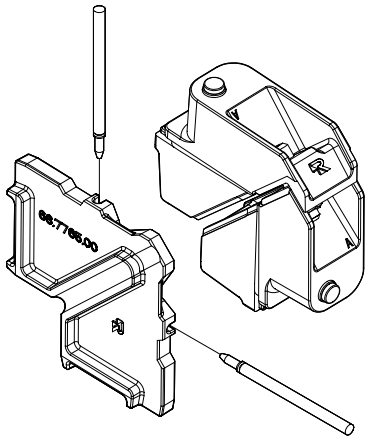

CS 68
005.0121.XX
005.1521.XX

CS 68-Re
005.0221.XX

CS 68-So
005.0252.XX

CS 59
CS 59-Re
CS 59-So
CS 77
CS 86-HI
CS 77-Re

H=70/80
B=70/80
D=10.3/26

068.8871.00

SCHROEFHOEKEN 43.8x10.3 - 38.8x16.7
EQUERRES A VISSER 43.8x10.3 - 38.8x16.7
SCREW CORNER CLEATS 43.8x10.3 - 38.8x16.7
SCHRAUBECKWINKEL 43.8x10.3 - 38.8x16.7

2 st./pc
068.5938.--
-
Ø4 x 60

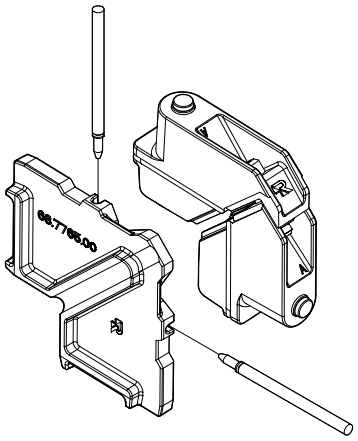

CS 68
005.0052.XX

CS 68-Re
005.0152.XX

CS 59
CS 77
CS 77-Re

H=70/75
B=70/75
D=10.3/16.7

D0082200

G

CS 68-FP
EW 30

SCHROEFHOEK VERSTELBAAR
EQUERRE A VISSER REGLABLE
SCREW CORNER CLEAT ADJUSTABLE
SCHRAUBECKWINKEL VERSTELLBAR

Reynaers Aluminium

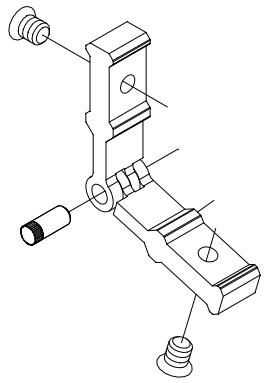

068.8905.00

SCHROEFHOEK VERSTELBAAR
EQUERRE A VISSER REGLABLE
SCREW CORNER CLEAT ADJUSTABLE
SCHRAUBECKWINKEL VERSTELLBAR

2 st./pc
050.5091.--
-
M8 x 10

CS 68	005.1513.XX
005.0111.XX	005.1536.XX
005.0113.XX	005.1583.XX
005.0114.XX	
005.0120.XX	CS 68-Re
005.0123.XX	005.1213.XX
005.0125.XX	005.1216.XX
005.0136.XX	005.1220.XX
005.0139.XX	005.1236.XX
005.0140.XX	
005.0141.XX	CS 68-So
005.0142.XX	005.0203.XX
005.0183.XX	005.1249.XX
005.0197.XX	005.1250.XX
005.0258.XX	005.1270.XX
005.0420.XX	005.1271.XX
005.0446.XX	
005.0447.XX	CS 68-FP
005.0448.XX	005.0709.XX
005.0452.XX	005.0719.XX
005.0525.XX	005.0739.XX
005.0540.XX	005.0747.XX
005.0544.XX	005.0783.XX
005.0826.XX	005.0925.XX
005.0893.XX	005.0954.XX
005.0894.XX	
005.0896.XX	CS 59
005.0897.XX	CS 59-Re
005.1100.XX	CS 59-So
005.1109.XX	TP 110
005.1110.XX	CP 130
005.1402.XX	CP 130-LS
005.1412.XX	CP 155
005.1413.XX	CP 155-LS
005.1414.XX	CW 50
005.1416.XX	CW 60
005.1421.XX	CS 77
005.1423.XX	CS 77-HV
005.1425.XX	CS 77-BP
005.1426.XX	CS 77-FP
005.1436.XX	Eco system
005.1440.XX	CS 86-HI
005.1442.XX	Eco system-AP
005.1443.XX	CS 77-Re
005.1444.XX	CF 77
005.1449.XX	CS 104
005.1451.XX	CS 77-SP
005.1455.XX	
005.1456.XX	
005.1483.XX	
005.1492.XX	
CS 68-HV	
005.1505.XX	
005.1506.XX	

H=65 B=65 D=17.3
USE WITH 068.8906.04

D0082204

G

VULHOEK
EQUERRE DE REMPLISSAGE
CORNER SUPPORT
FUELLECKWINKEL

Reynaers Aluminium

069.6565.04

VULHOEK 17x9.1MM
EQUERRE DE REMPLISSAGE 17x9.1MM
CORNER SUPPORT 17x9.1MM
FUELLECKWINKEL 17x9.1MM

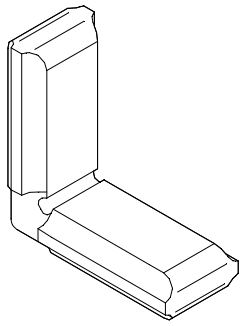

H=39.4
B=39.4
D=17

CS 68	005.2502.XX	CP 96-LS
005.0102.XX	005.2503.XX	CP 96-LS/AP
005.0113.XX	005.2504.XX	TP 110-Re
005.0136.XX		CS 38-SL
005.0139.XX	CS 68-Re	CS 38-SL/AP
005.0141.XX	005.0202.XX	
005.0197.XX	005.1213.XX	TLS 110
005.0446.XX	005.1236.XX	
005.0447.XX		
005.0896.XX	CS 68-So	
005.1402.XX	005.0251.XX	
005.1413.XX	005.1249.XX	
005.1436.XX	005.1270.XX	
005.1442.XX		
	CS 68-FP	
CS 68-HV	005.0739.XX	
005.1505.XX		
005.1513.XX	TP 110	
005.1536.XX	CP 130	
005.2499.XX	CP 130-LS	

069.6566.04

VULHOEK 19.4x22.1MM
EQUERRE DE REMPLISSAGE 19.4x22.1MM
CORNER SUPPORT 19.4x22.1MM
FUELLECKWINKEL 19.4x22.1MM

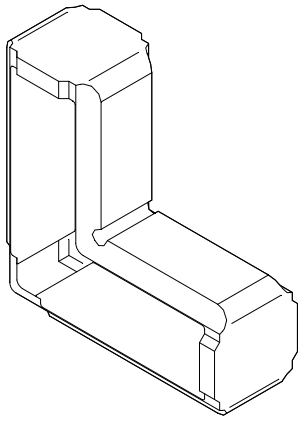

H=52.4
B=52.4
D=19.4

CS 68	005.1541.XX	
005.0111.XX	005.2439.XX	CS 59
005.0120.XX		CP 130
005.0183.XX	CS 68-HV	CP 130-LS
005.0192.XX	005.1583.XX	CS 77
005.0258.XX		CS 86-HI
005.0438.XX	CS 68-Re	
005.0448.XX	005.0292.XX	
005.0452.XX	005.1216.XX	
005.0893.XX	005.1220.XX	
005.1100.XX		
005.1109.XX	CS 68-So	
005.1110.XX	005.0203.XX	
005.1416.XX	005.1250.XX	
005.1443.XX	005.1271.XX	
005.1449.XX		
005.1455.XX	CS 68-FP	
005.1456.XX	005.0709.XX	
005.1483.XX	005.0719.XX	
005.1492.XX	005.0783.XX	

D0082208

VULHOEK
EQUERRE DE REMPLISSAGE
CORNER SUPPORT
FUELLECKWINKEL

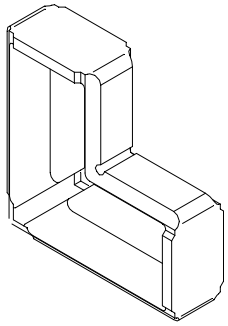 H=65.4 B=65.4 D=19.4	069.6567.04 VULHOEK 19.4x35.1MM EQUERRE DE REMPLISSAGE 19.4x35.1MM CORNER SUPPORT 19.4x35.1MM FUELLECKWINKEL 19.4x35.1MM	CS 68 005.0112.XX 005.0114.XX 005.0125.XX 005.0897.XX 005.1412.XX 005.1414.XX 005.1425.XX 005.1451.XX CS 68-HV 005.1506.XX CS 68-FP 005.0925.XX 005.0954.XX CP 130 CP 130-LS CS 77 CP 155	CP 155-LS
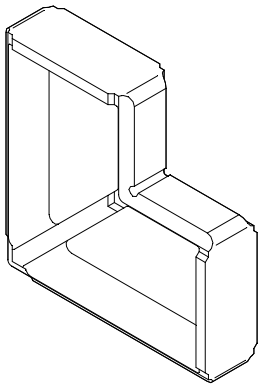 H=78.4 B=78.4 D=19.4	069.6568.04 VULHOEK 19.4x48.1MM EQUERRE DE REMPLISSAGE 19.4x48.1MM CORNER SUPPORT 19.4x48.1MM FUELLECKWINKEL 19.4x48.1MM	CS 68 005.0121.XX 005.0123.XX 005.0140.XX 005.0894.XX 005.1421.XX 005.1423.XX 005.1440.XX 005.1444.XX CS 68-Re 005.0221.XX CS 68-So 005.0252.XX CS 68-FP 005.0723.XX CP 130 CP 130-LS	
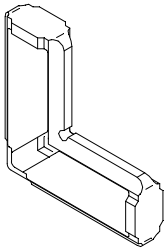 H=52.4 B=52.4 D=10.4	069.6571.04 VULHOEK 10.4x22.1MM EQUERRE DE REMPLISSAGE 10.4x22.1MM CORNER SUPPORT 10.4x22.1MM FUELLECKWINKEL 10.4x22.1MM	CS 68 005.0420.XX 005.0540.XX CS 59 CS 59-Re CS 59-So TP 110 CS 77	

D0082211

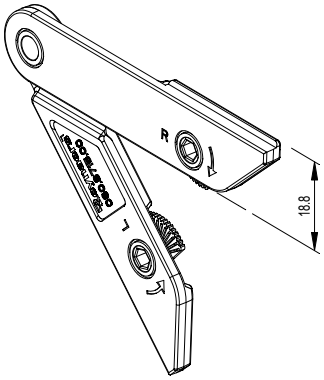

060.8715.00

STEUNHOEK VERSTELBAAR
CALE DE FEUILLURE REGLABLES
REBATE SUPPORT ADJUSTABLE
ECKWINKEL VERSTELLBAR

CS 68	005.0452.XX	0K5.0847.XX	005.0252.XX	CS 59-So
005.0102.XX	005.0525.XX	0K5.0850.XX	005.1249.XX	TP 110
005.0111.XX	005.0544.XX	0K5.0854.XX	005.1250.XX	CP 130
005.0112.XX	005.0817.XX		005.1270.XX	CP 130-LS
005.0113.XX	005.0824.XX	CS 68-HV	005.1271.XX	CP 155
005.0114.XX	005.0826.XX	005.1505.XX		CP 155-LS
005.0120.XX	005.0847.XX	005.1506.XX	CS 68-FP	CW 50
005.0125.XX	005.0850.XX	005.1513.XX	005.0709.XX	CW 60
005.0136.XX	005.0854.XX	005.1536.XX	005.0719.XX	CS 77
005.0139.XX	005.0859.XX	005.1583.XX	005.0739.XX	CS 77-HV
005.0140.XX	005.0860.XX		005.0747.XX	CS 77-BP
005.0141.XX	005.1100.XX	CS 68-Re	005.0783.XX	CS 77-FP
005.0155.XX	005.1109.XX	005.0202.XX	005.0916.XX	CS 86-HI
005.0183.XX	005.1110.XX	005.1213.XX	005.0925.XX	CS 77-Re
005.0197.XX	005.1449.XX	005.1216.XX	005.0954.XX	CF 77
005.0258.XX	005.1455.XX	005.1220.XX		CS 77-SP
005.0420.XX	005.1456.XX	005.1236.XX	CS 59Pa	
005.0446.XX	0K5.0155.XX		CS 59	
005.0447.XX	0K5.0817.XX	CS 68-So	CS 59-HV	
005.0448.XX	0K5.0824.XX	005.0251.XX	CS 59-Re	

H=18.8
B=86.8
D=4.7

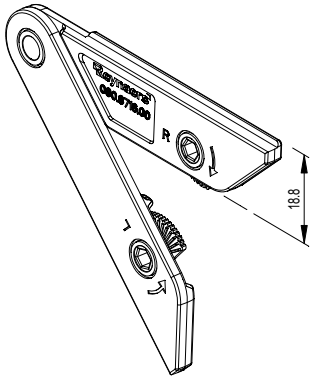

060.8716.00

STEUNHOEK VERSTELBAAR
CALE DE FEUILLURE REGLABLES
REBATE SUPPORT ADJUSTABLE
ECKWINKEL VERSTELLBAR

CS 68	005.0452.XX	0K5.0847.XX	005.0252.XX	CS 59-So
005.0102.XX	005.0525.XX	0K5.0850.XX	005.1249.XX	TP 110
005.0111.XX	005.0544.XX	0K5.0854.XX	005.1250.XX	CP 130
005.0112.XX	005.0817.XX		005.1270.XX	CP 130-LS
005.0113.XX	005.0824.XX	CS 68-HV	005.1271.XX	CP 155
005.0114.XX	005.0826.XX	005.1505.XX		CP 155-LS
005.0120.XX	005.0847.XX	005.1506.XX	CS 68-FP	CW 50
005.0125.XX	005.0850.XX	005.1513.XX	005.0709.XX	CW 60
005.0136.XX	005.0854.XX	005.1536.XX	005.0719.XX	CS 77
005.0139.XX	005.0859.XX	005.1583.XX	005.0739.XX	CS 77-HV
005.0140.XX	005.0860.XX		005.0747.XX	CS 77-BP
005.0141.XX	005.1100.XX	CS 68-Re	005.0783.XX	CS 77-FP
005.0155.XX	005.1109.XX	005.0202.XX	005.0916.XX	CS 86-HI
005.0183.XX	005.1110.XX	005.1213.XX	005.0925.XX	CS 77-Re
005.0197.XX	005.1449.XX	005.1216.XX	005.0954.XX	CF 77
005.0258.XX	005.1455.XX	005.1220.XX		CS 77-SP
005.0420.XX	005.1456.XX	005.1236.XX	CS 59Pa	
005.0446.XX	0K5.0155.XX		CS 59	
005.0447.XX	0K5.0817.XX	CS 68-So	CS 59-HV	
005.0448.XX	0K5.0824.XX	005.0251.XX	CS 59-Re	

H=18.8
B=86.8
D=4.7

D0082212

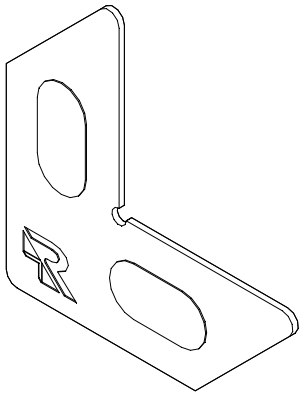

060.8723.--

STEUNHOEK 21x1
CALE DE FEUILLURE 21x1
REBATE SUPPORT 21x1
ECKWINKEL 21x1

CS 68	005.0192.XX	005.1449.XX	005.0292.XX	005.0726.XX	CP 130
005.0051.XX	005.0197.XX	005.1455.XX	005.1213.XX	005.0738.XX	CP 130-LS
005.0051.XX	005.0258.XX	005.1456.XX	005.1216.XX	005.0739.XX	CP 155
005.0052.XX	005.0420.XX	005.1521.XX	005.1220.XX	005.0747.XX	CP 155-LS
005.0102.XX	005.0446.XX	005.3014.XX	005.1236.XX	005.0783.XX	CW 50
005.0111.XX	005.0447.XX	005.3026.XX		005.0914.XX	CW 50-HI
005.0112.XX	005.0448.XX	030.0001.XX	CS 68-So	005.0916.XX	CW 60
005.0113.XX	005.0452.XX		005.0203.XX	005.0925.XX	CS 77
005.0114.XX	005.0525.XX	CS 68-HV	005.0251.XX	005.0926.XX	CS 77-HV
005.0120.XX	005.0544.XX	005.0538.XX	005.0252.XX	005.0954.XX	CS 77-BP
005.0121.XX	005.0813.XX	005.1505.XX	005.1249.XX		CS 77-FP
005.0123.XX	005.0814.XX	005.1506.XX	005.1250.XX	CS 59Pa	CP 96
005.0125.XX	005.0820.XX	005.1513.XX	005.1270.XX	CS 59	CW 60-DRL
005.0136.XX	005.0823.XX	005.1536.XX	005.1271.XX	CS 59-HV	CP 96-LS
005.0139.XX	005.0826.XX	005.1583.XX		CS 59-Re	CP 96-AP
005.0140.XX	005.0886.XX		CS 68-FP	CS 59-So	CP 96-LS/AP
005.0141.XX	005.1016.XX	CS 68-Re	005.0709.XX	CS 59-AD	TP 110-Re
005.0142.XX	005.1100.XX	005.0152.XX	005.0714.XX	CS 59-CD	CS 68 Optima
005.0144.XX	005.1109.XX	005.0202.XX	005.0719.XX	CS 59-SD	Eco system
005.0183.XX	005.1110.XX	005.0221.XX	005.0723.XX	TP 110	CS 38-SL

H=50
B=50
D=1

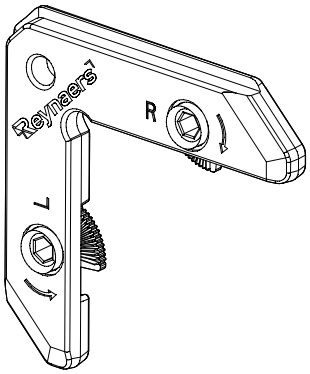

060.8724.00

STEUNHOEK
CALE DE FEUILLURE
REBATE SUPPORT
ECKWINKEL

CS 68	005.1541.XX				
005.0438.XX	005.2439.XX				
005.1401.XX	030.0001.XX				
005.1402.XX					
005.1412.XX	CS 59Pa				
005.1413.XX	CS 59				
005.1414.XX	CW 60				
005.1416.XX	MOSQUITO				
005.1421.XX	CS 77				
005.1423.XX	CS 77-BP				
005.1425.XX	CS 86-HI				
005.1426.XX	CD 50				
005.1436.XX	CD 50-SD				
005.1440.XX	CW 86-BR				
005.1442.XX					
005.1443.XX	CP 50				
005.1444.XX					
005.1451.XX					
005.1483.XX					
005.1492.XX					

H=50
B=50
D=4.5

D0082218

060.8746.00

STEUNHOEK 16.4x3.5
CALE DE FEUILLURE 16.4x3.5
REBATE SUPPORT 16.4x3.5
ECKWINKEL 16.4x3.5

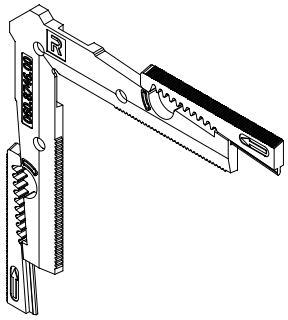

CS 68	0K5.0817.XX	CS 59-CD
005.0051.XX	0K5.0824.XX	CS 59-SD
005.0051.XX	0K5.0847.XX	TP 110
005.0052.XX	0K5.0850.XX	CP 130
005.0102.XX	0K5.0854.XX	CP 130-LS
005.0111.XX		CP 155
005.0112.XX	CS 68-HV	CP 155-LS
005.0113.XX	005.0538.XX	CW 50
005.0114.XX	005.1505.XX	CW 50-HI
005.0120.XX	005.1506.XX	CW 60
005.0121.XX	005.1513.XX	CS 77
005.0123.XX	005.1536.XX	CS 77-HV
005.0125.XX	005.1583.XX	CS 77-BP
005.0136.XX		CS 77-FP
005.0139.XX	CS 68-Re	CP 96
005.0140.XX	005.0152.XX	CW 60-DRL
005.0141.XX	005.0202.XX	CP 96-LS
005.0142.XX	005.0221.XX	TP 110-Re
005.0144.XX	005.0292.XX	CS 68 Optima
005.0155.XX	005.1213.XX	CS 86-HI
005.0183.XX	005.1216.XX	BS 40
005.0192.XX	005.1220.XX	CS 77-Re
005.0197.XX	005.1236.XX	CF 77
005.0258.XX		CS 104
005.0420.XX	CS 68-So	CS 77-SP
005.0446.XX	005.0203.XX	
005.0447.XX	005.0251.XX	CS 38-SL
005.0448.XX	005.0252.XX	CS 38-SL/AP
005.0452.XX	005.1249.XX	CS 68 Optima-AP
005.0525.XX	005.1250.XX	
005.0544.XX	005.1270.XX	
005.0813.XX	005.1271.XX	
005.0814.XX		
005.0817.XX	CS 68-FP	
005.0820.XX	005.0709.XX	
005.0823.XX	005.0714.XX	
005.0824.XX	005.0719.XX	
005.0826.XX	005.0723.XX	
005.0847.XX	005.0726.XX	
005.0850.XX	005.0738.XX	
005.0854.XX	005.0739.XX	
005.0886.XX	005.0747.XX	
005.1016.XX	005.0783.XX	
005.1100.XX	005.0914.XX	
005.1109.XX	005.0916.XX	
005.1110.XX	005.0925.XX	
005.1449.XX	005.0926.XX	
005.1455.XX	005.0954.XX	
005.1456.XX		
005.1521.XX	CS 59Pa	
005.1541.XX	CS 59	
005.3014.XX	CS 59-HV	
005.3026.XX	CS 59-Re	
030.0001.XX	CS 59-So	
0K5.0155.XX	CS 59-AD	

H=100.9
B=100.9
D=3.5

D0082229

G

068.8730.00

T-VERBINDER 5x14MM
JONCTION-T 5x14MM
T-BRACKET 5x14MM
T-VERBINDER 5x14MM

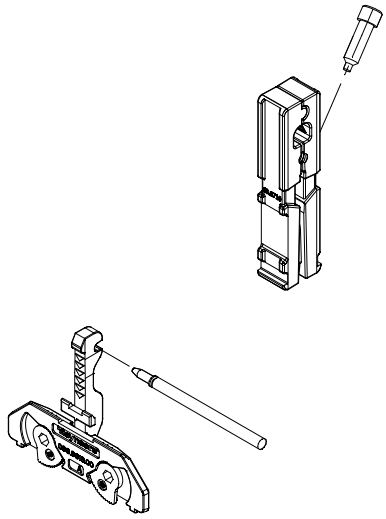

CS 68	005.1536.XX	CP 155
005.0113.XX		CP 155-LS
005.0136.XX	CS 68-Re	CW 50
005.0139.XX	005.1213.XX	CW 50-HI
005.0141.XX	005.1236.XX	CW 60
005.0197.XX		CS 77
005.0446.XX	CS 68-So	CS 77-HV
005.0447.XX	005.1249.XX	CW 60-DRL
005.0826.XX	005.1270.XX	CS 86-HI
005.0859.XX		CS 77-Re
005.0896.XX	CS 68-FP	CF 77
005.1413.XX	005.0739.XX	
005.1426.XX		CS 59-AD
005.1436.XX	CS 59	CS 59-CD
005.1442.XX	CS 59-HV	CS 59-SD
	CS 59-Re	CS 59-AP
CS 68-HV	CS 59-So	CS 68-AP
005.0538.XX	TP 110	CS 77-AP
005.1505.XX	CP 130	CS 77-BP
005.1513.XX	CP 130-LS	

1 st./pc
068.5938.--
-
Ø4 x 60

1 st./pc
050.5153.--
-
4.8 x 13.8

1 st./pc
068.5920.--
REYNAERS
4 x 14

050.5153.-- = T-connection screw
068.5920.-- = T-connection drive pin
H=55.8/73.3 - B=64/12.5 - D=10.2/17.4

068.8731.00

T-VERBINDER 17.7x25.8MM
JONCTION-T 17.7x25.8MM
T-BRACKET 17.7x25.8MM
T-VERBINDER 17.7x25.8MM

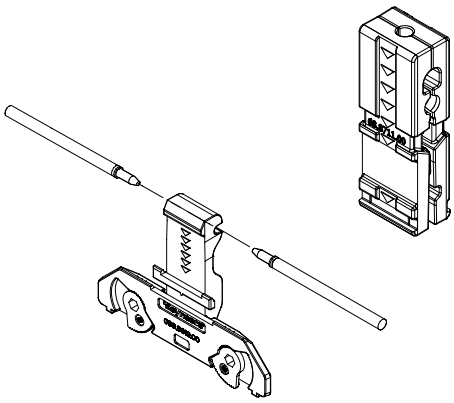

CS 68	005.1483.XX	CS 59
005.0004.XX	0K5.0004.XX	CS 59-Re
005.0111.XX	0OS.4854.XX	CS 59-So
005.0120.XX		TP 110
005.0183.XX	CS 68-HV	CP 130
005.0258.XX	005.1583.XX	CP 130-LS
005.0420.XX		CP 155
005.0448.XX	CS 68-Re	CP 155-LS
005.0452.XX	005.1216.XX	CS 77
005.0540.XX	005.1220.XX	CS 77-HV
005.0860.XX		CS 86-HI
005.0893.XX	CS 68-So	CS 77-Re
005.1100.XX	005.1250.XX	CF 77
005.1109.XX	005.1271.XX	CS 104
005.1110.XX		
005.1416.XX	CS 68-FP	
005.1443.XX	005.0709.XX	
005.1449.XX	005.0719.XX	
005.1455.XX	005.0783.XX	
005.1456.XX		

2 st./pc
068.5938.--
-
Ø4 x 60

2 st./pc
050.5153.--
-
4.8 x 13.8

2 st./pc
068.5920.--
REYNAERS
4 x 14

050.5153.-- = T-connection screw
068.5920.-- = T-connection drive pin
H=55.8/73.3 - B=79/25.8 - D=10.2/17.4

D0082234

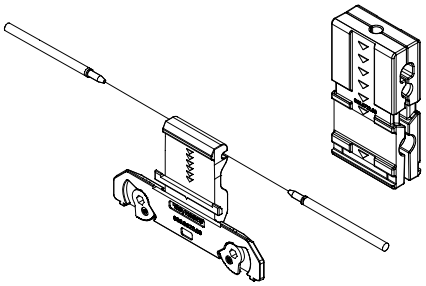

068.8732.00

T-VERBINDER 30.9x38.8MM
JONCTION-T 30.9x38.8MM
T-BRACKET 30.9x38.8MM
T-VERBINDER 30.9x38.8MM

2 st./pc
068.5938.--
-
Ø4 x 60

2 st./pc
050.5153.--
-
4.8 x 13.8

2 st./pc
068.5920.--
REYNAERS
4 x 14

CS 68	TP 110	CS 68-Re			
005.0114.XX	CP 130	CS 68-So			
005.0125.XX	CP 130-LS	CS 59-AP			
005.0144.XX	CP 155	CS 68-AP			
005.0525.XX	CP 155-LS	CS 77-AP			
005.0544.XX	CS 77				
005.0886.XX	CS 77-HV				
005.0897.XX	CS 77-BP				
005.1414.XX	CS 77-FP				
005.1425.XX	CS 86-HI				
005.1451.XX	CF 77				
	CS 104				
CS 68-HV	CS 77-SP				
005.1506.XX					
	CS 59-HV				
CS 68-FP	CS 59-Re				
005.0925.XX	CS 59-So				
005.0954.XX	CS 59-AD				
	CS 59-CD				
CS 59	CS 59-SD				

050.5153.-- = T-connection screw
068.5920.-- = T-connection drive pin
H=55.8/73.3 - B=92/38.8 - D=10.2/17.4

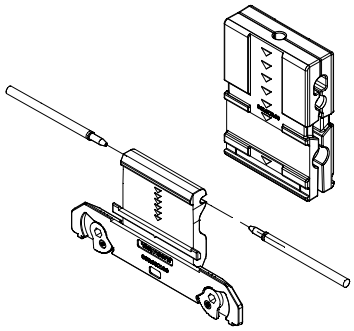

068.8733.00

T-VERBINDER 43.9x38.8MM
JONCTION-T 43.9x38.8MM
T-BRACKET 43.9x38.8MM
T-VERBINDER 43.9x38.8MM

2 st./pc
068.5938.--
-
Ø4 x 60

2 st./pc
050.5153.--
-
4.8 x 13.8

2 st./pc
068.5920.--
REYNAERS
4 x 14

CS 68					
005.0123.XX	CS 59-HV				
005.0140.XX	CS 59-Re				
005.0894.XX	CS 59-So				
005.1423.XX	CS 59-AD				
005.1440.XX	CS 59-CD				
005.1444.XX	CS 59-SD				
	CS 68-HV				
CS 68-FP	CS 68-Re				
005.0723.XX	CS 68-So				
	CS 77-HV				
CS 59	CS 59-AP				
TP 110	CS 68-AP				
CP 130	CS 77-AP				
CP 130-LS	CS 77-BP				
CP 155					
CP 155-LS					
CS 77					
CS 86-HI					
CF 77					

050.5153.-- = T-connection screw
068.5920.-- = T-connection drive pin
H=55.8/73.3 - B=105/51.8 - D=10.2/17.4

D0082241

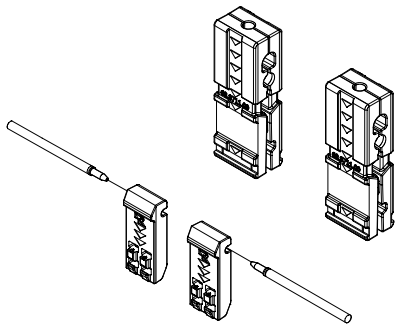

068.8734.00

T-VERBINDER 2x 17.9x25.8MM
JONCTION-T 2x 17.9x25.8MM
T-BRACKET 2x 17.9x25.8MM
T-VERBINDER 2x 17.9x25.8MM

CS 68	CS 77
005.0142.XX	CS 86-HI
005.0817.XX	CF 77
005.0824.XX	CS 77-SP
005.0847.XX	
005.0850.XX	CP 130
005.0854.XX	CP 130-LS
0K5.0817.XX	
0K5.0824.XX	
0K5.0847.XX	
0K5.0850.XX	
0K5.0854.XX	
CS 68-FP	
005.0747.XX	
CS 59	
CS 59-AD	
CP 155	
CP 155-LS	

2 st./pc
068.5938.--
-
Ø4 x 60

2 st./pc
050.5153.--
-
4.8 x 13.8

2 st./pc
068.5920.--
REYNAERS
4 x 14

050.5153.-- = T-connection screw
068.5920.-- = T-connection drive pin
H=41/73.3 - B=17.9/25.8 - D=10.2/17.4

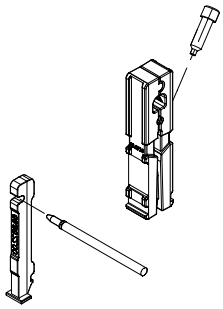

068.8735.00

T-VERBINDER 5X14MM
JONCTION-T 5X14MM
T-BRACKET 5X14MM
T-VERBINDER 5X14MM

CS 68		CW 50
005.0113.XX	CS 68-Re	CW 60
005.0136.XX	005.1213.XX	CS 77
005.0139.XX	005.1236.XX	CS 77-HV
005.0141.XX		CS 77-Re
005.0197.XX	CS 68-So	
005.0446.XX	005.1249.XX	
005.0447.XX	005.1270.XX	
005.0859.XX		
005.0896.XX	CS 68-FP	
005.1413.XX	005.0739.XX	
005.1426.XX		
005.1436.XX	CS 59	
005.1442.XX	CS 59-Re	
	CS 59-So	
CS 68-HV	TP 110	
005.0538.XX	CP 130	
005.1505.XX	CP 130-LS	
005.1513.XX	CP 155	
005.1536.XX	CP 155-LS	

1 st./pc
068.5938.--
-
Ø4 x 60

1 st./pc
050.5153.--
-
4.8 x 13.8

1 st./pc
068.5920.--
REYNAERS
4 x 14

050.5153.-- = T-connection screw
068.5920.-- = T-connection drive pin

D0082244

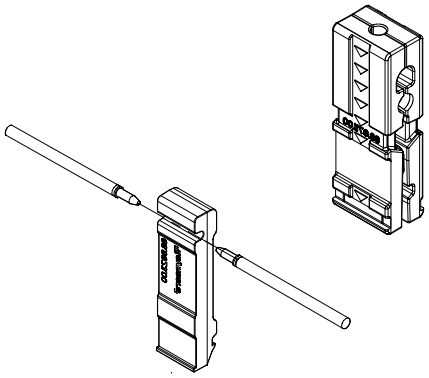

068.8736.00

T-VERBINDER 25.8x17.8MM
JONCTION-T 25.8x17.8MM
T-BRACKET 25.8x17.8MM
T-VERBINDER 25.8x17.8MM

2 st./pc
068.5938.--
-
Ø4 x 60

2 st./pc
050.5153.--
-
4.8 x 13.8

2 st./pc
068.5920.--
REYNAERS
4 x 14

CS 68	CS 68-HV	CP 130
005.0111.XX	005.1583.XX	CP 130-LS
005.0120.XX		CP 155
005.0183.XX	CS 68-Re	CP 155-LS
005.0258.XX	005.1216.XX	CS 77
005.0420.XX	005.1220.XX	CS 77-HV
005.0448.XX		CS 77-Re
005.0452.XX	CS 68-So	CS 104
005.0540.XX	005.1250.XX	
005.0860.XX	005.1271.XX	
005.0893.XX		
005.1100.XX	CS 68-FP	
005.1109.XX	005.0709.XX	
005.1110.XX	005.0719.XX	
005.1416.XX	005.0783.XX	
005.1443.XX		
005.1455.XX	CS 59	
005.1456.XX	CS 59-Re	
005.1483.XX	CS 59-So	
	TP 110	

050.5153.-- = T-connection screw
068.5920.-- = T-connection drive pin
H=62/73.27 B=17.9/25.77 D=10.4/17.4

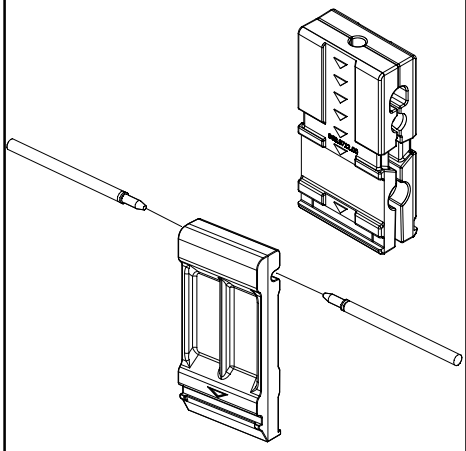

068.8737.00

T-VERBINDER 30.9x38.8MM
JONCTION-T 30.9x38.8MM
T-BRACKET 30.9x38.8MM
T-VERBINDER 30.9x38.8MM

2 st./pc
068.5938.--
-
Ø4 x 60

2 st./pc
050.5153.--
-
4.8 x 13.8

2 st./pc
068.5920.--
REYNAERS
4 x 14

CS 68	TP 110
005.0114.XX	CP 130
005.0125.XX	CP 130-LS
005.0155.XX	CP 155
005.0525.XX	CP 155-LS
005.0544.XX	CS 77
005.0897.XX	CS 77-HV
005.1414.XX	CS 77-BP
005.1425.XX	CS 77-FP
005.1451.XX	CS 77-SP
0K5.0155.XX	
CS 68-HV	
005.1506.XX	
CS 68-FP	
005.0925.XX	
005.0954.XX	
CS 59	

050.5153.-- = T-connection screw
068.5920.-- = T-connection drive pin
H=62/73.3 B=30.9/38.8 D=10.4/17.8

D0082246

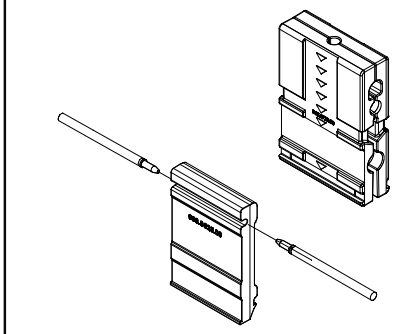

068.8738.00

T-VERBINDER 43.9x38.8MM
JONCTION-T 43.9x38.8MM
T-BRACKET 43.9x38.8MM
T-VERBINDER 43.9x38.8MM

2 st./pc
068.5938.--
-
Ø4 x 60

2 st./pc
050.5153.--
-
4.8 x 13.8

2 st./pc
068.5920.--
REYNAERS
4 x 14

CS 68
005.0123.XX
005.0140.XX
005.0894.XX
005.1423.XX
005.1440.XX
005.1444.XX

CS 68-FP
005.0723.XX

CS 59
TP 110
CP 130
CP 130-LS
CP 155
CP 155-LS
CS 77

050.5153.-- = T-connection screw
068.5920.-- = T-connection drive pin
H=62/73.3 B=43.9/51.8 D=10.4/17.4

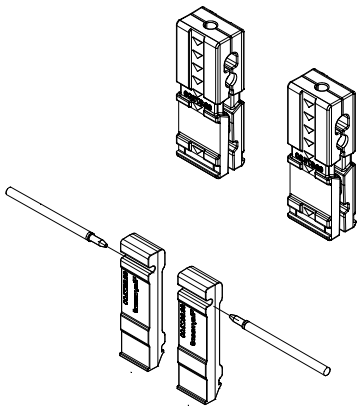

068.8739.00

T-VERBINDER 2x25.8x17.9MM
JONCTION-T 2x25.8x17.9MM
T-BRACKET 2x25.8x17.9MM
T-VERBINDER 2x25.8x17.9MM

2 st./pc
068.5938.--
-
Ø4 x 60

2 st./pc
050.5153.--
-
4.8 x 13.8

2 st./pc
068.5920.--
REYNAERS
4 x 14

CS 68
005.0817.XX
005.0824.XX
005.0847.XX
005.0850.XX
005.0854.XX
0K5.0817.XX
0K5.0824.XX
0K5.0847.XX
0K5.0850.XX
0K5.0854.XX

CS 68-FP
005.0747.XX

CS 59
CP 155
CP 155-LS
CS 77

050.5153.-- = T-connection screw
068.5920.-- = T-connection drive pin
H=62/73.27 B=17.9/25.77 D=10.4/17.4

D0082251

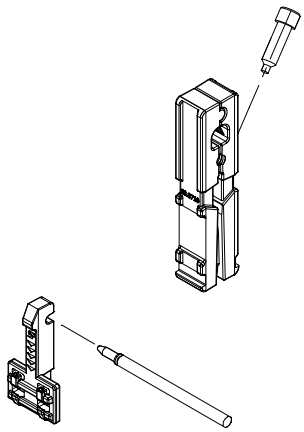

068.8740.00

T-VERBINDER 5x14MM
JONCTION-T 5x14MM
T-BRACKET 5x14MM
T-VERBINDER 5x14MM

1 st./pc
068.5938.--
-
Ø4 x 60

1 st./pc
050.5153.--
-
4.8 x 13.8

1 st./pc
068.5920.--
REYNAERS
4 x 14

CS 68	005.1505.XX	CP 130	CS 77-BP		
005.0113.XX	005.1513.XX	CP 130-LS			
005.0136.XX	005.1536.XX	CP 155			
005.0139.XX		CP 155-LS			
005.0141.XX	CS 68-Re	CW 50			
005.0197.XX	005.1213.XX	CW 50-HI			
005.0446.XX	005.1236.XX	CW 60			
005.0447.XX		CS 77			
005.0826.XX	CS 68-So	CS 77-HV			
005.0859.XX	005.1249.XX	CW 60-DRL			
005.0896.XX	005.1270.XX	CS 86-HI			
005.1413.XX		CS 77-Re			
005.1426.XX	CS 68-FP	CF 77			
005.1436.XX	005.0739.XX				
005.1442.XX		CS 59-AD			
0OS.4746.XX	CS 59	CS 59-CD			
0OS.4747.XX	CS 59-HV	CS 59-SD			
	CS 59-Re	CS 59-AP			
CS 68-HV	CS 59-So	CS 68-AP			
005.0538.XX	TP 110	CS 77-AP			

050.5153.-- = T-connection screw
068.5920.-- = T-connection drive pin
H=42/73.3 B=22/12.5 D=10.2/17.4

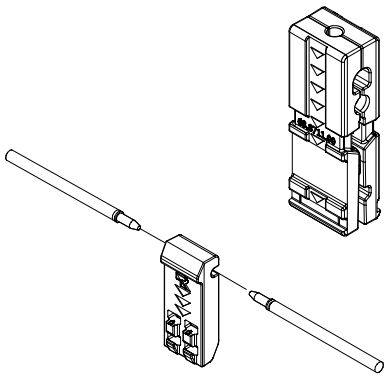

068.8741.00

T-VERBINDER 17.9x25.8MM
JONCTION-T 17.9x25.8MM
T-BRACKET 17.9x25.8MM
T-VERBINDER 17.9x25.8MM

2 st./pc
068.5938.--
-
Ø4 x 60

2 st./pc
050.5153.--
-
4.8 x 13.8

2 st./pc
068.5920.--
REYNAERS
4 x 14

CS 68	005.1483.XX	CS 59-Re			
005.0004.XX	0K5.0004.XX	CS 59-So			
005.0111.XX		TP 110			
005.0120.XX	CS 68-HV	CP 130			
005.0183.XX	005.1583.XX	CP 130-LS			
005.0258.XX		CP 155			
005.0420.XX	CS 68-Re	CP 155-LS			
005.0448.XX	005.1216.XX	CS 77			
005.0452.XX	005.1220.XX	CS 77-HV			
005.0540.XX		CS 86-HI			
005.0860.XX	CS 68-So	CS 77-Re			
005.0893.XX	005.1250.XX	CF 77			
005.1100.XX	005.1271.XX	CS 104			
005.1109.XX					
005.1110.XX	CS 68-FP				
005.1416.XX	005.0709.XX				
005.1443.XX	005.0719.XX				
005.1449.XX	005.0783.XX				
005.1455.XX					
005.1456.XX	CS 59				

050.5153.-- = T-connection screw
068.5920.-- = T-connection drive pin
H=42/73.27 B=17.9/25.77 D=10.2/17.4

D0082255

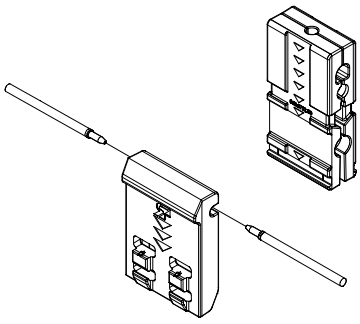

068.8742.00

T-VERBINDER 30.9x38.8MM
JONCTION-T 30.9x38.8MM
T-BRACKET 30.9x38.8MM
T-VERBINDER 30.9x38.8MM

CS 68		CS 59-CD			
005.0114.XX	CS 59	CS 59-SD			
005.0125.XX	TP 110	CS 68-Re			
005.0144.XX	CP 130	CS 68-So			
005.0155.XX	CP 130-LS	CS 59-AP			
005.0525.XX	CP 155	CS 68-AP			
005.0544.XX	CP 155-LS	CS 77-AP			
005.0886.XX	CS 77				
005.0897.XX	CS 77-HV				
005.1414.XX	CS 77-BP				
005.1425.XX	CS 77-FP				
005.1451.XX	CS 86-HI				
0K5.0155.XX	CF 77				
	CS 104				
CS 68-HV	CS 77-SP				
005.1506.XX					
	CS 59-HV				
CS 68-FP	CS 59-Re				
005.0925.XX	CS 59-So				
005.0954.XX	CS 59-AD				

2 st./pc
068.5938.--
-
Ø4 x 60

2 st./pc
050.5153.--
-
4.8 x 13.8

2 st./pc
068.5920.--
REYNAERS
4 x 14

050.5153.-- = T-connection screw
068.5920.-- = T-connection drive pin
H=42/73.3 B=30.9/38.8 D=10.2/17.4

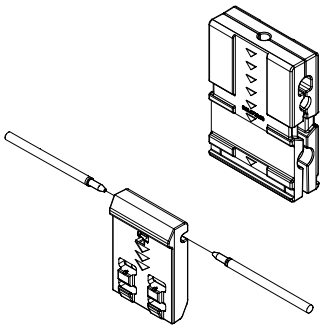

068.8743.00

T-VERBINDER 43.9x38.8MM
JONCTION-T 43.9x38.8MM
T-BRACKET 43.9x38.8MM
T-VERBINDER 43.9x38.8MM

CS 68					
005.0123.XX	CS 59-HV				
005.0140.XX	CS 59-Re				
005.0894.XX	CS 59-So				
005.1423.XX	CS 59-AD				
005.1440.XX	CS 59-CD				
005.1444.XX	CS 59-SD				
	CS 68-HV				
CS 68-FP	CS 68-Re				
005.0723.XX	CS 68-So				
	CS 77-HV				
CS 59	CS 59-AP				
TP 110	CS 68-AP				
CP 130	CS 77-AP				
CP 130-LS	CS 77-BP				
CP 155					
CP 155-LS					
CS 77					
CS 86-HI					
CF 77					

2 st./pc
068.5938.--
-
Ø4 x 60

2 st./pc
050.5153.--
-
4.8 x 13.8

2 st./pc
068.5920.--
REYNAERS
4 x 14

050.5153.-- = T-connection screw
068.5920.-- = T-connection drive pin
H=42/73.3 B=43.9/51.8 D=10.2/17.4

D0082256

T-VERBINDING VERSTELBAAR
RACCORDEMENT-T REGLABLE
T-CONNECTION ADJUSTABLE
T-VERBINDUNG VERSTELLBAR

Reynaers Aluminium

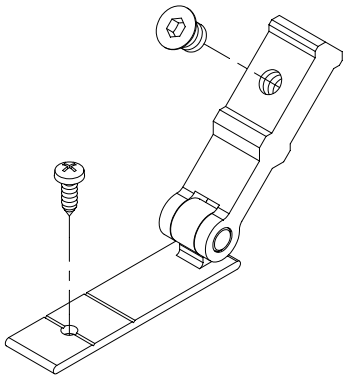

068.8779.00

T-VERBINDER VARIABEL
JONCTION-T VARIABLE
VARIABLE T-BRACKET
VARIABELER T-VERBINDER

1 st./pc
052.5317.--

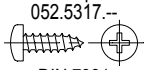

DIN 7981
4.2 x 13

1 st./pc
050.5091.--

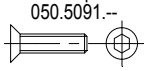

-
M8 x 10

CS 68	005.1456.XX	CS 77-Re			
005.0111.XX	005.1483.XX	CF 77			
005.0113.XX	005.1492.XX	CS 104			
005.0114.XX	0K5.0817.XX	CS 77-SP			
005.0120.XX	0K5.0824.XX				
005.0123.XX	0K5.0847.XX				
005.0125.XX	0K5.0850.XX				
005.0136.XX	0K5.0854.XX				
005.0139.XX					
005.0140.XX	CS 68-HV				
005.0141.XX	005.1505.XX				
005.0142.XX	005.1506.XX				
005.0183.XX	005.1513.XX				
005.0197.XX	005.1536.XX				
005.0258.XX	005.1583.XX				
005.0420.XX					
005.0446.XX	CS 68-Re				
005.0447.XX	005.1213.XX				
005.0448.XX	005.1216.XX				
005.0452.XX	005.1220.XX				
005.0525.XX	005.1236.XX				
005.0540.XX					
005.0544.XX	CS 68-So				
005.0817.XX	005.1249.XX				
005.0824.XX	005.1250.XX				
005.0826.XX	005.1270.XX				
005.0847.XX	005.1271.XX				
005.0850.XX					
005.0854.XX	CS 68-FP				
005.0859.XX	005.0709.XX				
005.0860.XX	005.0719.XX				
005.0893.XX	005.0739.XX				
005.0894.XX	005.0747.XX				
005.0896.XX	005.0783.XX				
005.0897.XX	005.0925.XX				
005.1100.XX	005.0954.XX				
005.1109.XX					
005.1110.XX	CS 59				
005.1402.XX	CS 59-Re				
005.1412.XX	CS 59-So				
005.1413.XX	TP 110				
005.1414.XX	CP 130				
005.1416.XX	CP 130-LS				
005.1421.XX	CP 155				
005.1423.XX	CP 155-LS				
005.1425.XX	CW 50				
005.1426.XX	CW 60				
005.1436.XX	CS 77				
005.1440.XX	CS 77-HV				
005.1442.XX	CS 77-BP				
005.1443.XX	CS 77-FP				
005.1444.XX	TP 110-Re				
005.1449.XX	Eco system				
005.1451.XX	CS 86-HI				
005.1455.XX	Eco system-AP				

H=65 B=65 D=17/18
USE WITH 068.8906.04

D0082261

G

068.8906.04

VULBLOK
PIECE DE REMPLISSAGE
FILLING PIECE
FUELLBLOCK CS

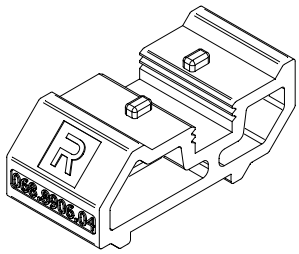

CS 68	
005.0111.XX	CS 68-Re
005.0112.XX	005.0221.XX
005.0114.XX	005.0292.XX
005.0120.XX	005.1216.XX
005.0121.XX	005.1220.XX
005.0123.XX	
005.0125.XX	CS 68-So
005.0140.XX	005.0203.XX
005.0142.XX	005.0252.XX
005.0183.XX	005.1250.XX
005.0192.XX	005.1271.XX
005.0258.XX	
005.0420.XX	CS 68-FP
005.0448.XX	005.0709.XX
005.0452.XX	005.0719.XX
005.0525.XX	005.0747.XX
005.0540.XX	005.0783.XX
005.0544.XX	005.0925.XX
005.0817.XX	005.0954.XX
005.0824.XX	
005.0847.XX	CS 59
005.0850.XX	CS 59-Re
005.0854.XX	CS 59-So
005.0860.XX	TP 110
005.0893.XX	CP 130
005.0894.XX	CP 130-LS
005.0897.XX	CP 155
005.1100.XX	CP 155-LS
005.1109.XX	CS 77
005.1110.XX	CS 77-HV
005.1412.XX	CS 77-BP
005.1414.XX	CS 77-FP
005.1416.XX	Eco system
005.1421.XX	CS 86-HI
005.1423.XX	Eco system-AP
005.1425.XX	CS 77-Re
005.1440.XX	CF 77
005.1443.XX	CS 104
005.1444.XX	CS 77-SP
005.1449.XX	
005.1451.XX	
005.1455.XX	
005.1456.XX	
005.1483.XX	
005.1492.XX	
0K5.0817.XX	
0K5.0824.XX	
0K5.0847.XX	
0K5.0850.XX	
0K5.0854.XX	
CS 68-HV	
005.1506.XX	
005.1583.XX	

USE WITH 068.8905.00 OR 068.8779.00
H=18.3 B=17.3 D=36.65

D0082264

CS 68-FP

EW 30

SCHROEF PERSHOEK/SCHROEFHOEK/NAGELHOEK/T-VERBINDER
VIS EQUER. A SERT./EQUER. A VIS./EQUER. AVEC CHEV./JONCTION-T
SCREW CORNER CLEAT/SCREW CORN. CLEAT/CORN. CLEAT W./ T-BRACKET
SCHRAUBE PRESSECKW./SCHRAUBECKW./ECKW. MIT STIFT/ T-VERBINDER

Reynaers Aluminium

050.5153.--

SCHROEF 4.8x13.8MM
VIS 4.8x13.8MM
SCREW 4.8x13.8MM
SCHRAUBE 4.8x13.8MM

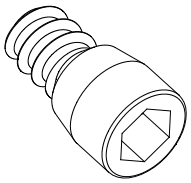

CS 68	005.1426.XX	005.0783.XX
005.0004.XX	005.1436.XX	005.0925.XX
005.0102.XX	005.1440.XX	005.0954.XX
005.0105.XX	005.1442.XX	
005.0111.XX	005.1443.XX	CS 59
005.0113.XX	005.1444.XX	CS 59-HV
005.0114.XX	005.1449.XX	CS 59-Re
005.0120.XX	005.1451.XX	CS 59-So
005.0123.XX	005.1455.XX	CS 59-AD
005.0125.XX	005.1456.XX	TP 110
005.0136.XX	005.1483.XX	CP 130
005.0139.XX	005.1492.XX	CP 130-LS
005.0140.XX	0K5.0004.XX	CP 155
005.0141.XX	0K5.0155.XX	CP 155-LS
005.0142.XX	0K5.0817.XX	CW 50
005.0144.XX	0K5.0824.XX	CW 50-HI
005.0155.XX	0K5.0847.XX	CW 60
005.0183.XX	0K5.0850.XX	CR 120
005.0192.XX	0K5.0854.XX	CS 77
005.0197.XX	0OS.4854.XX	CS 77-HV
005.0258.XX		CS 77-BP
005.0420.XX	CS 68-HV	CS 77-FP
005.0446.XX	005.0538.XX	CW 60-DRL
005.0447.XX	005.1505.XX	TP 110-Re
005.0448.XX	005.1506.XX	Eco system
005.0452.XX	005.1513.XX	CS 86-HI
005.0525.XX	005.1536.XX	Eco system-AP
005.0540.XX	005.1583.XX	CS 77-Re
005.0544.XX	005.2499.XX	Eco system Optima
005.0817.XX	005.2502.XX	CF 77
005.0824.XX	005.2503.XX	CS 104
005.0826.XX	005.2504.XX	CS 77-SP
005.0847.XX		
005.0850.XX	CS 68-Re	CS 59-CD
005.0854.XX	005.0202.XX	CS 59-SD
005.0859.XX	005.0292.XX	CS 59-AP
005.0860.XX	005.1213.XX	CS 68-AP
005.0886.XX	005.1216.XX	CS 77-AP
005.0893.XX	005.1220.XX	
005.0894.XX	005.1236.XX	
005.0896.XX		
005.0897.XX	CS 68-So	
005.1001.XX	005.0203.XX	
005.1100.XX	005.0251.XX	
005.1109.XX	005.1249.XX	
005.1110.XX	005.1250.XX	
005.1401.XX	005.1270.XX	
005.1402.XX	005.1271.XX	
005.1412.XX		
005.1413.XX	CS 68-FP	
005.1414.XX	005.0709.XX	
005.1416.XX	005.0719.XX	
005.1421.XX	005.0723.XX	
005.1423.XX	005.0739.XX	
005.1425.XX	005.0747.XX	

H= Ø6.9
B= 13.8

D0082266

G

CS 68-FP

EW 30

NAGEL PERSHOEK/SCHROEFHOEK/NAGELHOEK/T-VERBINDER
CLOU EQUER. A SERT./EQUER. A VIS./EQUER. AVEC CHEV./JONCTION-T
DRIVE PIN CORNER CLEAT/SCREW CORN. CLEAT/CORN. CLEAT W./ T-BRACKET
STIFT PRESSECKW./SCHRAUBECKW./ECKW. MIT STIFT/ T-VERBINDER

Reynaers Aluminium

068.5920.--

NAGEL T-VERBINDER Ø7mm
CLOU JONCTION-T Ø7mm
DRIVE PIN T-BRACKET Ø7mm
STIFT T-VERBINDER Ø7mm

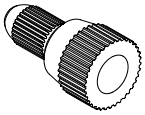

H= Ø7

CS 68	005.0420.XX	005.0897.XX	005.1449.XX		CS 59-So
005.0102.XX	005.0446.XX	005.1001.XX	005.1451.XX	CS 68-Re	TP 110
005.0105.XX	005.0447.XX	005.1100.XX	005.1455.XX	005.0202.XX	CP 130
005.0111.XX	005.0448.XX	005.1109.XX	005.1456.XX	005.0292.XX	CP 130-LS
005.0113.XX	005.0452.XX	005.1110.XX	005.1483.XX	005.1213.XX	CP 155
005.0114.XX	005.0453.XX	005.1401.XX	005.1536.XX	005.1220.XX	CP 155-LS
005.0120.XX	005.0454.XX	005.1402.XX	0K5.0155.XX		CW 50
005.0123.XX	005.0525.XX	005.1412.XX	0K5.0817.XX	CS 68-So	CW 50-HI
005.0125.XX	005.0540.XX	005.1413.XX		005.0203.XX	CW 60
005.0136.XX	005.0544.XX	005.1414.XX	CS 68-HV	005.0251.XX	CR 120
005.0139.XX	005.0817.XX	005.1416.XX	005.0538.XX		CS 77
005.0140.XX	005.0824.XX	005.1421.XX	005.1505.XX	CS 68-FP	CS 77-HV
005.0141.XX	005.0826.XX	005.1423.XX	005.1506.XX	005.0723.XX	CS 77-BP
005.0142.XX	005.0847.XX	005.1425.XX	005.1513.XX	005.0739.XX	CS 77-FP
005.0144.XX	005.0850.XX	005.1426.XX	005.1536.XX	005.0925.XX	CW 60-DRL
005.0155.XX	005.0854.XX	005.1436.XX	005.1583.XX	005.0954.XX	Eco system
005.0183.XX	005.0886.XX	005.1440.XX	005.2499.XX		CS 86-HI
005.0192.XX	005.0893.XX	005.1442.XX	005.2502.XX	CS 59	Eco system-AP
005.0197.XX	005.0894.XX	005.1443.XX	005.2503.XX	CS 59-HV	CS 77-Re
005.0258.XX	005.0896.XX	005.1444.XX	005.2504.XX	CS 59-Re	Eco system Optima

068.8937.--

NAGEL T-VERBINDER
CLOU JONCTION-T
DRIVE PIN T-BRACKET
STIFT T-VERBINDER

st./pc
068.8937.--

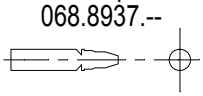

-
Ø4 x 60

Ø4mm
D=60mm

CS 68	005.0446.XX	005.1412.XX			CS 77
005.0102.XX	005.0447.XX	005.1413.XX	CS 68-HV	CS 68-FP	CW 86
005.0105.XX	005.0448.XX	005.1414.XX	005.0538.XX	005.0723.XX	CS 77-HV
005.0111.XX	005.0452.XX	005.1416.XX	005.1505.XX	005.0739.XX	CS 77-BP
005.0113.XX	005.0453.XX	005.1421.XX	005.1506.XX	005.0925.XX	CS 77-FP
005.0114.XX	005.0454.XX	005.1423.XX	005.1513.XX	005.0954.XX	CW 60-DRL
005.0120.XX	005.0525.XX	005.1425.XX	005.1536.XX		CW 86-EF
005.0123.XX	005.0540.XX	005.1426.XX	005.1583.XX	CS 59	Eco system
005.0125.XX	005.0544.XX	005.1436.XX	005.2499.XX	CS 59-HV	CS 86-HI
005.0136.XX	005.0826.XX	005.1440.XX	005.2502.XX	CS 59-Re	Eco system-AP
005.0139.XX	005.0886.XX	005.1442.XX	005.2503.XX	CS 59-So	CW 60-HL
005.0140.XX	005.0893.XX	005.1443.XX	005.2504.XX	TP 110	CW 86-EF/HI
005.0141.XX	005.0894.XX	005.1444.XX		CP 130	CS 77-Re
005.0142.XX	005.0896.XX	005.1449.XX	CS 68-Re	CP 130-LS	CW 65-EF
005.0144.XX	005.0897.XX	005.1451.XX	005.0202.XX	CP 155	CF 77
005.0183.XX	005.1001.XX	005.1455.XX	005.0292.XX	CP 155-LS	CS 104
005.0192.XX	005.1100.XX	005.1456.XX		CW 50	CS 77-SP
005.0197.XX	005.1109.XX	005.1483.XX	CS 68-So	CW 50-HI	CS 77 Optima
005.0258.XX	005.1110.XX	005.1492.XX	005.0203.XX	CW 50-HL	CF 77-AP
005.0420.XX	005.1402.XX	005.1536.XX	005.0251.XX	CW 60	CW 50-VL

D0082268

G

AFDICHTINGSSTUK T-VERBINDER
PIECE D'ETANCHEITE JONCTION-T
SEALING T-BRACKET
ABDICHTUNG T-VERBINDER

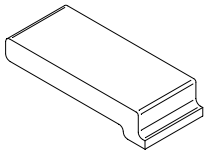

H=6.3
B=32.6
D=13.5

068.8678.04

AFDICHTINGSSTUK T-VERBINDER
PIECE D'ETANCHEITE JONCTION-T
SEALING T-BRACKET
ABDICHTUNG T-VERBINDER

CS 68
005.1016.XX
005.3014.XX
005.3026.XX

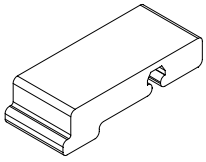

H=8.3
B=13.5
D=32.7

068.8680.04

AFDICHTINGSSTUK T-VERBINDER
PIECE D'ETANCHEITE JONCTION-T
SEALING T-BRACKET
ABDICHTUNG T-VERBINDER

CS 68
005.0004.XX
005.0111.XX
005.0113.XX
005.0114.XX
005.0120.XX
005.0123.XX
005.0125.XX
005.0136.XX
005.0139.XX
005.0140.XX
005.0141.XX
005.0142.XX
005.0144.XX
005.0155.XX
005.0183.XX
005.0197.XX
005.0258.XX
005.0420.XX
005.0446.XX
005.0447.XX
005.0448.XX
005.0452.XX
005.0544.XX
005.0813.XX
005.0817.XX
005.0824.XX
005.0826.XX
005.0847.XX
005.0850.XX
005.0854.XX
005.0886.XX
005.1100.XX
005.1109.XX
005.1110.XX
005.1449.XX
0K5.0004.XX
0K5.0155.XX
0K5.0817.XX
0K5.0824.XX
0K5.0847.XX
0K5.0850.XX
0K5.0854.XX

CS 68-HV
005.0538.XX
005.1505.XX
005.1506.XX
005.1513.XX
005.1536.XX
005.1583.XX

CS 68-Re
005.1213.XX
005.1216.XX
005.1220.XX
005.1236.XX

CS 68-So
005.1249.XX
005.1250.XX
005.1270.XX
005.1271.XX

CS 68-FP
005.0709.XX
005.0719.XX
005.0723.XX
005.0739.XX
005.0783.XX
005.0925.XX
005.0954.XX

CP 130
CP 130-LS
CW 50
CW 60

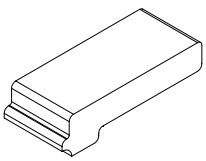

H=8.3
B=13.5
D=32.7

068.8681.04

AFDICHTINGSSTUK T-VERBINDER
PIECE D'ETANCHEITE JONCTION-T
SEALING T-BRACKET
ABDICHTUNG T-VERBINDER

CS 68
005.0102.XX
005.0112.XX
005.0121.XX
005.0192.XX
005.0525.XX
005.0859.XX
005.0860.XX
005.1402.XX
005.1412.XX
005.1421.XX
005.1492.XX
005.1521.XX

CS 68-FP
005.0747.XX

D0082276

AFDICHTINGSSTUK T-VERBINDER
PIECE D'ETANCHEITE JONCTION-T
SEALING T-BRACKET
ABDICHTUNG T-VERBINDER

Reynaers Aluminium

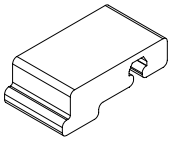

068.8684.04

AFDICHTINGSSTUK T-VERBINDER
PIECE D'ETANCHEITE JONCTION-T
SEALING T-BRACKET
ABDICHTUNG T-VERBINDER

CS 68
005.0540.XX
005.1455.XX
005.1456.XX

CS 59
CS 59-HV
CS 59-AD
TP 110
CW 50
CW 60

H=8.3
B=13.5
D=23.7

D0082277

G

069.6831.XX

AFDEKKAP WATERAFVOERSLEUVEN
CAPUCHON DRAINAGE D'EAU
WEEP HOLE COVER
ABDECKKAPPE ENTWAESSERUNG

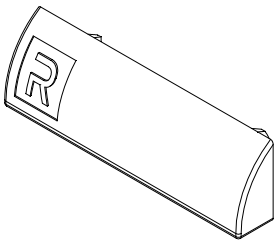

CS 59Pa	CP 155	CS 59-PD
CS 59Pa-AD	CP 155-LS	CS 68-PD
CS 59Pa-CD	CS 68-FP	CS 68-FP/PD
CS 59Pa-SD	CS 77	CS 77-PD
CS 59	CS 77-HV	Eco system
CS 59-HV	CS 59Pa-AP	CS 86-HI
CS 59-Re	CS 59-AP	Eco system-AP
CS 59-So	CS 68-AP	CS 77-Re
CS 59-AD	CS 77-AP	Eco system Optima
CS 59-CD	CS 77-BP	Eco system 75
CS 59-SD	CS 77-FP	CS 86-HI/AP
CS 68	TP 110-AP	CS 68 Optima-AP
CS 68-HV	CP 155-AP	Eco system Optima-AP
CS 68-Re	CP 155-LS/AP	CF 77
CS 68-So	CP 96	CS 104
TP 110	CP 96-LS	CS 77-SP
TP 138	CP 96-AP	
TLS 110	CP 96-LS/AP	
CP 130	TP 110-Re	
CP 130-LS	CS 68 Optima	

H=13
B=44
D=11.3

D0082280

DRAAIRAAM SOBINCO CHRONO SAFE
FENETRE OUVR. A LA FRANC. SOBINCO CHRONO SAFE
SIDE HUNG WINDOW SOBINCO CHRONO SAFE
DREHFENSTER SOBINCO CHRONO SAFE

060.9118.--

KRUKZIJDE DR/VR INBRAAKWEREND 400<FB<1800
COTE DE LA BEQUILLE FO/FS PROTECTION ANTI-VOL
HANDLE SIDE SH/BH BURGLAR PROTECTION 400<FB<1
DRUCKERSEITE DF/KF EINBRUCHHEMMEND 400<FB<180

CS 59Pa-AP
CS 59-AP
CS 68-AP
CS 77-AP
Eco system-AP
CS 38-SL/AP
CS 86-HI/AP

D0082575

G

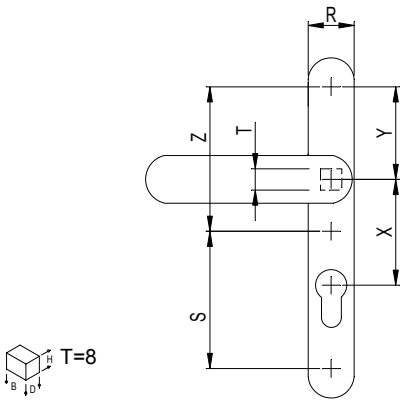

T=8

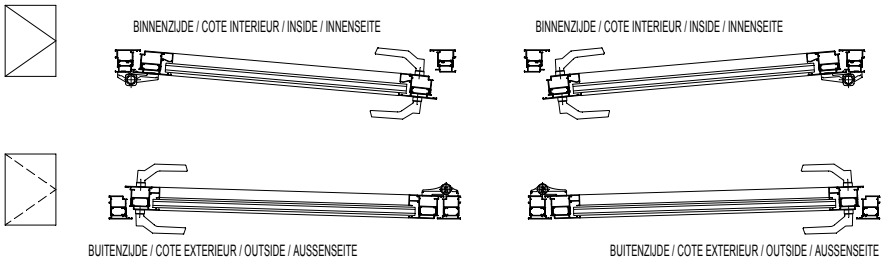

DIN LINKS / DIN GAUCHE / DIN LEFT / DIN LINKS

DIN RECHTS / DIN DROITE / DIN RIGHT / DIN RECHTS

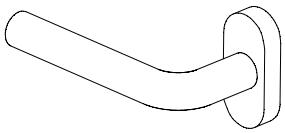 H=66 B=135 D=71 Z=43 R=31	061.7118.XX DEURKRUK BEQUILLE DOOR HANDLE TUERDRUECKER DIN L	CS 59 CS 68 CS 77 Eco system CS 38-SL CS 86-HI CS 77-SP		2 st./pc 050.5161.-- DIN 965 M5 x 16
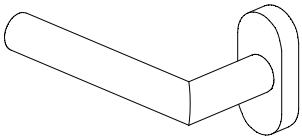 H=66 B=135 D=71 Z=43 R=31	061.7119.XX DEURKRUK BEQUILLE DOOR HANDLE TUERDRUECKER DIN L	CS 59 CS 68 CS 77 Eco system CS 38-SL CS 86-HI CS 77-SP		2 st./pc 050.5161.-- DIN 965 M5 x 16
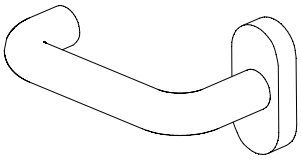 H=66 B=139.5 D=71 Z=43 R=31	061.7120.XX DEURKRUK BEQUILLE DOOR HANDLE TUERDRUECKER DIN L	CS 59 CS 68 CS 77 Eco system CS 38-SL CS 86-HI CS 77-SP		2 st./pc 050.5161.-- DIN 965 M5 x 16

D0082599

CS 68-FP
EW 30

DEURKRUK
BEQUILLE
DOOR HANDLE
TUERDRUECKER

Reynaers Aluminium

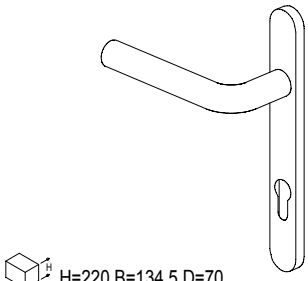 H=220 B=134.5 D=70 Z=43 X=92 S=118.5 R=28	061.7121.XX DEURKRUK BEQUILLE DOOR HANDLE TUERDRUECKER DIN L	CS 59 CS 68 CS 77 Eco system CS 38-SL CS 86-HI CS 77-SP		3 st./pc 050.5161.-- DIN 965 M5 x 16
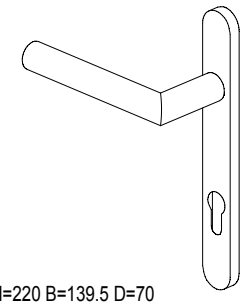 H=220 B=139.5 D=70 Z=43 X=92 S=118.5 R=28	061.7122.XX DEURKRUK BEQUILLE DOOR HANDLE TUERDRUECKER DIN L	CS 59 CS 68 CS 77 Eco system CS 38-SL CS 86-HI CS 77-SP		3 st./pc 050.5161.-- DIN 965 M5 x 16
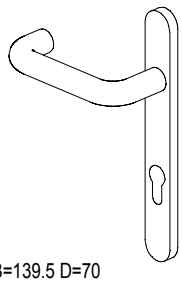 H=220 B=139.5 D=70 Z=43 X=92 S=118.5 R=28	061.7123.XX DEURKRUK BEQUILLE DOOR HANDLE TUERDRUECKER DIN L	CS 59 CS 68 CS 77 Eco system CS 38-SL CS 86-HI CS 77-SP		3 st./pc 050.5161.-- DIN 965 M5 x 16
 H=66 B=71 D=134.5 Z=43 R=31	061.7218.XX DEURKRUK BEQUILLE DOOR HANDLE TUERDRUECKER DIN R	CS 59 CS 68 CS 77 Eco system CS 38-SL CS 86-HI CS 77-SP		2 st./pc 050.5161.-- DIN 965 M5 x 16
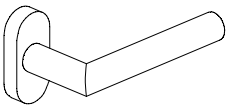 H=66 B=71 D=139.5 Z=43 R=31	061.7219.XX DEURKRUK BEQUILLE DOOR HANDLE TUERDRUECKER DIN R	CS 59 CS 68 CS 77 Eco system CS 38-SL CS 86-HI CS 77-SP		2 st./pc 050.5161.-- DIN 965 M5 x 16

D0082602

G

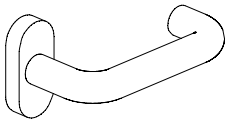 H=66 B=71 D=139.5 Z=43 R=31	061.7220.XX DEURKRUK BEQUILLE DOOR HANDLE TUERDRUECKER DIN R	CS 59 CS 68 CS 77 Eco system CS 38-SL CS 86-HI CS 77-SP		2 st./pc 050.5161.-- DIN 965 M5 x 16
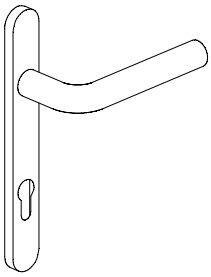 H= 220 B=70 D=134.5 Z=43 X=92 S=118.5 R=28	061.7221.XX DEURKRUK BEQUILLE DOOR HANDLE TUERDRUECKER DIN R	CS 59 CS 68 CS 77 Eco system CS 38-SL CS 86-HI CS 77-SP		3 st./pc 050.5161.-- DIN 965 M5 x 16
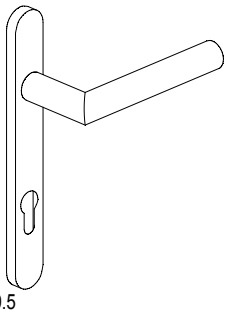 H= 220 B=70 D=139.5 Z=43 X=92 S=118.5 R=28	061.7222.XX DEURKRUK BEQUILLE DOOR HANDLE TUERDRUECKER DIN R	CS 59 CS 68 CS 77 Eco system CS 38-SL CS 86-HI CS 77-SP		3 st./pc 050.5161.-- DIN 965 M5 x 16
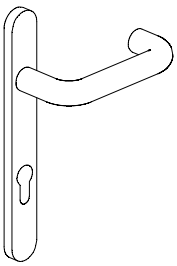 H= 220 B=70 D=139.5 Z=43 X=92 S=118.5 R=28	061.7223.XX DEURKRUK BEQUILLE DOOR HANDLE TUERDRUECKER DIN R	CS 59 CS 68 CS 77 Eco system CS 38-SL CS 86-HI CS 77-SP		3 st./pc 050.5161.-- DIN 965 M5 x 16
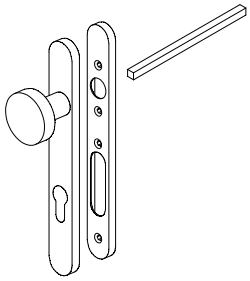 +SPINDLE INCLUDED L=125MM Z=43 X=92 S=118.5 R=28	061.7224.XX VASTE KNOP BOUTON FIXE FIXED HANDLE FESTSTEHENDER KNOPF	CS 59 CS 68 CS 77 Eco system CS 38-SL CS 86-HI CS 77-SP		3 st./pc 050.5161.-- DIN 965 M5 x 16

D0082606

CS 68-FP
EW 30

DEURKRUK
BEQUILLE
DOOR HANDLE
TUERDRUECKER

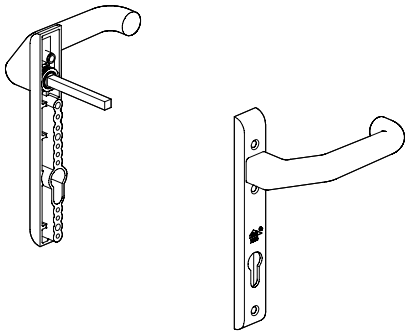

H=206.5 B=68.5 D=156
Z=43 S=118.5 X=92 Y=21.5
Eco/CS 68-AP=061.8753.--

061.9942.XX

DEURKRUK INBRAAKWEREND
BEQUILLE PROTECTION ANTI-VOL
DOOR HANDLE BURGLAR PROTECTION
TUERDRUECKER EINBRUCHHEMMEND

CS 77-AP=061.8754.--

CS 68-AP
Eco system-AP

1 st./pc
061.8753.--
SET
-

1 st./pc
061.8754.--
SET
-

D0082610

G

VIERKANTSTIFT
TIGE
SPINDLE
DRUCKERSTIFT

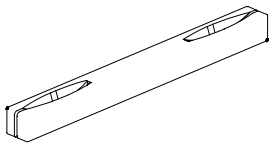 H=8 B=8 D=115	061.7092.-- VIERKANTSTIFT 8MM L=115MM TIGE 8MM L=115MM SPINDLE 8MM L=115MM DRUCKERSTIFT 8MM L=115MM		CS 59 CS 68 CS 77 Eco system CS 38-SL CS 86-HI		
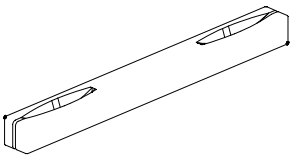 H=8 B=8 D=125	061.7093.-- VIERKANTSTIFT 8MM L=125MM TIGE 8MM L=125MM SPINDLE 8MM L=125MM DRUCKERSTIFT 8MM L=125MM		CS 68 CS 38-SL		
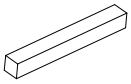 H=8 B=8 D=65	061.7094.-- VIERKANTSTIFT 8MM L=65MM TIGE 8MM L=65MM SPINDLE 8MM L=65MM DRUCKERSTIFT 8MM L=65MM		CS 59Pa CS 59 CS 68 CS 77 CS 77-BP CP 96 CP 96-AP Eco system		
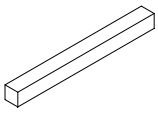 H=8 B=8 D=85	061.7095.-- VIERKANTSTIFT 8MM L=85MM TIGE 8MM L=85MM SPINDLE 8MM L=85MM DRUCKERSTIFT 8MM L=85MM		CS 59Pa CS 59 CS 68 CS 77 CS 77-BP Eco system		
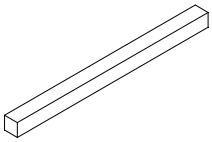 H=8 B=8 D=119	061.7097.-- VIERKANTSTIFT 8MM L=119MM TIGE 8MM L=119MM SPINDLE 8MM L=119MM DRUCKERSTIFT 8MM L=119MM		CS 59Pa CS 59 CS 68 CS 77 CS 77-BP Eco system CF 77		

D0082611

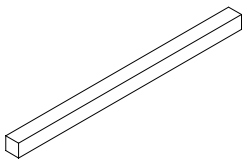 H=8 B=8 D=139	061.7098.-- VIERKANTSTIFT 8MM L=139MM TIGE 8MM L=139MM SPINDLE 8MM L=139MM DRUCKERSTIFT 8MM L=139MM		CS 59Pa CS 59 CS 68 CS 77 CS 77-BP Eco system		
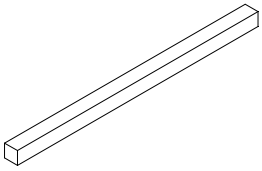 H=8 B=8 D=150	061.7099.-- VIERKANTSTIFT 8MM L=150MM TIGE 8MM L=150MM SPINDLE 8MM L=150MM DRUCKERSTIFT 8MM L=150MM		CS 59Pa CS 59 CS 68 CS 77 CS 77-BP Eco system		

D0082612

061.7354.ZC

5-PUNTSLOT
5 POINTS
5 POINT LOCK
5-FACHVERRIEGELUNG

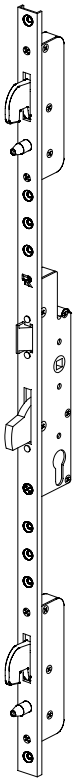

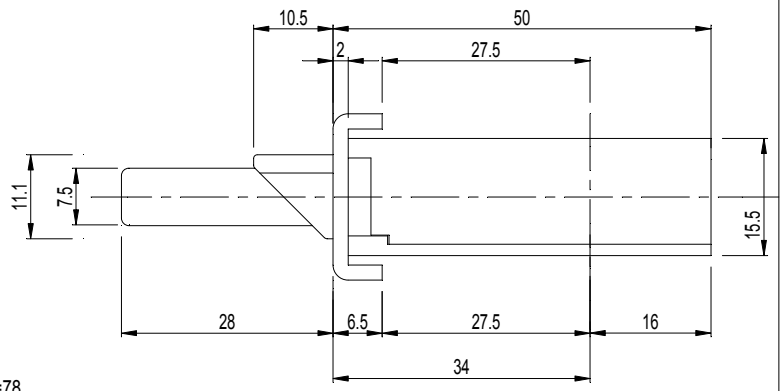

H=2170 B=22 D=78
STANDARD = 052.5316.--
AP = 050.5161.--/057.5711.--

U=43 X=92 Y=46 P=34

CS 68
005.1026.XX
005.1014.XX

CS 68-AP
005.3026.XX
005.3014.XX

CS 59Pa
CS 59
CS 77
CS 77-BP
CS 86-HI
Eco system
Eco system-AP
CS 77-AP

9 st./pc
050.5161.--
DIN 965
M5 x 16

9 st./pc
052.5316.--
DIN 7982
4.2 x 19

9 st./pc
057.5711.--
M5

061.7454.ZC

5-PUNTSLOT
5 POINTS
5 POINT LOCK
5-FACHVERRIEGELUNG

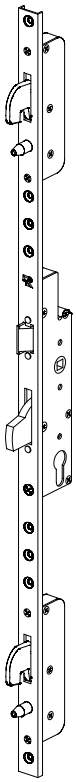

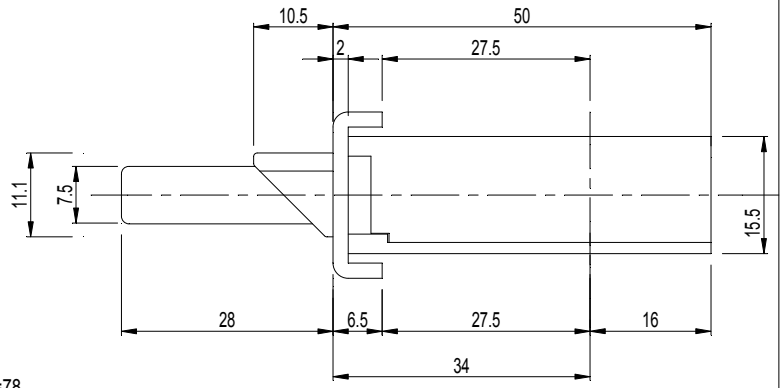

H=2170 B=22 D=78
STANDARD = 052.5316.--
AP = 050.5161.--/057.5711.--

U=43 X=92 Y=46 P=34

CS 68
005.1026.XX
005.1014.XX

CS 68-AP
005.3026.XX
005.3014.XX

CS 59Pa
CS 59
CS 77
CS 77-BP
CS 86-HI
Eco system
Eco system-AP
CS 77-AP

9 st./pc
050.5161.--
DIN 965
M5 x 16

9 st./pc
052.5316.--
DIN 7982
4.2 x 19

9 st./pc
057.5711.--
M5

D0082285

061.7356.ZC

5-PUNTSLUITING
FERMETURE A 5 POINTS
5-POINT LOCK
5-FACHVERRIEGELUNG

CS 68-AP
005.3026.XX
005.3014.XX

Eco system
Eco system-AP
CS 77-AP

CS 59
CS 68
CS 77

9 st./pc
050.5011.--
DIN 965
M5 x 20

9 st./pc
052.5316.--
DIN 7982
4.2 x 19

9 st./pc
057.5711.--
M5

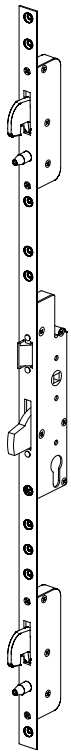

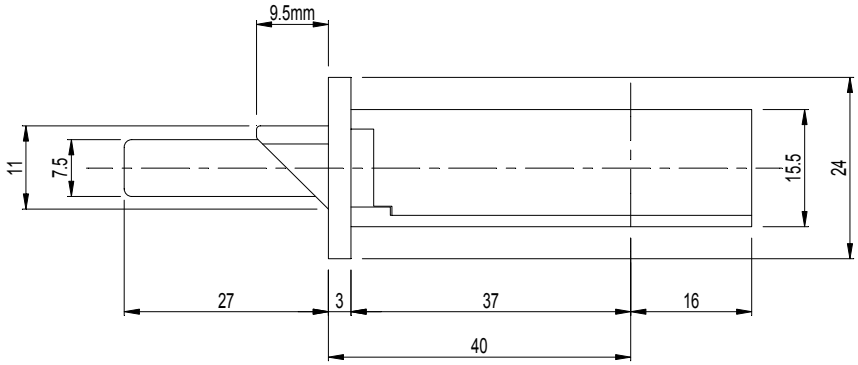

H=2370 B=24 D=73
AP = 050.5011.--/057.5711.--

U=43 X=92 Y=46 P=40

061.7456.ZC

5-PUNTSLUITING
FERMETURE A 5 POINTS
5-POINT LOCK
5-FACHVERRIEGELUNG

CS 68-AP
005.3026.XX
005.3014.XX

Eco system
Eco system-AP
CS 77-AP

CS 59
CS 68
CS 68-Re
CS 77
CS 77-Re

9 st./pc
050.5011.--
DIN 965
M5 x 20

9 st./pc
052.5316.--
DIN 7982
4.2 x 19

9 st./pc
057.5711.--
M5

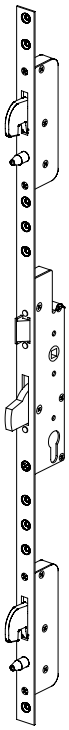

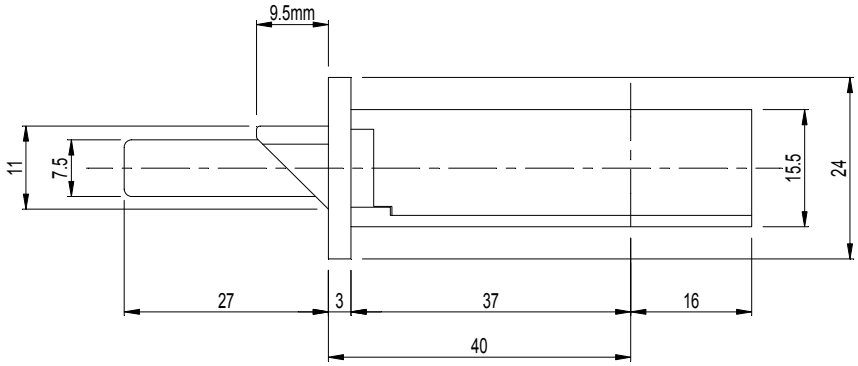

H=2170 B=24 D=73
STANDARD = 052.5316.--
AP = 050.5011.--/057.5711.--

U=43 X=92 Y=46 P=40

D0082286

CS 68-FP
EW 30

SLOTEN SOBINCO
SERRURES SOBINCO
LOCKS SOBINCO
SCHLOESSER SOBINCO

Reynaers Aluminium

061.7368.ZC

5-PUNTSLUITING
FERMETURE A 5 POINTS
5-POINT LOCK
5-FACHVERRIEGELUNG

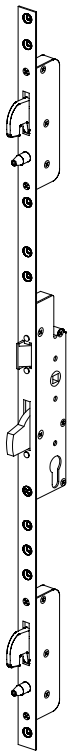

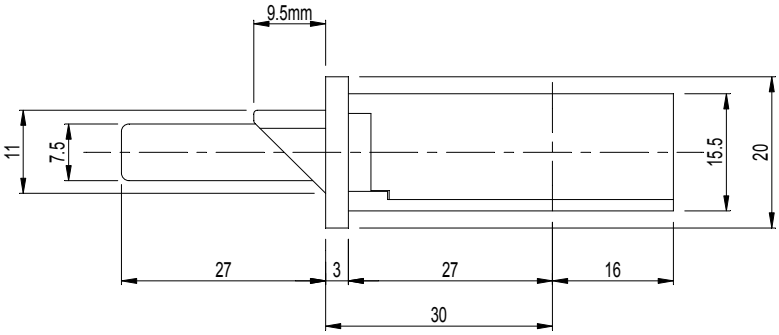

H=2370 B=20 D=73
STANDARD = 052.5316.--
AP = 050.5011.-- + 057.5711.--

U=43 X=92 Y=46 P=30

CS 68-AP
005.3026.XX.
005.3014.XX

Eco system
Eco system-AP
CS 77-AP

CS 59Pa
CS 59
CS 68
CS 77
CS 38-SL
CS 38-SL/AP

9 st./pc
050.5011.--
DIN 965
M5 x 20

9 st./pc
052.5316.--
DIN 7982
4.2 x 19

9 st./pc
057.5711.--
M5

D0082299

SLOTPADEN SOBINCO
GACHES SOBINCO
RECEIVERS SOBINCO
SCHLIESSBLECHE SOBINCO

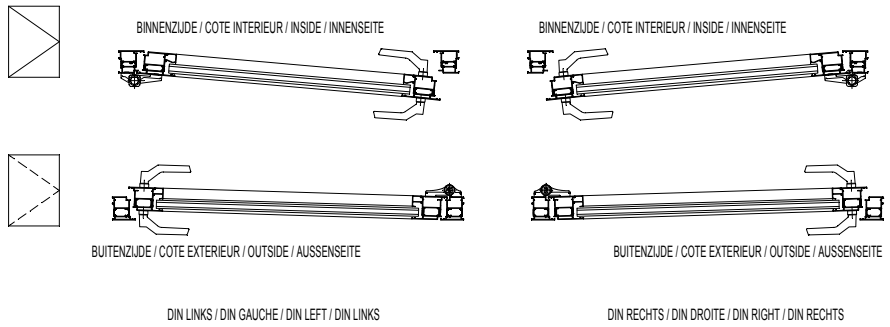

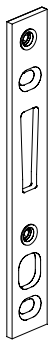

H=140
B=3
D=20

061.7698.--

ENKEL SLOTPAD
GACHE SIMPLE
SINGLE LOCK PLATE
EINZELNE SCHLIESSPLATTE

CS 59
CS 68
CS 77
Eco system
CS 38-SL

2 st./pc
052.5316.--
DIN 7982
4.2 x 19

H=230
B=3
D=20

061.7703.--

DUBBEL SLOTPAD
GACHE DOUBLE
DOUBLE RECEIVER
DOPPELTES SCHLIESSBLECH

CS 59
CS 68
CS 77
Eco system
CS 38-SL

3 st./pc
052.5316.--
DIN 7982
4.2 x 19

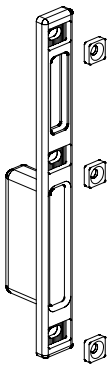

H=165

061.7707.--

DUBBEL SLOTPAD
GACHE DOUBLE
DOUBLE RECEIVER
DOPPELTES SCHLIESSBLECH

CS 59Pa
CS 59
CS 68
CS 77
Eco system

3 st./pc
052.5316.--
DIN 7982
4.2 x 19

D0082300

G

SLOTPADEN SOBINCO
GACHES SOBINCO
RECEIVERS SOBINCO
SCHLIESSBLECHE SOBINCO

Reynaers Aluminium

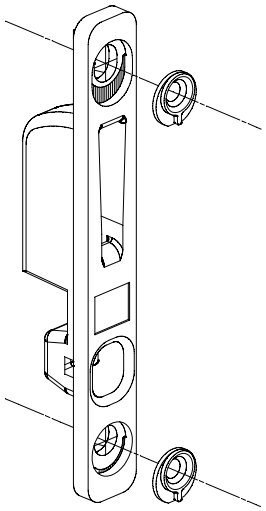

STANDARD = 052.5316.--
AP = 050.5011.--/057.5711.--

061.7699.--

ENKEL SLOTPAD
GACHE SIMPLE
SINGLE LOCK PLATE
EINZELNE SCHLIESSPLATTE

CS 59
CS 68
CS 77
CS 68-AP
CS 77-AP
Eco system
CS 38-SL
CS 86-HI
Eco system-AP
CS 38-SL/AP

2 st./pc
050.5011.--
DIN 965
M5 x 20

2 st./pc
052.5316.--
DIN 7982
4.2 x 19

2 st./pc
057.5711.--
M5

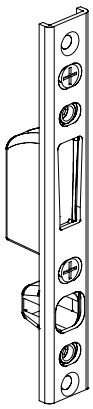

STANDARD = 052.5316.--
AP = 050.5011.--/057.5711.--

061.7704.--

DUBBEL SLOTPAD
GACHE DOUBLE
DOUBLE RECEIVER
DOPPELTES SCHLIESSBLECH

CS 59
CS 68
CS 77
CS 68-AP
CS 77-AP
Eco system
CS 38-SL
CS 86-HI
Eco system-AP
CS 38-SL/AP

3 st./pc
050.5011.--
DIN 965
M5 x 20

3 st./pc
052.5316.--
DIN 7982
4.2 x 19

3 st./pc
057.5711.--
M5

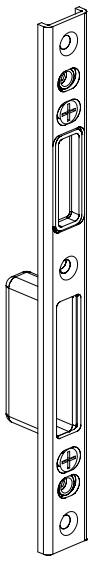

H=140

061.7708.--

ENKEL SLOTPAD
GACHE SIMPLE
SINGLE LOCK PLATE
EINZELNE SCHLIESSPLATTE

CS 59Pa
CS 59
CS 68
CS 77
Eco system

2 st./pc
052.5316.--
DIN 7982
4.2 x 19

D0082308

G

SLOTPADEN SOBINCO
GACHES SOBINCO
RECEIVERS SOBINCO
SCHLIESSBLECHE SOBINCO

Reynaers Aluminium

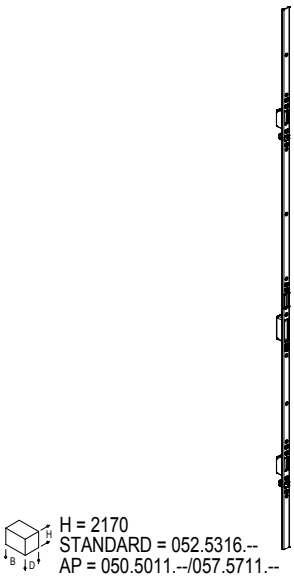

H = 2170
STANDARD = 052.5316.--
AP = 050.5011.--/057.5711.--

061.7705.--

SLOTPAD 2170MM
GACHE 2170MM
RECEIVER 2170MM
SCHLIESSBLECH 2170MM

CS 59
CS 68
CS 77
CS 68-AP
CS 77-AP
Eco system
CS 38-SL
CS 86-HI
Eco system-AP
CS 38-SL/AP

10 st./pc
050.5011.--
DIN 965
M5 x 20

10 st./pc
052.5316.--
DIN 7982
4.2 x 19

10 st./pc
057.5711.--
M5

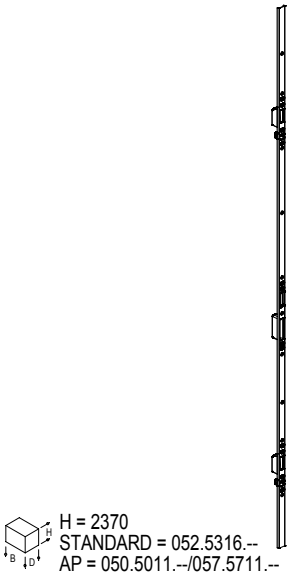

H = 2370
STANDARD = 052.5316.--
AP = 050.5011.--/057.5711.--

061.7706.--

SLOTPAD 2370MM
GACHE 2370MM
RECEIVER 2370MM
SCHLIESSBLECH 2370MM

CS 59
CS 68
CS 77
CS 68-AP
CS 77-AP
Eco system
CS 38-SL
CS 86-HI
Eco system-AP
CS 38-SL/AP

10 st./pc
050.5011.--
DIN 965
M5 x 20

10 st./pc
052.5316.--
DIN 7982
4.2 x 19

10 st./pc
057.5711.--
M5

D0082309

061.7302.ZC

SLOT DIN L
SERRURE DIN L
LOCK DIN L
HAKENSCHLOSS DIN L

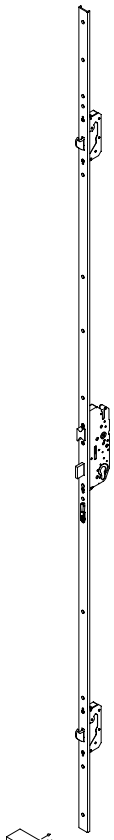

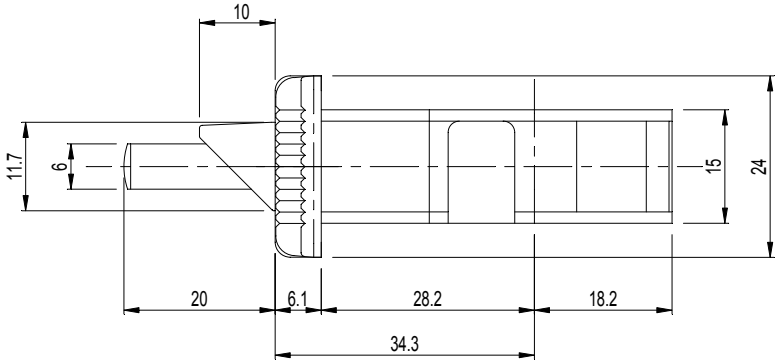

CS 68
005.0898.XX
005.1026.XX

005.0125.XX
005.1029.XX
005.1026.XX

005.0125.XX
005.0027.XX
005.1026.XX

005.0869.XX
005.1014.XX

005.0125.XX
005.0028.XX
005.1014.XX

Eco system
CS 59Pa
CS 59
CS 77
CS 77-FP
CS 77-SP

12 st./pc
052.5316.--
DIN 7982
4.2 x 19

AUTOMATIC LOCK (MECHANICAL OPERATION)
H=2170 B=24 D=73.3

V= 46 U=21.5 X=92 P=34.3

061.7303.ZC

SLOT DIN R
SERRURE DIN R
LOCK DIN R
HAKENSCHLOSS DIN R

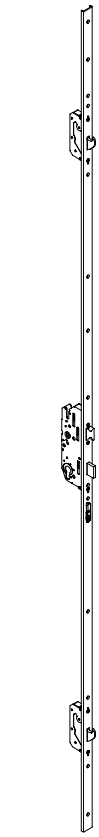

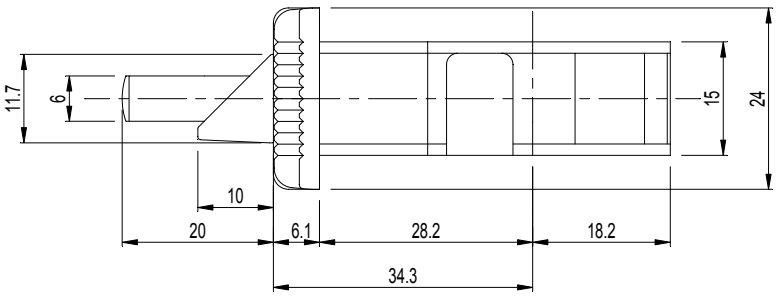

CS 68
005.0898.XX
005.1026.XX

005.0125.XX
005.1029.XX
005.1026.XX

005.0125.XX
005.0027.XX
005.1026.XX

005.0869.XX
005.1014.XX

005.0125.XX
005.0028.XX
005.1014.XX

Eco system
CS 59Pa
CS 59
CS 77
CS 77-FP
CS 77-SP

12 st./pc
052.5316.--
DIN 7982
4.2 x 19

H=2170
B=24
D=6.1

D0082312

 USE WITH 061.7302.ZC OR 061.7303.ZC H=1226 B=24 D=6.7	**061.7304.--** VERLENGSTUK SLOT DIN L RALLONGE SERRURE DIN L LOCK EXTENSION DIN L HAKENSCHLOSSVERLAENGERUNG DIN L	CS 59Pa CS 59 CS 68 CS 77 CS 77-FP Eco system CS 77-SP		7 st./pc 052.5316.-- DIN 7982 4.2 x 19
 USE WITH 061.7302.ZC OR 061.7303.ZC H=1226 B=24 D=6.7	**061.7305.--** VERLENGSTUK SLOT DIN R RALLONGE SERRURE DIN R LOCK EXTENSION DIN R HAKENSCHLOSSVERLAENGERUNG DIN R	CS 59Pa CS 59 CS 68 CS 77 CS 77-FP Eco system CS 77-SP		7 st./pc 052.5316.-- DIN 7982 4.2 x 19
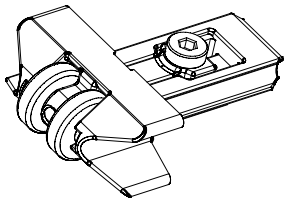 TO BE USED WITH WILKA LOCKS WITH A BACKSET OF 35	**061.7785.--** ROL ROULEAU ROLLER ROLLE	CS 59 CS 68 CS 77 Eco system		
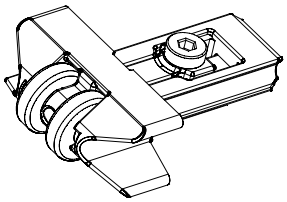 TO BE USED WITH WILKA LOCKS WITH A BACKSET OF 40	**061.7786.--** ROL ROULEAU ROLLER ROLLE	CS 59 CS 68 CS 77 Eco system		

D0082338

SLOTPADEN WILKA
GACHES WILKA
RECEIVERS WILKA
SCHLIESSBLECHE WILKA

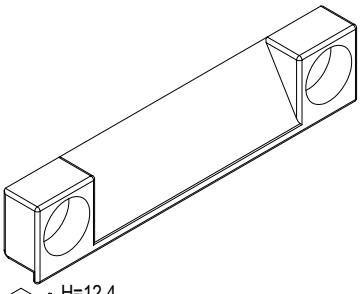 H=12.4 B=6.5 D=60	061.7684.04 OPVULLING SLOTPAD REMPLISSAGE GACHE PACKER RECEIVER HINTERFUELLUNG SCHLIESSBLECH	CS 59 CS 68		2 st./pc 052.5311.-- DIN 7982 4.2 x 16
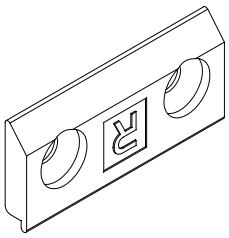 H=16.5 B=4 D=37	061.7714.04 OPVULLING SLOTPAD REMPLISSAGE GACHE PACKER RECEIVER HINTERFUELLUNG SCHLIESSBLECH	CS 68		
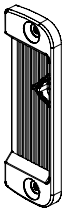 H=83 B=27 D=6.7	061.7723.-- STOOTPLAAT RECHTS PLAQUE DE GARDE DROITE STOP PLATE RIGHT STOSSPLATTE RECHTS	CS 68 005.0869.XX 005.0898.XX CS 59 CS 77 Eco system CS 77-FP CS 77-SP		2 st./pc 052.5316.-- DIN 7982 4.2 x 19
 H=83 B=27 D=6.7	061.7725.-- STOOTPLAAT LINKS PLAQUE DE GARDE GAUCHE STOP PLATE LEFT STOSSPLATTE LINKS	CS 68 005.0869.XX 005.0898.XX CS 59 CS 77 Eco system CS 77-FP CS 77-SP		2 st./pc 052.5316.-- DIN 7982 4.2 x 19
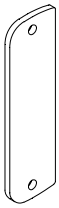 H=83 B=24 D=6.3	061.7726.-- ONDERVULLING SUPPORT SUPPORT FUELLSTUECK	CS 68 005.0869.XX 005.0898.XX CS 59 CS 77 Eco system CS 77-FP		

D0082345

G

ESPAGNOLETSLOT
FERMETURE ESPAGNOLETT
SHOOTBOLT ESPAGNOLETTE LOCK
TREIBRIEGELVERSCHLUSS

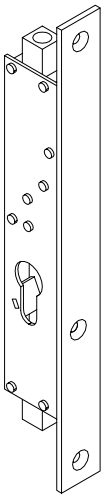

061.7991.ZC

ESPAGNOLETSLOT
FERMETURE ESPAGNOLETTE
ESPAGNOLETTE LOCK
TREIBRIEGELVERSCHLUSS

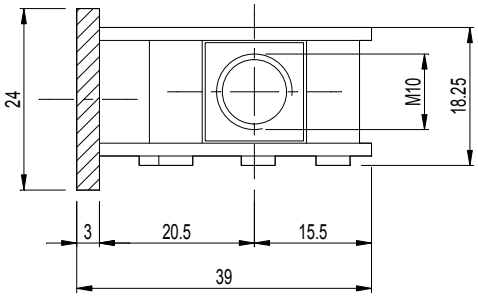

H=230
B=40
D=24

CS 68
005.1014.XX

005.1026.XX

CS 59Pa
CS 59
CS 77

Eco system

1 st./pc
050.5191.--
DIN 966
M6 x 45

2 st./pc
052.5316.--
DIN 7982
4.2 x 19

D0082354

KANTSCHUIF
VERROU DE CONDAMNATION
FLUSH BOLT
KANTRIEGEL

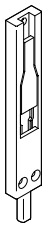 H=162 B=10 D=24	**061.7168.XX** KANTSCHUIF 140MM VERROU DE CONDAMNATION 140MM FLUSH BOLT 140MM KANTRIEGEL 140MM	CS 59Pa CS 59 CS 59-Re CS 59-So CS 68 CS 68-Re CS 68-So CS 77 Eco system CS 86-HI		3 st./pc 052.5311.-- DIN 7982 4.2 x 16
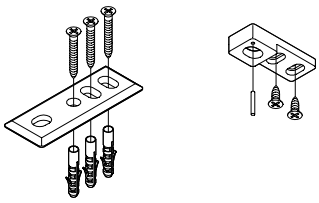	**061.7169.--** TOEBEHOREN KANTSCHUIF ACCESSOIRES VERROU DE CONDAMNATION ACCESSORIES FLUSH BOLT ZUBEHOER KANTRIEGEL	CS 59Pa CS 59 CS 59-Re CS 59-So CS 68 CS 68-Re CS 68-So CS 77 Eco system		
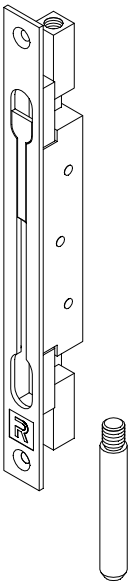 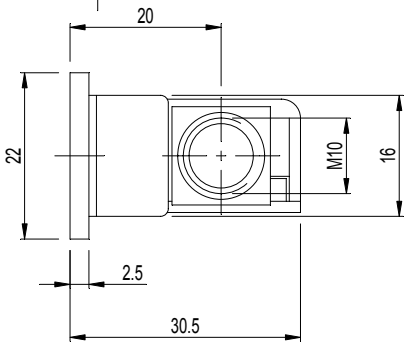	**061.7170.--** BASCULESCHUIF MET SLUITPIN VERROU A ENTAIL AVEC CHEVILLE FLUSH BOLT WITH PEG KANTRIEGEL MIT STANGE	CS 59Pa CS 59 CS 68 CS 77 CS 86-HI		2 st./pc 052.5312.-- DIN 7982 4.2 x 13
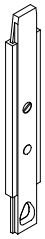 H=175 B=7.5 D=26	**061.7173.17** KANTSCHUIF 175MM VERROU DE CONDAMNATION 175MM FLUSH BOLT 175MM KANTRIEGEL 175MM	CS 59Pa CS 59 CS 59-Re CS 59-So CS 68 CS 68-Re CS 68-So CS 77		2 st./pc 052.5311.-- DIN 7982 4.2 x 16

D0082355

KANTSCHUIF
VERROU DE CONDAMNATION
FLUSH BOLT
KANTRIEGEL

 H=400 B=7.5 D=26	**061.7174.17** KANTSCHUIF 400MM VERROU DE CONDAMNATION 400MM FLUSH BOLT 400MM KANTRIEGEL 400MM	CS 59Pa CS 59 CS 59-Re CS 59-So CS 68 CS 68-Re CS 68-So CS 77		4 st./pc 052.5311.-- DIN 7982 4.2 x 16
 H=2500 D =Ø10	**061.7183.--** STANG 2500MM M10 BARRE 2500MM M10 BAR 2500MM M10 STANGE 2500MM M10	CS 59 CS 68 CS 77 Eco system		
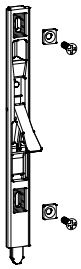 H=217 B=21 D=5	**061.7188.--** KANTSCHUIF VERROU DE CONDAMNATION FLUSH BOLT KANTRIEGEL	CS 59Pa CS 59 CS 59-Re CS 59-So CS 68 CS 68-Re CS 68-So CS 77 Eco system CS 38-SL		2 st./pc 050.5161.-- DIN 965 M5 x 16
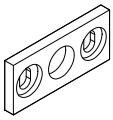 H=45 B=20 D=4	**061.7191.17** SLUITSTUK GACHE LOCK PLATE SCHLIESSSTUECK	CS 59Pa CS 59 CS 59-HV CS 59-Re CS 59-So CS 68 CS 68-HV CS 68-Re CS 68-So CS 77 CS 77-HV CS 77-BP CS 38-SL		2 st./pc 052.5317.-- DIN 7981 4.2 x 13
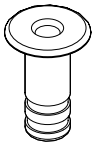 H=55 Ø38/20	**061.7192.--** BODEMBUS GACHE BASSE BOTTOM RECEIVER BODENBUCHSE	CS 59 CS 68 CS 77 Eco system		

D0082357

G

KANTSCHUIF
VERROU DE CONDAMNATION
FLUSH BOLT
KANTRIEGEL

061.7150.--

KANTSCHUIF 33MM M8
VERROU DE CONDAMNATION 33MM M8
FLUSH BOLT 33MM M8
KANTRIEGEL 33MM M8

CS 68
CS 77
Eco system
CS 86-HI
CS 77-SP

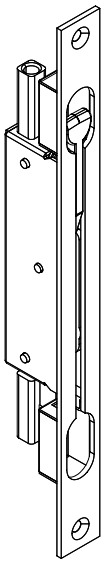

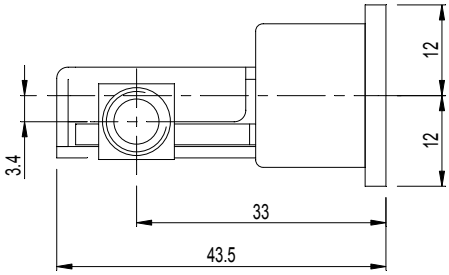

H=285
B=43.55
D=24

061.7151.--

KANTSCHUIF 59MM M8
VERROU DE CONDAMNATION 59MM M8
FLUSH BOLT 59MM M8
KANTRIEGEL 59MM M8

CS 68
CS 77
CS 86-HI

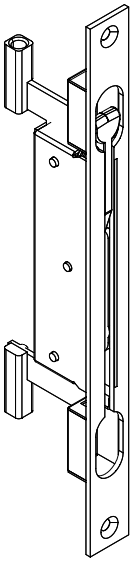

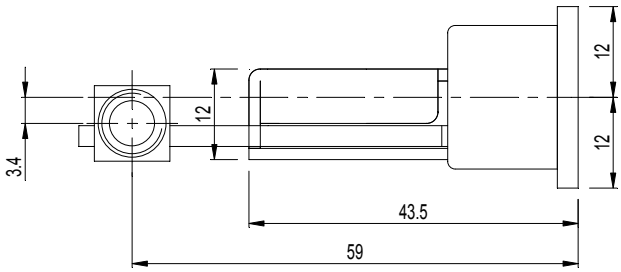

H=285
B=66
D=24

D0082359

G

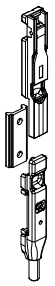	061.7194.-- KANTSCHUIF VERROU DE CONDAMNATION FLUSH BOLT KANTRIEGEL	CS 59-CD CS 59Pa-CD		
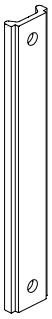 H=250 B=15 D=34	061.7196.17 VERLENGSTUK KANTSCHUIF RALLONGE VERROU LATCH EXTENSION RIEGELVERLAENGERUNG	CS 59-CD CS 59Pa-CD		
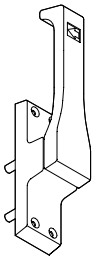 H=305 B=79 D=42	061.7198.-- SLUITING DUBBELE DEUR LINKS M10 VERROUILLAGE PORTE DOUBLE GAUCHE M10 CLOSURE DOUBLE DOOR LEFT M10 VERSCHLUSS DOPPELTUER LINKS M10	CS 59 CS 68 CS 77 Eco system		4 st./pc 050.5011.-- DIN 965 M5 x 20
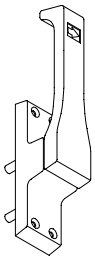 H=305 B=79 D=42	061.7199.-- SLUITING DUBBELE DEUR RECHTS M10 VERROUILLAGE PORTE DOUBLE DROITE M10 CLOSURE DOUBLE DOOR RIGHT M10 VERSCHLUSS DOPPELTUER RECHTS M10	CS 59 CS 68 CS 77 Eco system		4 st./pc 050.5011.-- DIN 965 M5 x 20
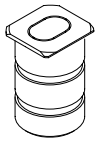 H=36.5 B=23 D=23	061.7200.-- BODEMBUS GACHE BASSE BOTTOM RECEIVER BODENBUCHSE	CS 59Pa CS 59 CS 59-Re CS 59-So CS 68 CS 68-Re CS 68-So CS 77 Eco system CS 38-SL CS 86-HI Eco system-AP CS 38-SL/AP	CS 77-SP	

D0082361

EXTRA TOEBEHOREN VOOR SLOTEN
EXTRA ACCESSOIRES POUR SERRURES
EXTRA ACCESSORIES FOR LOCKS
EXTRA ZUBEHOER FUR SCHLOESSER

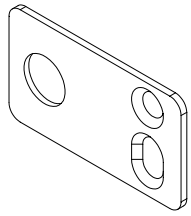 H=26 B=47 D=1.5	061.7152.-- GELEIDINGSPLAAT STANG GUIDE TIGE GUIDE PLATE BAR FUEHRUNG STANGE	CS 68 CS 77 Eco system CS 86-HI CS 77-SP			
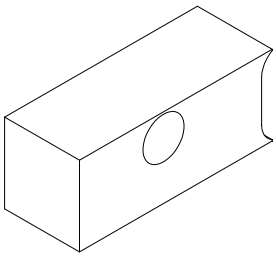 H=20 B=21.2 D=51.5	061.7153.01 GELEIDINGSBLOK 20MM BLOC DE GUIDAGE 20MM GUIDE BLOCK 20MM FUEHRUNGSBLOCK 20MM	CS 68 CS 77 CS 86-HI CS 77-SP			
 H=57 D=Ø 10	061.7154.-- EINDSTUK SLUITSTANG PIECE FINALE TIGE DE FERMETURE END PIECE LOCK BAR ENDSTUECK VERSCHLUSSSTANGE	CS 68 CS 77 CS 86-HI CS 77-SP			

D0082363

EXTRA TOEBEHOREN VOOR SLOTEN
EXTRA ACCESSOIRES POUR SERRURES
EXTRA ACCESSORIES FOR LOCKS
EXTRA ZUBEHOER FUR SCHLOESSER

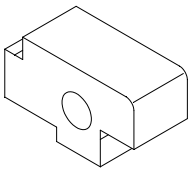 H=27.45 B=48.3 D=20	069.7985.01 GELEIDINGSPLAAT STANG GUIDE TIGE GUIDE PLATE BAR FUEHRUNG STANGE	CS 59 CS 77 CS 77-BP CS 68 Eco system		
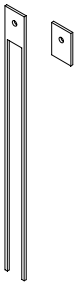 H=285 B=24 D=2.5	069.7986.-- ONDERVULLING SLOTEN BKS SUPPORT SERRURES BKS SUPPORT LOCKS BKS FUELLSTUECK SCHLOESSER BKS	CS 59 CS 68 CS 77		
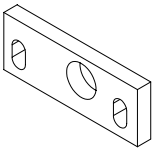 use 052.5311.-- for CS 86-HI H=18.5 B=50 D=5	069.7988.01 GELEIDINGSPLAAT STANG GUIDE TIGE GUIDE PLATE BAR FUEHRUNG STANGE	CS 59 CS 77 CS 77-BP CS 68		2 st./pc 052.5310.-- DIN 7981 4.2 x 16

D0082367

G

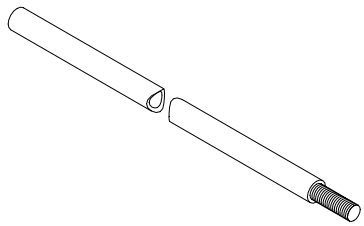 Ø8/10 B=1215	061.7155.-- STANG 1195MM M8x45 BARRE 1195MM M8x45 BAR 1195MM M8x45 STANGE 1195MM M8x45	Eco system CS 86-HI CS 77-SP		
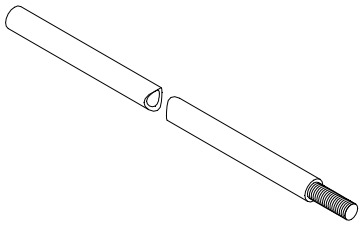 Ø8/10 B=1540	061.7156.-- STANG 1520MM M8x45 BARRE 1520MM M8x45 BAR 1520MM M8x45 STANGE 1520MM M8x45	Eco system CS 86-HI CS 77-SP		
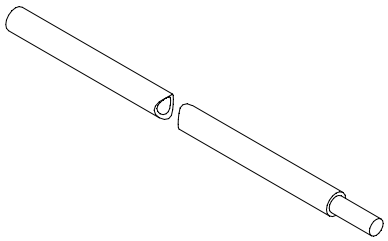 Ø10/12 B=1015	061.7995.00 STANG 995MM M10x45 BARRE 995MM M10x45 BAR 995MM M10x45 STANGE 995MM M10x45	CS 59Pa CS 59 CS 68 CS 77 Eco system CS 77-SP		
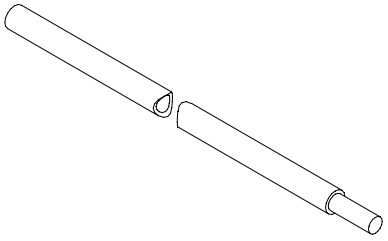 Ø10/12 B=1515	061.7996.00 STANG 1495MM M10x45 BARRE 1495MM M10x45 BAR 1495MM M10x45 STANGE 1495MM M10x45	CS 59Pa CS 59 CS 68 CS 77 Eco system CS 77-SP		

D0082368

EXTRA TOEBEHOREN VOOR SLOTEN
EXTRA ACCESSOIRES POUR SERRURES
EXTRA ACCESSORIES FOR LOCKS
EXTRA ZUBEHOER FUR SCHLOESSER

	061.7997.-- EINDSTUK SLUITSTANG PIECE FINALE TIGE DE FERMETURE END PIECE LOCK BAR ENDSTUECK VERSCHLUSSSTANGE	CS 59Pa CS 59 CS 68 CS 77 Eco system		
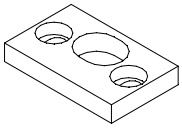 H=8 B=40 D=25	061.7998.00 GELEIDINGSPLAAT PLAQUE DE GUIDAGE CONDUCTION-PIECE FUEHRUNGSPLATTE	CS 59Pa CS 59 CS 68 CS 77 Eco system		2 st./pc 050.5130.-- 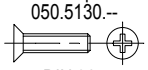 DIN 965 M5 x 10
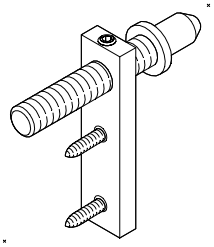	061.8724.00 VEILIGHEIDSPIN GOUPILLE DE SECURITE SAFETY PIN SICHERUNGSDORN MIT KRAGEN	CS 59Pa CS 59 CS 68 CS 77		
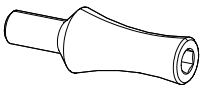 FOR USE ON 065.6510.XX	061.8725.00 VEILIGHEIDSPIN GOUPILLE DE SECURITE SAFETY PIN SICHERUNGSDORN MIT KRAGEN	CS 59Pa CS 59 CS 59-HV CS 59-Re CS 59-So CS 68 CS 68-HV CS 68-Re CS 68-So CS 77 CS 77-HV CS 77-BP Eco system		

D0082366

061.6455.--

TEMPERATUURPEN
GOUPILLE DE TEMPERATURE
TEMPERATURE PEN
TEMPERATURSTIFT

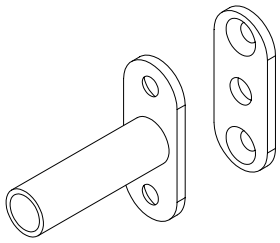

CS 68-FP

H= 50
B= 20
D= 72

061.7642.--

BORGBOUT
BOULON DE BLOCAGE
SAFETY BOLT
SICHERUNGSBOLZEN

4 st./pc
052.5316.--

DIN 7982
4.2 x 19

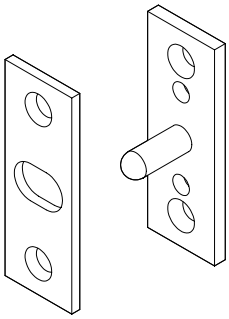

CS 68-FP
CS 77-FP

D0082499

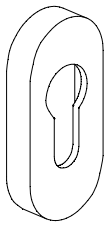 H=66 B=10 D=31	061.6968.XX CILINDERPLAAT ECUSSON CYLINDER COVER PZ-ROZETTE	CS 59 CS 68 CS 77 Eco system CS 38-SL CS 86-HI		2 st./pc 050.5161.-- DIN 965 M5 x 16
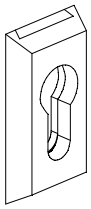 CP 130-AP -->2X057.5711.--/2X050.5015.-- H=62 B=9 D=31	061.6969.XX CILINDERPLAAT ECUSSON CYLINDER COVER PZ - ROSETTE	CS 59Pa CS 59 CS 59-Re CS 59-So CS 68 CS 68-Re CS 68-So CP 130 CS 77 CS 59Pa-AP CS 59-AP CS 68-AP CS 77-AP		2 st./pc 052.5311.-- DIN 7982 4.2 x 16 2 st./pc 057.5711.-- M5
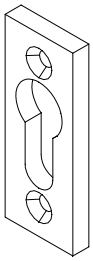 H=66.5 B=27 D=7	061.6970.XX CILINDERPLAAT ECUSSON CYLINDER COVER PZ - ROSETTE	CS 59Pa CS 59 CS 59-Re CS 59-So CS 68 CS 68-Re CS 68-So CS 77 CS 77-BP Eco system Eco system-AP		2 st./pc 052.5311.-- 2 st./pc 050.5015.-- DIN 965 M5 x 8 DIN 7982 4.2 x 16
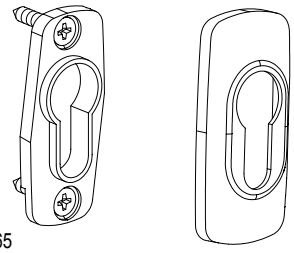 H=65 B=30 D=10	061.6976.XX CILINDERPLAAT ECUSSON CYLINDER COVER PZ - ROSETTE	CS 59Pa CS 59 CS 59-Re CS 59-So CS 68 CS 68-Re CS 68-So CS 77 Eco system CS 38-SL Eco system-AP		2 st./pc 052.5311.-- DIN 7982 4.2 x 16

D0082369

G

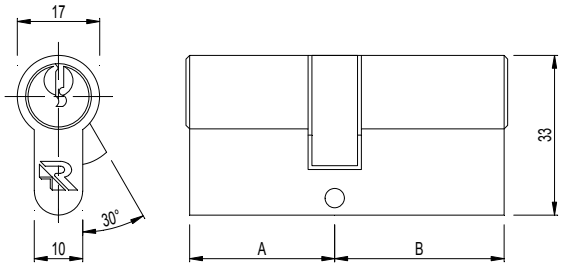

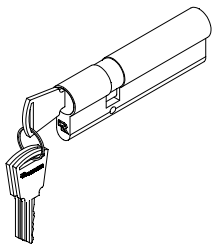

A=30
B=65

061.7025.--

CILINDER 95MM A=30 B=65
CYLINDRE 95MM A=30 B=65
CYLINDER 95MM A=30 B=65
ZYLINDER 95MM A=30 B=65

CS 77

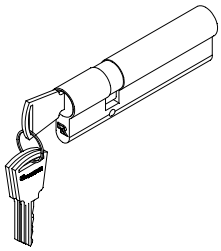

A=30
B=70

061.7026.--

CILINDER 100MM A=30 B=70
CYLINDRE 100MM A=30 B=70
CYLINDER 100MM A=30 B=70
ZYLINDER 100MM A=30 B=70

CS 77
CS 38-SL/AP

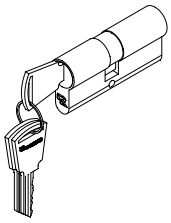

A=30
B=35

061.7035.--

CILINDER 65MM A=30 B=35
CYLINDRE 65MM A=30 B=35
CYLINDER 65MM A=30 B=35
ZYLINDER 65MM A=30 B=35

CS 59Pa
CS 59

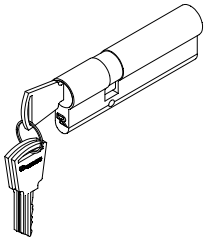

A=30
B=60

061.7037.--

CILINDER 90MM A=30 B=60
CYLINDRE 90MM A=30 B=60
CYLINDER 90MM A=30 B=60
ZYLINDER 90MM A=30 B=60

CS 59
CS 68
CS 77
CP 45Pa
CS 38-SL

D0082372

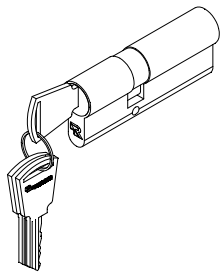 A=30 B=45	**061.7039.--** CILINDER 75MM A=30 B=45 CYLINDRE 75MM A=30 B=45 CYLINDER 75MM A=30 B=45 ZYLINDER 75MM A=30 B=45	CS 59Pa CS 59 CS 68 CS 77	
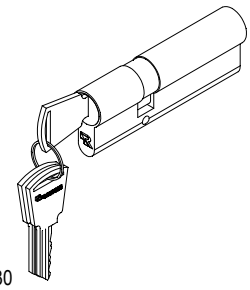 A=30 B=55	**061.7040.--** CILINDER 85MM A=30 B=55 CYLINDRE 85MM A=30 B=55 CYLINDER 85MM A=30 B=55 ZYLINDER 85MM A=30 B=55	CS 59Pa CS 59 CS 68 CS 77 Eco system-AP	
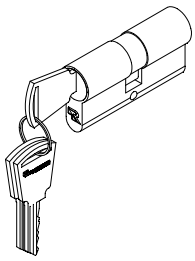 A=30 B=30	**061.7042.--** CILINDER 60MM A=30 B=30 CYLINDRE 60MM A=30 B=30 CYLINDER 60MM A=30 B=30 ZYLINDER 60MM A=30 B=30	VISION 50 CS 59Pa CS 59 CS 68 CS 77 CP 96 Eco system Eco system-AP	
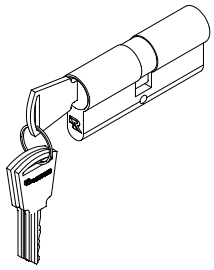 A=30 B=35 LS 150kg + LS 300kg	**061.7043.--** CILINDER 70MM A=35 B=35 CYLINDRE 70MM A=35 B=35 CYLINDER 70MM A=35 B=35 ZYLINDER 70MM A=35 B=35	CS 59Pa CS 59 CS 68 CS 77 CP 96 CP 96-LS CP 96-AP CP 96-LS/AP CD 50	
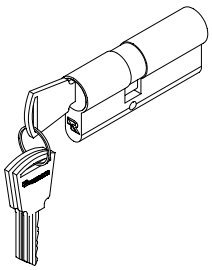 H=33 B=17 D=70	**061.7044.--** CILINDER 70MM A=30 B=40 CYLINDRE 70MM A=30 B=40 CYLINDER 70MM A=30 B=40 ZYLINDER 70MM A=30 B=40	CS 59Pa CS 59 CS 68 CP 155 CP 155-LS CS 77 Eco system	

D0082375

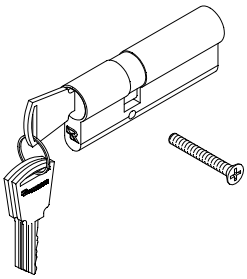

A=30
B=50

061.7045.--

CILINDER 80MM A=30 B=50
CYLINDRE 80MM A=30 B=50
CYLINDER 80MM A=30 B=50
ZYLINDER 80MM A=30 B=50

CS 59Pa
CS 59
CS 68
CS 77
CS 77-FP
CS 77-SP

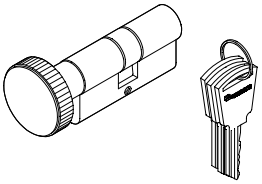

A=30
B=30

061.7046.--

CILINDER 60MM A=30 B=30
CYLINDRE 60MM A=30 B=30
CYLINDER 60MM A=30 B=30
ZYLINDER 60MM A=30 B=30

VISION 50

CS 59Pa
CS 59
CS 68
CS 77

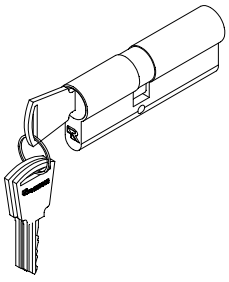

H=33
B=17
D=80

061.7047.--

CILINDER 80MM A=35 B=45
CYLINDRE 80MM A=35 B=45
CYLINDER 80MM A=35 B=45
ZYLINDER 80MM A=35 B=45

CS 59Pa
CS 59
CS 68
TP 110
TP 138
TLS 110
CP 130
CP 130-LS
CS 77
TP 110-Re

D0082381

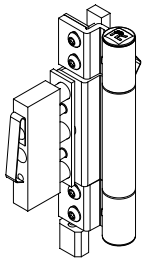	065.6385.XX DEURSCHARNIER CHARNIERE PORTE DOOR HINGE TUERBAND	CS 68 005.0125.XX 005.1028.XX 005.3014.XX 005.1869.XX 005.3014.XX	
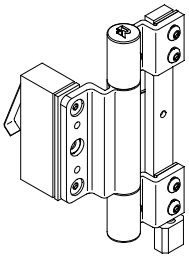	065.6391.XX DEURSCHARNIER CHARNIERE PORTE DOOR HINGE TUERBAND	CS 68 005.1898.XX 005.3026.XX CS 86-HI CS 77 CS 77-SP	
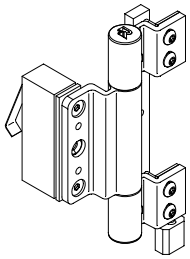	065.6394.XX DEURSCHARNIER CHARNIERE PORTE DOOR HINGE TUERBAND	CS 68 005.1025.XX 005.1029.XX 005.3026.XX CS 86-HI CS 77 CS 77-SP	
 ROLLENBAND COVER 065.6385.XX -> 065.6397.XX	065.6395.-- HULS DOUILLE CASE HUELSE INOX	CS 68 CS 77 CS 86-HI CS 77-SP	

D0082382

CS 68-FP
EW 30

DEURSCHARNIER
CHARNIERE PORTE
DOOR HINGE
TUERBAND

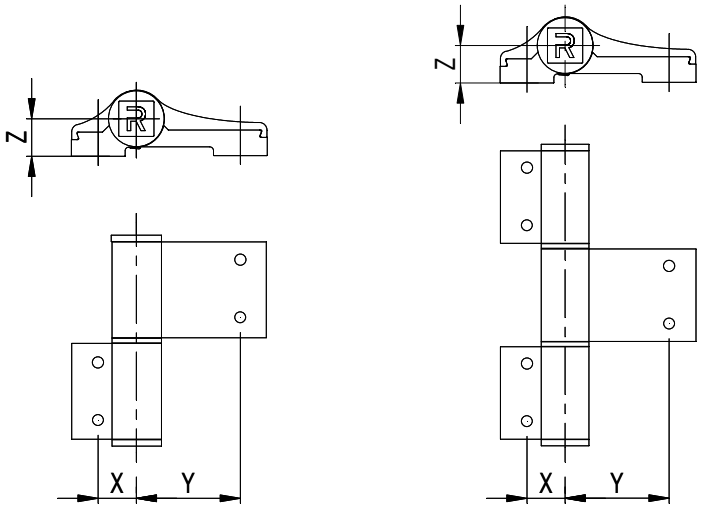

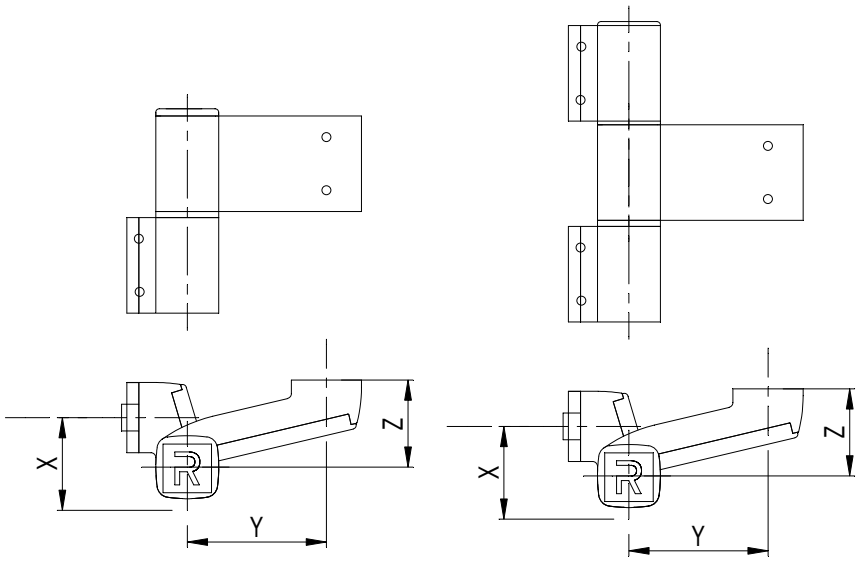

D0082390

G

065.6656.XX

DEURSCHARNIER DR HAHN TUERBAND4 76.5MM
CHARNIERE PORTE DR HAHN TUERBAND4 76.5MM
DOOR HINGE DR HAHN TUERBAND4 76.5MM
TUERBAND DR HAHN TUERBAND4 76.5MM

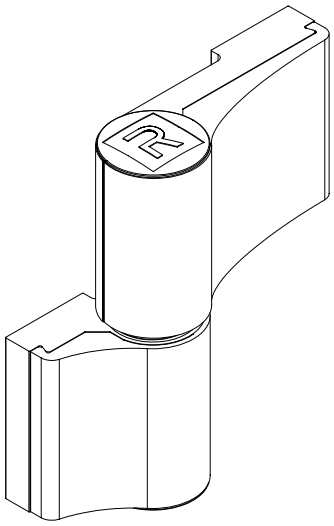

CS 68
008.1898.XX
005.3026.XX

005.0125.XX
005.1029.XX
005.3026.XX

005.1869.XX
005.3014.XX

Eco system
Eco system-AP
CS 59
CS 59Pa
CS 77
CS 86-HI

CS 104

TÜRBAND IV
X=20.5 Y=56 Z=20
ANCHORS NOT INCLUDED:SEE SYST. CAT. CS

065.6683.XX

DEURSCHARNIER 2-DELIG
CHARNIERE PORTE 2-PARTIES
DOOR HINGE 2-PART
TUERBAND 2-TEILIG

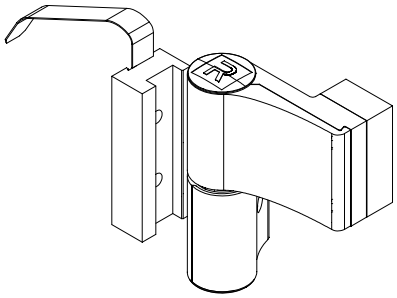

CS 68
005.1100.XX
005.1028.XX
005.3014.XX

005.1109.XX
005.1028.XX
005.3014.XX

005.1110.XX
005.1028.XX
005.3014.XX

CS 59
CS 77
CS 86-HI

Eco system-AP

TÜRBAND IV
X=20.5 Y=56 Z=36
ANCHORS NOT INCLUDED:SEE SYST. CAT. CS

D0082393

065.6684.XX

DEURSCHARNIER 3-DELIG
CHARNIERE PORTE 3-PARTIES
DOOR HINGE 3-PART
TUERBAND 3-TEILIG

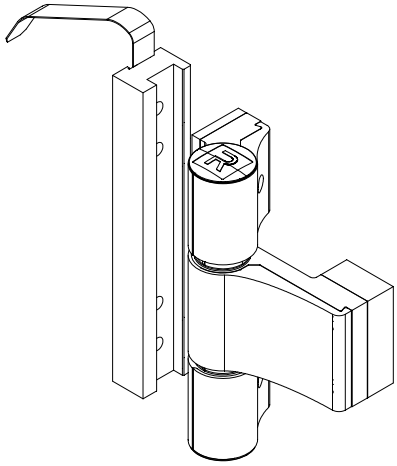

CS 68	
005.1100.XX	
005.1028.XX	
005.3014.XX	
005.1109.XX	
005.1028.XX	
005.3014.XX	
005.1110.XX	
005.1028.XX	
005.3014.XX	
CS 59	
CS 77	
CS 86-HI	
Eco system-AP	

TÜRBAND IV
X=20.5 Y=56 Z=36
ANCHORS NOT INCLUDED:SEE SYST. CAT. CS

065.6688.XX

DEURSCHARNIER DR.HAHN TUERBAND4 76.5/20
CHARNIERE PORTE DR.HAHN TUERBAND4 76.5/20
DOOR HINGE DR.HAHN TUERBAND4 76.5/20
TUERBAND DR.HAHN TUERBAND4 76.5/20

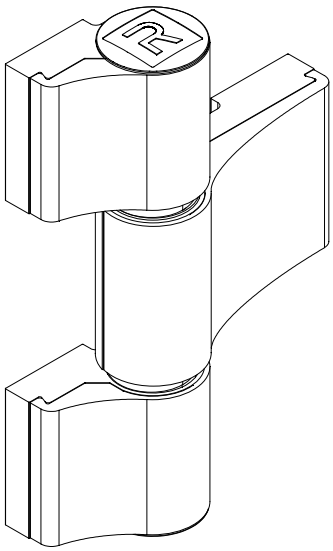

CS 68	005.3026.XX
005.1898.XX	
005.3026.XX	Eco system
	CS 59
005.0125.XX	CS 77
005.1029.XX	CS 86-HI
005.3026.XX	Eco system-AP
	CS 77-AP
005.1869.XX	CS 77-SP
005.3014.XX	
	CS 77-FP
CS 68-AP	CS 104
005.1898.XX	
005.3026.XX	
005.1869.XX	
005.3014.XX	
005.0125.XX	
005.2029.XX	

TÜRBAND IV
X=20.5 Y=56 Z=20
ANCHORS NOT INCLUDED:SEE SYST. CAT. CS

D0082396

065.6689.XX

DEURSCHARNIER DR.HAHN TUERBAND4 103MM
CHARNIERE PORTE DR.HAHN TUERBAND4 103MM
DOOR HINGE DR.HAHN TUERBAND4 103MM
TUERBAND DR.HAHN TUERBAND4 103MM

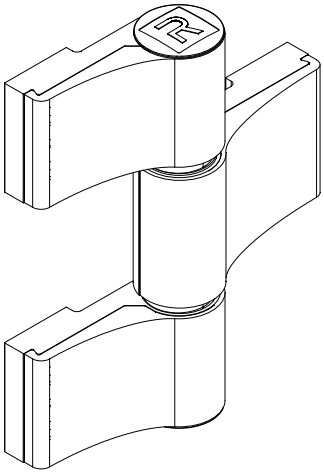

CS 68	Eco system-AP
005.0125.XX	CS 77-SP
005.1028.XX	
005.3014.XX	CS 59-AP
	CS 68-AP
005.3125.XX	CS 77-AP
005.2027.XX	
005.3026.XX	
CS 68-FP	
005.0925.XX	
005.0928.XX	
005.0914.XX	
Eco system	
CS 86-HI	
CS 77	
CS 59	
CS 59Pa	

TÜRBAND IV
X=47 Y=56 Z=20
ANCHORS NOT INCLUDED:SEE SYST. CAT. CS

065.6714.XX

DEURSCHARNIER 103/20
CHARNIERE PORTE 103/20
DOOR HINGE 103/20
TUERBAND 103/20

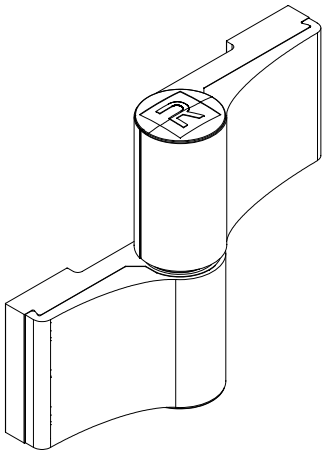

CS 68	CS 86-HI
005.0125.XX	Eco system-AP
005.1028.XX	
005.3014.XX	CS 77-AP
	Eco system Optima-AP
005.0125.XX	
005.1027.XX	
005.3026.XX	
CS 68-AP	
005.0125.XX	
005.1028.XX	
005.3014.XX	
PS 50-SP	
Eco system	
CS 77	
CS 59	
CS 59Pa	

TÜRBAND IV
X=47 Y=56 Z=20.2
ANCHORS NOT INCLUDED:SEE SYST. CAT. CS

D0082399

065.6380.XX

DEURSCHARNIER DR.HAHN 65mm
CHARNIERE PORTE DR.HAHN 65mm
DOOR HINGE DR.HAHN 65mm
TUERBAND DR.HAHN 65mm

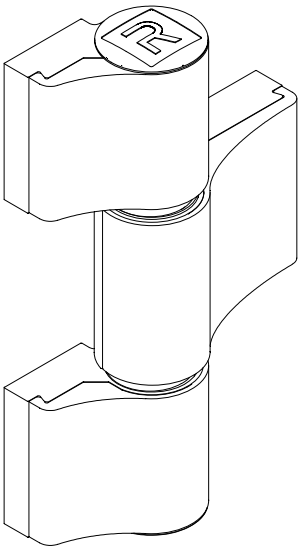

CS 68					
005.1898.XX					
005.3026.XX					
005.0125.XX					
005.1029.XX					
005.3026.XX					
005.1869.XX					
005.3014.XX					
CS 77-FP					
CS 59					
CS 77					
CS 86-HI					
CS 77-SP					
CS 68-FP					
CS 68-FP/PD					

TÜRBAND IV
X=20.5 Y=44.5 Z=20
ANCHORS NOT INCLUDED: SEE SYST. CAT. CS

065.6381.XX

DEURSCHARNIER DR.HAHN 91.5mm
CHARNIERE PORTE DR.HAHN 91.5mm
DOOR HINGE DR.HAHN 91.5mm
TUERBAND DR.HAHN 91.5mm

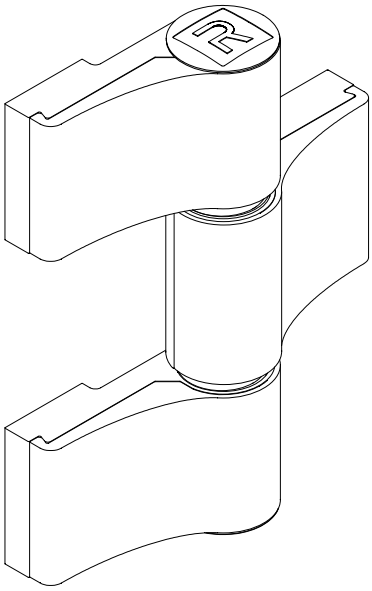

CS 68					
005.0125.XX	CS 68-FP/PD				
005.1028.XX					
005.3014.XX					
005.3125.XX					
005.2027.XX					
005.3026.XX					
CS 68-FP					
005.0925.XX					
005.0928.XX					
005.0914.XX					
CS 77-FP					
CS 59					
CS 77					
CS 86-HI					
CS 77-SP					

TÜRBAND IV
X=47 Y=44.5 Z=20
ANCHORS NOT INCLUDED: SEE SYST. CAT. CS

D0082401

065.6612.XX

DEURSCHARNIER 3-DELIG
CHARNIERE PORTE 3-PARTIES
DOOR HINGE 3-PART
TUERBAND 3-TEILIG

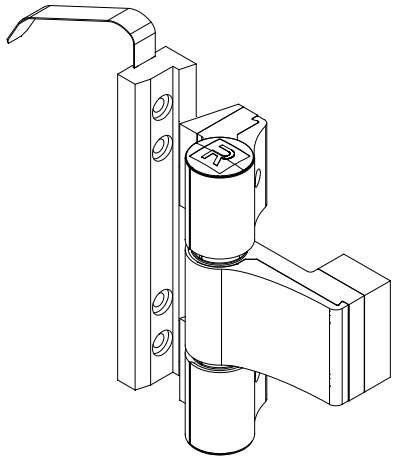

CS 68	
005.0448.XX	CS 59
005.1028.XX	CS 77
005.3014.XX	
	Eco system
005.0452.XX	Eco system-AP
005.1028.XX	
005.3014.XX	
005.1456.XX	
005.1028.XX	
005.3014.XX	
005.1449.XX	
005.1028.XX	
005.3014.XX	
005.1455.XX	
005.1028.XX	
005.3014.XX	

TÜRBAND IV
X=20.5 Y=56 Z=36
ANCHORS NOT INCLUDED: SEE SYST. CAT. CS

065.6744.XX

DEURSCHARNIER 3-DELIG DR HAHN TUERBAND4 83MM
CHARNIERE PORTE 3-PARTIES DR HAHN TUERBAND4 8
DOOR HINGE 3-PART DR HAHN TUERBAND4 83MM
TUERBAND 3-TEILIG DR HAHN TUERBAND4 83MM

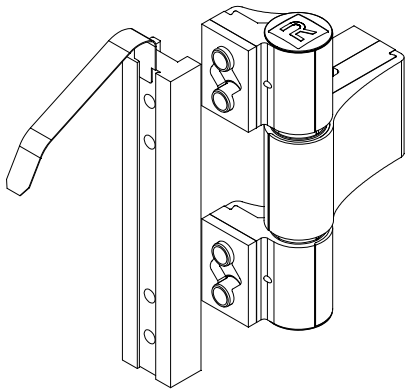

CS 68	
005.1100.XX	
005.1028.XX	
005.3014.XX	
005.1109.XX	
005.1028.XX	
005.3014.XX	
005.1110.XX	
005.1028.XX	
005.3014.XX	
CS 77	
CS 86-HI	
CS 59	
Eco system	
Eco system-AP	

TÜRBAND IV
X=20.5 Y=56 Z=36
ANCHORS NOT INCLUDE: SEE SYST. CAT. CS

D0082405

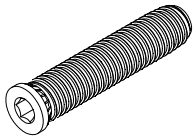 TÜRBAND IV Ø11 D=58 STAINLESS STEEL	065.6600.-- ANKERSCHROEF 58MM VIS D'ANCRAGE DIRECT 58MM ANCHOR SCREW 58MM ANKER-SCHRAUBE 58MM	CS 59 CS 68 CS 77 CS 77-FP Eco system CS 86-HI Eco system-AP CS 104 CS 77-SP		
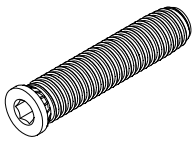 TÜRBAND IV Ø11 D=48 STAINLESS STEEL	065.6601.-- ANKERSCHROEF 48MM VIS D'ANCRAGE DIRECT 48MM ANCHOR SCREW 48MM ANKER-SCHRAUBE 48MM	CS 59 CS 68 CS 77 CS 77-FP Eco system CS 86-HI Eco system-AP CS 104 CS 77-SP		
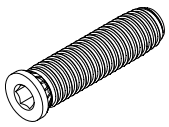 TÜRBAND IV Ø11 D=48 CHROMATED STEEL	065.6610.-- ANKERSCHROEF 48MM VIS D'ANCRAGE DIRECT 48MM ANCHOR SCREW 48MM ANKER-SCHRAUBE 48MM	CS 59 CS 68 CS 77 Eco system CS 86-HI Eco system-AP CS 77-SP		
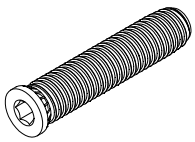 TÜRBAND IV Ø11 D=58 CHROMATED STEEL	065.6611.-- ANKERSCHROEF 58MM VIS D'ANCRAGE DIRECT 58MM ANCHOR SCREW 58MM ANKER-SCHRAUBE 58MM	CS 59 CS 68 CS 77 Eco system CS 86-HI Eco system-AP CS 77-SP		

D0082415

065.6804.XX

DEURSCHARNIER 82.5MM
CHARNIERE PORTE 82.5MM
DOOR HINGE 82.5MM
TUERBAND 82.5MM

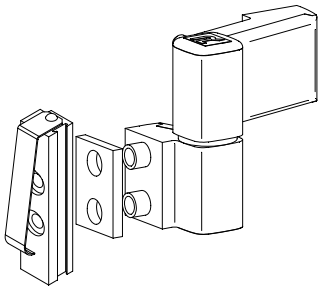

CS 68
005.1100.XX
005.1028.XX
005.3014.XX

005.1109.XX
005.1028.XX
005.3014.XX

005.1110.XX
005.1028.XX
005.3014.XX

CS 59
CS 77
CS 86-HI

SERIE 60 AT
X=20.5 Y=57.5 Z=36
ANCHORS NOT INCLUDED: SEE SYST. CAT. CS

065.6805.XX

DEURSCHARNIER 82.5MM
CHARNIERE PORTE 82.5MM
DOOR HINGE 82.5MM
TUERBAND 82.5MM

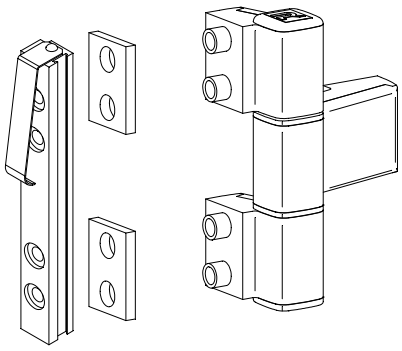

CS 68
005.1100.XX
005.1028.XX
005.3014.XX

005.1109.XX
005.1028.XX
005.3014.XX

005.1110.XX
005.1028.XX
005.3014.XX

CS 59
CS 77
CS 86-HI
CS 77-SP

SERIE 60 AT
X=20.5 Y=75.5 Z=36
ANCHORS NOT INCLUDED: SEE SYST. CAT. CS

D0082419

065.6812.XX

DEURSCHARNIER 78MM
CHARNIERE PORTE 78MM
DOOR HINGE 78MM
TUERBAND 78MM

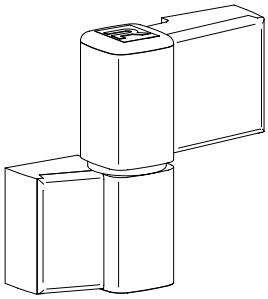

CS 68
005.1898.XX
005.3026.XX

005.0125.XX
005.1029.XX
005.3026.XX

005.1869.XX
005.3014.XX

CS 59
CS 77
CS 59Pa
Eco system
Eco system-AP
CS 86-HI

SERIE 60 AT
X=20.5 Y=57.5 Z=20
ANCHORS NOT INCLUDED: SEE SYST. CAT. CS

065.6813.XX

DEURSCHARNIER 78MM
CHARNIERE PORTE 78MM
DOOR HINGE 78MM
TUERBAND 78MM

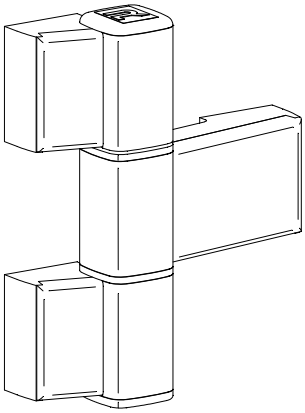

CS 68
005.1898.XX
005.3026.XX

005.0125.XX
005.1029.XX
005.3026.XX

005.1869.XX
005.3014.XX

CS 59
CS 77
CS 59Pa
Eco system
Eco system-AP
CS 86-HI
CS 77-SP

SERIE 60 AT
X=20.5 Y=57.5 Z=20
ANCHORS NOT INCLUDED: SEE SYST. CAT. CS

D0082423

065.6816.XX

DEURSCHARNIER 104.5MM
CHARNIERE PORTE 104.5MM
DOOR HINGE 104.5MM
TUERBAND 104.5MM

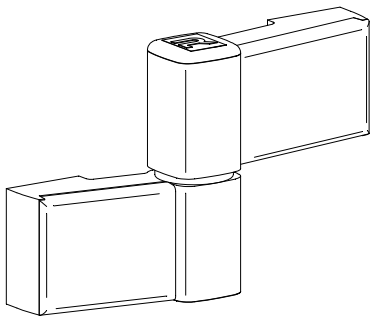

CS 68
005.0125.XX
005.2027.XX
005.3026.XX

005.0125.XX
005.1028.XX
005.3014.XX

CS 59
CS 77
CS 59Pa
Eco system
Eco system-AP
CS 86-HI

SERIE 60 AT
X=47 Y=57.5 Z=20
ANCHORS NOT INCLUDED: SEE SYST. CAT. CS

065.6817.XX

DEURSCHARNIER 104.5MM
CHARNIERE PORTE 104.5MM
DOOR HINGE 104.5MM
TUERBAND 104.5MM

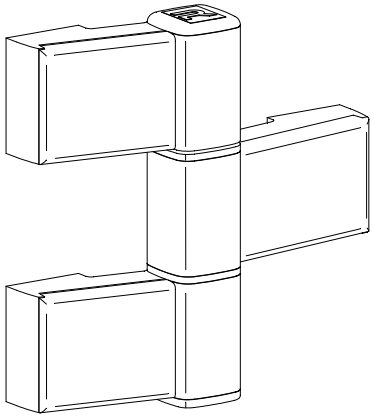

CS 68
005.0125.XX
005.2027.XX
005.3026.XX

005.0125.XX
005.1028.XX
005.3014.XX

CS 59
CS 77
CS 59Pa
Eco system
Eco system-AP
CS 86-HI
CS 77-SP

SERIE 60 AT
X=47 Y=57.5 Z=20
ANCHORS NOT INCLUDED: SEE SYST. CAT. CS

D0082427

DEURSCHARNIER
CHARNIERE PORTE
DOOR HINGE
TUERBAND

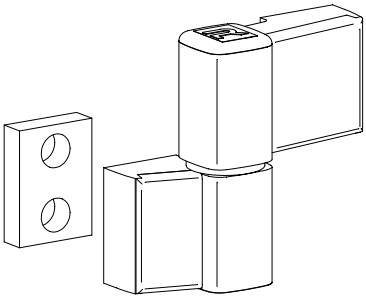

065.6822.XX

DEURSCHARNIER 62.5MM
CHARNIERE PORTE 62.5MM
DOOR HINGE 62.5MM
TUERBAND 62.5MM

CS 68
005.0125.XX
005.0121.XX

005.0125.XX
005.0052.XX

CS 59
CS 77
CS 59Pa

SERIE 60 AT
X=20.5 Y=42 Z=29
ANCHORS NOT INCLUDE: SEE SYST. CAT. CS

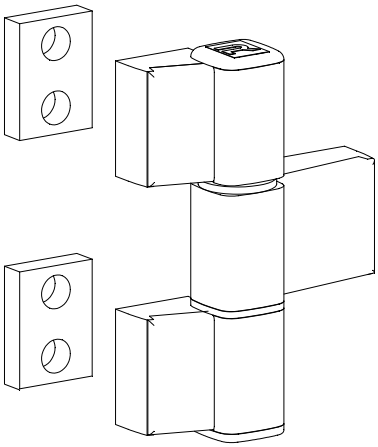

065.6823.XX

DEURSCHARNIER 62.5MM
CHARNIERE PORTE 62.5MM
DOOR HINGE 62.5MM
TUERBAND 62.5MM

CS 68
005.0125.XX
005.0121.XX

005.0125.XX
005.0052.XX

CS 59
CS 77
CS 59Pa

SERIE 60 AT
X=20.5 Y=42 Z=29
ANCHORS NOT INCLUDE: SEE SYST. CAT. CS

D0082430

 SERIE 60 AT Ø11 D=42 STAINLESS STEEL	065.6603.-- SCHROEF ANKER 42MM ANCRAGE A VISSER 42MM SCREW ANCHOR 42MM SCHRAUB ANKER 42MM	CS 59 CS 68 CS 77 CS 77-FP Eco system CS 86-HI Eco system-AP CS 77-SP		
 SERIE 60 AT Ø11 D=50 STAINLESS STEEL	065.6604.-- SCHROEF ANKER 50MM ANCRAGE A VISSER 50MM SCREW ANCHOR 50MM SCHRAUB ANKER 50MM	CS 59 CS 68 CS 77 CS 86-HI CS 77-SP		
 SERIE 60 AT Ø11 D=55 STAINLESS STEEL	065.6605.-- SCHROEF ANKER 55MM ANCRAGE A VISSER 55MM SCREW ANCHOR 55MM SCHRAUB ANKER 55MM	CS 59 CS 68 CS 77 CS 86-HI CS 77-SP		
 SERIE 60 AT Ø11 D=42 CHROMATED STEEL	065.6613.-- SCHROEF ANKER 42MM ANCRAGE A VISSER 42MM SCREW ANCHOR 42MM SCHRAUB ANKER 42MM	CS 59 CS 68 CS 77 Eco system CS 86-HI Eco system-AP CS 77-SP		
 SERIE 60 AT Ø11 D=50 CHROMATED STEEL	065.6614.-- SCHROEF ANKER 50MM ANCRAGE A VISSER 50MM SCREW ANCHOR 50MM SCHRAUB ANKER 50MM	CS 59 CS 68 CS 77 CS 86-HI CS 77-SP		
 SERIE 60 AT Ø11 D=55 CHROMATED STEEL	065.6615.-- SCHROEF ANKER 55MM ANCRAGE A VISSER 55MM SCREW ANCHOR 55MM SCHRAUB ANKER 55MM	CS 59 CS 68 CS 77 CS 86-HI CS 77-SP		

D0082431

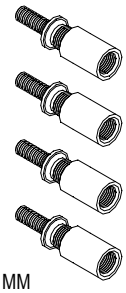 GR = 25 - 32.5 MM	065.6495.-- AFSTANDSBUSSEN DR.HAHN 4xGR PIECES DE DISTANCE DR.HAHN 4xGR DISTANCE BUSHES DR.HAHN 4xGR DISTANZBUCHSEN DR.HAHN 4xGR	CS 68 005.0869.XX 005.1014.XX		
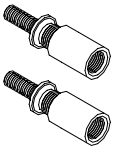 GR = 25 - 32.5 MM	065.6500.-- AFSTANDSBUSSEN DR.HAHN 2xGR PIECES DE DISTANCE DR.HAHN 2xGR DISTANCE BUSHES DR.HAHN 2xGR DISTANZBUCHSEN DR.HAHN 2xGR	CS 68 005.1100.XX 005.0028.XX 005.1014.XX 005.1109.XX 005.0028.XX 005.1014.XX 005.1110.XX 005.0028.XX 005.1014.XX		

D0082432

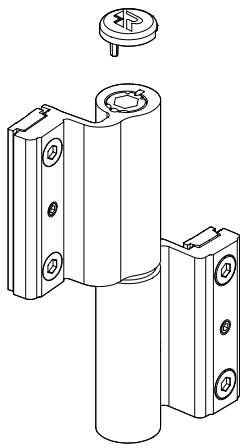

065.6510.XX

DEURSCHARNIER 2-DELIG
CHARNIERE PORTE 2-PARTIES
DOOR HINGE 2-PART
TUERBAND 2-TEILIG

CS 68-AP	CS 77-BP
005.0125.XX	Eco system
005.0121.XX	CS 38-SL
	Eco system-AP
005.0125.XX	CS 38-SL/AP
005.0052.XX	
005.1216.XX	
005.0221.XX	
CS 59Pa	
CS 59	
CS 59-HV	
CS 59-Re	
CS 59-So	
CS 68	
CS 68-HV	
CS 68-Re	
CS 68-So	
CS 77	
CS 77-HV	
CS 77-AP	

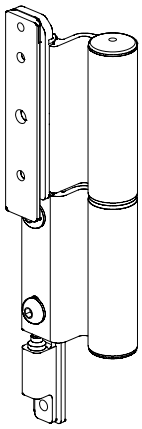

065.6514.XX

DEURSCHARNIER NAAR BINNENDRAAIEND
CHARNIERE PORTE OUVRANT VERS L'INTERIEUR
DOOR HINGE INWARD OPENING
TUERBAND NACH INNEN OEFFNEND

CS 68-AP
005.0125.XX
005.0121.XX

005.1216.XX
005.0221.XX

CS 59Pa
CS 59
CS 68
CS 77
CS 77-AP
Eco system
CS 38-SL
Eco system-AP
CS 38-SL/AP

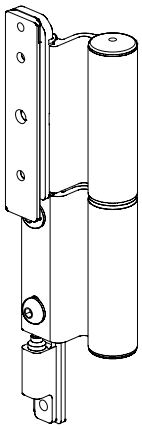

065.6515.XX

DEURSCHARNIER NAAR BUITENDRAAIEND
CHARNIERE PORTE OUVRANT VERS L'EXTERIEUR
DOOR HINGE OUTWARD OPENING
TUERBAND NACH AUSSEN OEFFNEND

CS 68-AP
005.0125.XX
005.0052.XX

CS 59Pa
CS 59
CS 68
CS 77
CS 77-AP
Eco system
CS 38-SL
Eco system-AP
CS 38-SL/AP

D0082435

EINDSTUK DEUR
PIECE FINALE PORTE
END PIECE DOOR
ENDSTUECK TUER

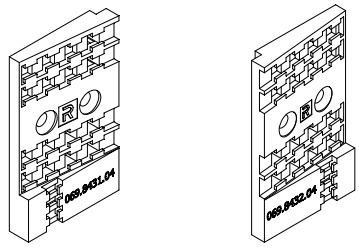 H=50 B=11.2 D=47.5	**061.7540.04** SET BORSTELSTUKKEN DEUR SET SUPPORT DE BROSSE PORTE SET BRUSH HOLDERS DOOR SATZ BUERSTENHALTERS HAUSTUER	CS 68 005.1014.XX 005.1026.XX		2 st./pc 052.5313.-- DIN 7982 4.2 x 32 2 st./pc 052.5316.-- DIN 7982 4.2 x 19
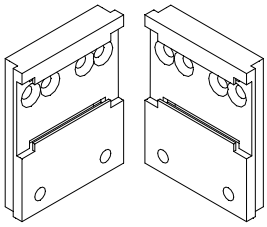 H=60 B=10 D=47.5	**069.6738.04** EINDSTUK BODEMPROFIEL PIECE FINALE PROFILE DE SEUIL END PIECE FLOOR PROFILE ENDKAPPE SCHWELLE	CS 68 005.0869.XX 005.0898.XX		2 st./pc 052.5313.-- DIN 7982 4.2 x 32 2 st./pc 052.5316.-- DIN 7982 4.2 x 19
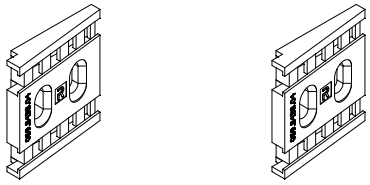 H=70.5 B=42.3 D=9	**069.8433.04** EINDSTUKKEN BODEMPROFIEL PIECES FINALES PROFILE DE SEUIL END PIECES FLOOR PROFILE ENDKAPPEN SCHWELLE	CS 68 005.0569.XX 005.0598.XX 005.1028.XX 005.1869.XX 005.1898.XX		4 st./pc 052.5311.-- DIN 7982 4.2 x 16
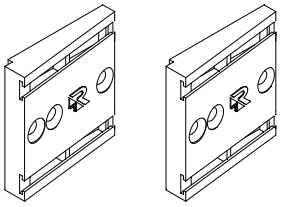 H=45 B=9 D=42.5	**069.8439.04** BORSTELSTUK LINKS/RECHTS SUPPORT DE BROSSE GAUCHE/DROITE BRUSHHOLDER LEFT/RIGHT BUERSTENHALTER LINKS/RECHTS	CS 68 005.1016.XX 005.1815.XX 005.2015.XX 005.3014.XX 005.3026.XX		4 st./pc 052.5311.-- DIN 7982 4.2 x 16

D0082436

G

CS 68-FP
EW 30

EINDSTUK DEUR
PIECE FINALE PORTE
END PIECE DOOR
ENDSTUECK TUER

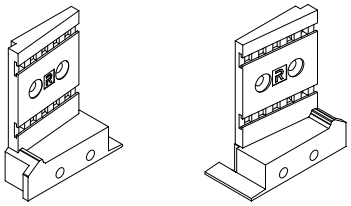

H=70.5
B=29
D=59

069.8430.04

EINDSTUKKEN BODEMPROFIEL
PIECES FINALES PROFILE DE SEUIL
END PIECES FLOOR PROFILE
ENDKAPPEN SCHWELLE

CS 68
005.0569.XX
005.0598.XX
005.0873.XX
005.0874.XX
005.1028.XX
005.1869.XX
005.1898.XX

4 st./pc
052.5311.--
DIN 7982
4.2 x 16

4 st./pc
052.5313.--
DIN 7982
4.2 x 32

D0082440

G

STOLPSTUK DEUR
PIECE DOUBLE OUVRANT PORTE
DOUBLE CASEMENT PIECE DOOR
STULPSTUECK TUER

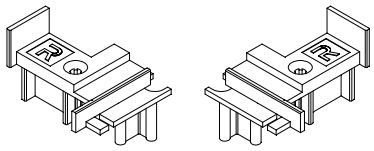 H=25.5 B=24.8 D=7.35	**069.6692.04** EINDSTUKKEN Z-T DEUR PIECES FINALES PORTE Z-T END PIECES Z-T DOOR ENDKAPPE Z-T TUER	CS 68-FP 005.0714.XX 005.0726.XX CS 59 CS 77 CS 77-BP Eco system Eco system-AP CS 59Pa CS 68	
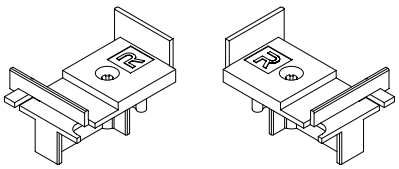 H=25.5 B=24.8 D=7.35	**069.6693.04** EINDSTUKKEN Z-T DEUR PIECES FINALES PORTE Z-T END PIECES Z-T DOOR ENDKAPPE Z-T TUER	CS 68-FP 005.0714.XX 005.0726.XX CS 59 CS 77 CS 77-BP Eco system Eco system-AP CS 59Pa CS 68	
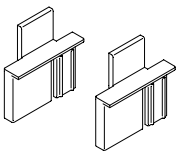 H=30 B=38/48 D=38/48	**069.8547.04** EINDSTUKKEN PIECES FINALES END PIECES ENDKAPPEN	CS 68 005.2015.XX	2 st./pc 052.5313.-- DIN 7982 4.2 x 32
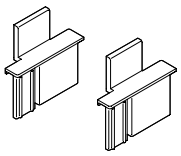 H=30 B=37.95/47.95 D=37.95/47.95	**069.8550.04** EINDSTUKKEN PIECES FINALES END PIECES ENDKAPPEN	CS 68 005.1815.XX	2 st./pc 052.5313.-- DIN 7982 4.2 x 32

D0082447

EINDSTUK DEUR
PIECE FINALE PORTE
END PIECE DOOR
ENDSTUECK TUER

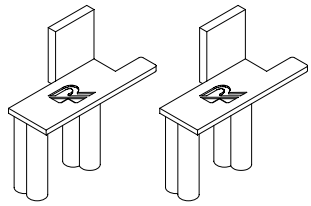 H=26 B=10.5 D=26	069.8511.04 EINDSTUKKEN Z-T DEUR PIECES FINALES PORTE Z-T END PIECES Z-T DOOR ENDKAPPE Z-T TUER	CS 68 005.3014.XX CS 77 CS 77-FP CS 86-HI CS 77-SP		
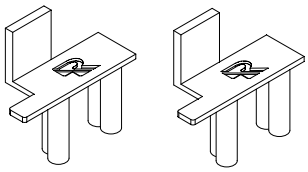 H=26 B=10.5 D=26	069.8512.04 EINDSTUKKEN Z-T DEUR PIECES FINALES PORTE Z-T END PIECES Z-T DOOR ENDKAPPE Z-T TUER	CS 77 CS 77-FP CS 86-HI CS 77-SP CS 68		

D0082450

G

CS 68-FP
EW 30

EINDSTUK DEUR
PIECE FINALE PORTE
END PIECE DOOR
ENDSTUECK TUER

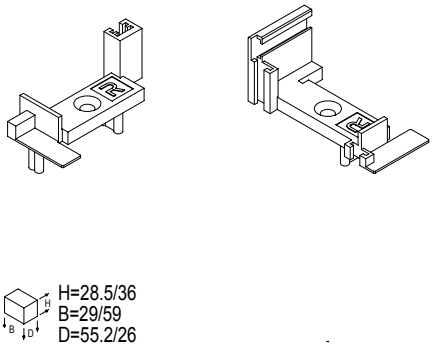 H=28.5/36 B=29/59 D=55.2/26	069.6942.04 EINDSTUKKEN PIECES FINALES END PIECES ENDKAPPEN	CS 68		2 st./pc 052.5313.-- DIN 7982 4.2 x 32
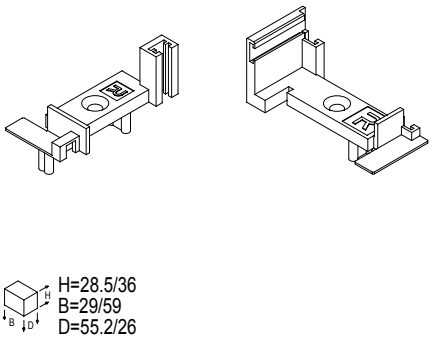 H=28.5/36 B=29/59 D=55.2/26	069.6945.04 EINDSTUKKEN PIECES FINALES END PIECES ENDKAPPEN	CS 68		2 st./pc 052.5313.-- DIN 7982 4.2 x 32

D0082452

G

EINDSTUK DEUR
PIECE FINALE PORTE
END PIECE DOOR
ENDSTUECK TUER

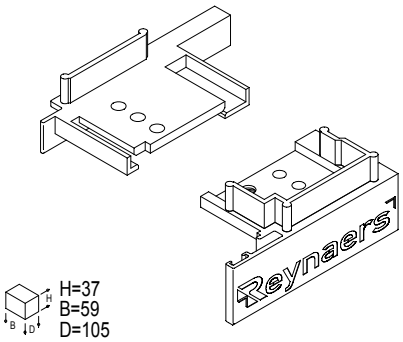 H=37 B=59 D=105	069.6685.04 EINDSTUK DEURVLEUGEL ONDERAAN PIECE FINALE OUVRANT PORTE EN BAS END PIECE BOTTOM DOOR VENT ENDKAPPE TUERFLUEGEL UNTEN	CS 59 CS 68 CS 77		1 st./pc 052.5311.-- DIN 7982 4.2 x 16
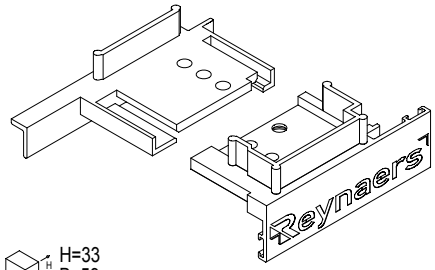 H=33 B=59 D=105	069.6686.04 EINDSTUK DEURVLEUGEL ONDERAAN PIECE FINALE OUVRANT PORTE EN BAS END PIECE BOTTOM DOOR VENT ENDKAPPE TUERFLUEGEL UNTEN	CS 59 CS 68 CS 77		1 st./pc 052.5311.-- DIN 7982 4.2 x 16
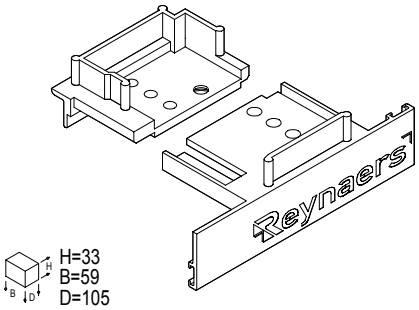 H=33 B=59 D=105	069.6687.04 EINDSTUK DEURVLEUGEL ONDERAAN PIECE FINALE OUVRANT PORTE EN BAS END PIECE BOTTOM DOOR VENT ENDKAPPE TUERFLUEGEL UNTEN	CS 59 CS 77 CS 77-BP CS 68		1 st./pc 052.5311.-- DIN 7982 4.2 x 16
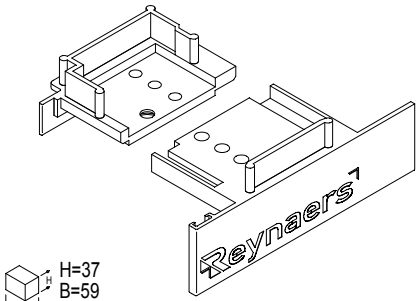 H=37 B=59 D=105	069.6688.04 EINDSTUK DEURVLEUGEL ONDERAAN PIECE FINALE OUVRANT PORTE EN BAS END PIECE BOTTOM DOOR VENT ENDKAPPE TUERFLUEGEL UNTEN	CS 59 CS 77 CS 77-BP CS 68		1 st./pc 052.5311.-- DIN 7982 4.2 x 16

D0082456

G

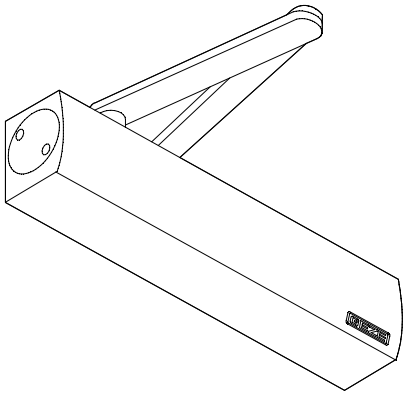

GEZE TS 4000
H=98 B=287 D=46

065.7580.14

DEURSLUITER
FERMETURE PORTE
DOOR CLOSER
TUERSCHLIESSER

CS 59Pa
CS 59
CS 68
VISION 50
CS 77
CS 77-BP
Eco system
Eco system-AP

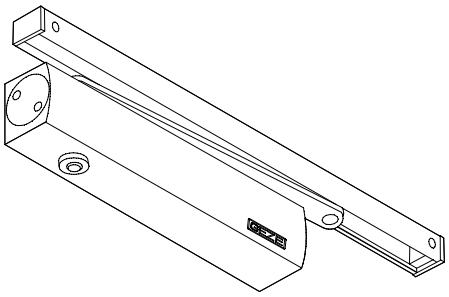

GEZE TS 5000
H=100 B=448.5 D=46

065.7581.14

DEURSLUITER
FERMETURE PORTE
DOOR CLOSER
TUERSCHLIESSER

CS 59Pa
CS 59
CS 68
CS 77
CS 77-BP
CS 77-FP
Eco system
Eco system-AP
CS 77-SP

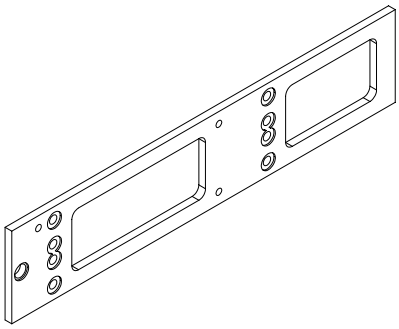

H=60
B=5
D=287

065.7582.14

BEVESTIGINGSPLAAT
PIECE DE FIXATION
FIXATION PLATE
BEFESTIGUNGSPLATTE

CS 68
065.7580.14
065.7581.14

CS 59Pa
CS 59
CS 77
Eco system
CS 77-FP
CS 77-SP

Eco system-AP

D0082459

G

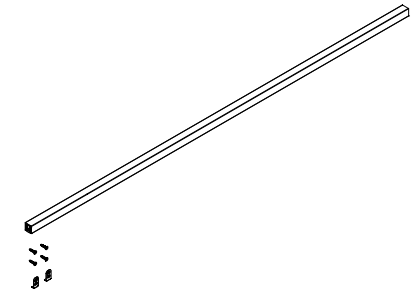

H=20
B=19.8
D=960

081.9040.--

AUTOMATISCHE DEURDICHTING 1-ZIJDIG 960MM
FERMETURE DE PORTE AUTOMAT.UNILATERALE 960MM
AUTOMATIC DOOR CLOSER 1-SIDE 960MM
AUTOMATISCHER TUERSCHLIESSER 1-SEITIG 960MM

CS 68
CS 77
CS 77-FP
CS 86-HI
CS 77-SP

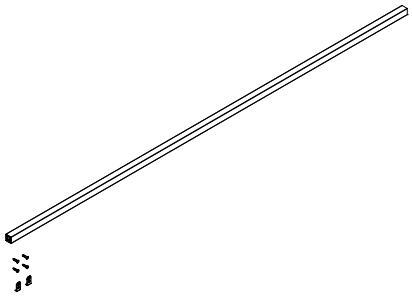

H=20
B=19.8
D=1210

081.9041.--

AUTOMATISCHE DEURDICHTING 1-ZIJDIG 1210MM
FERMETURE DE PORTE AUTOMAT.UNILATERALE 1210MM
AUTOMATIC DOOR CLOSER 1-SIDE 1210MM
AUTOMATISCHER TUERSCHLIESSER 1-SEITIG 1210MM

CS 68
CS 77
CS 77-FP
CS 86-HI
CS 77-SP

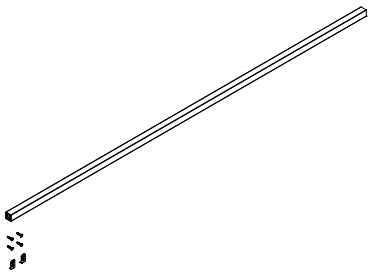

H=20
B=19.8
D=1085

081.9042.--

AUTOMATISCHE DEURDICHTING 1-ZIJDIG 1085MM
FERMETURE DE PORTE AUTOMAT.UNILATERALE 1085MM
AUTOMATIC DOOR CLOSER 1-SIDE 1085MM
AUTOMATISCHER TUERSCHLIESSER 1-SEITIG 1085MM

CS 68
CS 77
CS 77-FP
CS 86-HI
CS 77-SP

D0082470

080.9123.SY

BINNENBEGLAZINGSDICHTING 3MM
JOINT DE VITRAGE INTERIEUR 3MM
INNER GLAZING GASKET 3MM
INNENVERGLASUNGSDICHTUNG 3MM

.04 .47

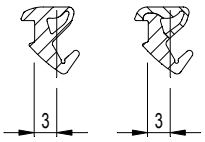

CS 59Pa	BOREALE	CS 24-SL
CS 59	MOSQUITO	Eco system 75
CS 59-HV	CS 77	CP 45Pa (GR)
CS 59-Re	CS 77-HV	CS 77-SP
CS 59-So	CS 59Pa-AP	
CS 68	CS 59-AP	
CS 68-HV	CS 68-AP	
CS 68-Re	CS 77-AP	
CS 68-So	CS 77-BP	
VISION 50	CS 77-FP	
TP 110	CP 96	
TP 138	CP 45Pa	
TLS 110	CP 96-LS	
CP 130	CP 96-AP	
CP 130-LS	CP 96-LS/AP	
CP 155	TP 110-Re	
CP 155-LS	Eco system	
CW 50	CS 38-SL	
CW 60	Eco system-AP	
TR 200	CS 38-SL/AP	

H=8.9
B=7.7
COLOR= WHITE

D0082471

080.9124.SY

BINNENBEGLAZINGSDICHTING 4MM
JOINT DE VITRAGE INTERIEUR 4MM
INNER GLAZING GASKET 4MM
INNENVERGLASUNGSDICHTUNG 4MM

.04 .47

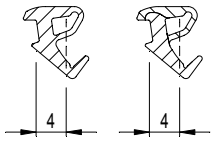

CS 59Pa	BOREALE	Eco system 75
CS 59	CS 77	CF 77
CS 59-HV	CS 77-HV	CP 45Pa (GR)
CS 59-Re	CS 59Pa-AP	CS 77-SP
CS 59-So	CS 59-AP	
CS 68	CS 68-AP	
CS 68-HV	CS 77-AP	
CS 68-Re	CS 77-BP	
CS 68-So	CS 77-FP	
VISION 50	CP 96	
TP 110	CP 45Pa	
TP 138	CP 96-LS	
TLS 110	CP 96-AP	
CP 130	CP 96-LS/AP	
CP 130-LS	TP 110-Re	
CP 155	Eco system	
CP 155-LS	CS 38-SL	
CW 50	Eco system-AP	
CW 60	CS 38-SL/AP	
TR 200	CS 24-SL	

H=8.7
B=9.6
COLOR= RED

080.9125.SY

BINNENBEGLAZINGSDICHTING 5MM
JOINT DE VITRAGE INTERIEUR 5MM
INNER GLAZING GASKET 5MM
INNENVERGLASUNGSDICHTUNG 5MM

.04 .47

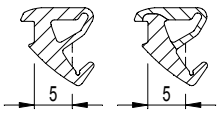

CS 59Pa	CS 77	CF 77
CS 59	CS 77-HV	CP 45Pa (GR)
CS 59-HV	CS 59Pa-AP	CS 77-SP
CS 59-Re	CS 59-AP	
CS 59-So	CS 68-AP	
CS 68	CS 77-AP	
CS 68-HV	CS 77-BP	
CS 68-Re	CS 77-FP	
CS 68-So	CP 96	
VISION 50	CP 45Pa	
TP 110	CP 96-LS	
TP 138	CP 96-AP	
TLS 110	CP 96-LS/AP	
CP 130	TP 110-Re	
CP 130-LS	Eco system	
CP 155	CS 38-SL	
CP 155-LS	Eco system-AP	
CW 50	CS 38-SL/AP	
CW 60	CS 24-SL	
TR 200	Eco system 75	

H=10.3
B=9.7
COLOR= BLUE

D0082476

.04 .47 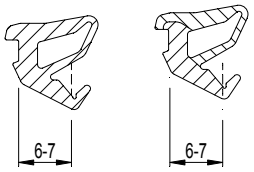 H=11.5 B=11.4 COLOR= GREEN	**080.9126.SY** BINNENBEGLAZINGSDICHTING 6-7MM JOINT DE VITRAGE INTERIEUR 6-7MM INNER GLAZING GASKET 6-7MM INNENVERGLASUNGSDICHTUNG 6-7MM	CS 59Pa CS 59 CS 59-HV CS 59-Re CS 59-So CS 68 CS 68-HV CS 68-Re CS 68-So VISION 50 TP 110 TP 138 TLS 110 CP 130 CP 130-LS CP 155 CW 50 CW 60 TR 200 CS 77 CS 77-HV CS 59Pa-AP	CS 59-AP CS 68-AP CS 77-AP CS 77-BP CS 77-FP CP 96 CP 96-LS CP 96-AP CP 96-LS/AP TP 110-Re Eco system CS 38-SL Eco system-AP CS 38-SL/AP CS 24-SL Eco system 75 CF 77 CP 45Pa (GR) CS 77-SP
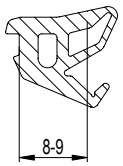 H=13.4 B=14.8 COLOR= YELLOW	**080.9128.04** BINNENBEGLAZINGSDICHTING 8-9MM JOINT DE VITRAGE INTERIEUR 8-9MM INNER GLAZING GASKET 8-9MM INNENVERGLASUNGSDICHTUNG 8-9MM	CS 59Pa CS 59 CS 59-HV CS 59-Re CS 59-So CS 68 CS 68-HV CS 68-Re CS 68-So VISION 50 TP 110 TP 138 TLS 110 CP 130 CP 130-LS CP 155 CW 50 CW 60 TR 200 CS 77 CS 77-HV CS 59Pa-AP	CS 59-AP CS 68-AP CS 77-AP CS 77-BP CP 96 CP 96-LS CP 96-AP CP 96-LS/AP TP 110-Re Eco system CS 38-SL Eco system-AP CS 38-SL/AP CS 24-SL Eco system 75 CF 77 CS 77-SP
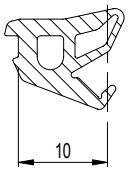 H=13.4 B=15.8 COLOR= VIOLET	**080.9130.04** BINNENBEGLAZINGSDICHTING 10MM JOINT DE VITRAGE INTERIEUR 10MM INNER GLAZING GASKET 10MM INNENVERGLASUNGSDICHTUNG 10MM	CS 59Pa CS 59 CS 59-HV CS 59-Re CS 59-So CS 68 CS 68-HV CS 68-Re CS 68-So VISION 50 TP 110 TP 138 TLS 110 CP 130 CP 130-LS CP 155 CW 50 CW 60 TR 200 CS 77 CS 77-HV CS 59Pa-AP	CS 59-AP CS 68-AP CS 77-AP CS 77-BP CP 96 CP 45Pa CP 96-LS CP 96-AP CP 96-LS/AP TP 110-Re Eco system CS 38-SL Eco system-AP CS 38-SL/AP CS 24-SL Eco system 75 CF 77 CS 77-SP

D0082477

.04 .47 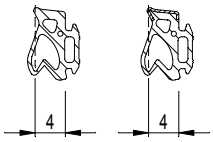 H=10 B=9	080.9114.SY BUITENBEGLAZINGSDICHTING 4MM JOINT DE VITRAGE EXTERIEUR 4MM OUTER GLAZING GASKET 4MM AUSSENVERGLASUNGSDICHTUNG 4MM	CS 59Pa CS 59 CS 59-Re CS 59-So CS 68 CS 68-Re CS 68-So VISION 50 TP 110 TP 138 TLS 110 CP 130 CP 130-LS CP 155 CR 120 CS 77	CS 59-AP CS 68-AP CS 77-AP CS 77-BP CS 77-FP CP 96 CP 45Pa CP 96-LS CP 96-AP CP 96-LS/AP TP 110-Re Eco system CS 38-SL Eco system-AP CS 38-SL/AP CS 24-SL
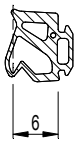 H=10 B=11	080.9116.04 BUITENBEGLAZINGSDICHTING 6MM JOINT DE VITRAGE EXTERIEUR 6MM OUTER GLAZING GASKET 6MM AUSSENVERGLASUNGSDICHTUNG 6MM	CS 59Pa CS 59 CS 59-Re CS 59-So CS 68 CS 68-Re CS 68-So VISION 50 TP 110 TP 138 TLS 110 CP 130 CP 130-LS CP 155 CR 120 CS 77	CS 59-AP CS 68-AP CS 77-AP CS 77-BP CP 96 CP 45Pa CP 96-LS CP 96-AP CP 96-LS/AP TP 110-Re Eco system CS 38-SL Eco system-AP CS 38-SL/AP CS 24-SL CS 24-SL/AP
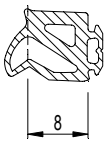 H=10 B=13	080.9118.04 BUITENBEGLAZINGSDICHTING 8MM JOINT DE VITRAGE EXTERIEUR 8MM OUTER GLAZING GASKET 8MM AUSSENVERGLASUNGSDICHTUNG 8MM	CS 59Pa CS 59 CS 59-Re CS 59-So CS 68 CS 68-Re CS 68-So VISION 50 TP 110 TP 138 TLS 110 CP 130 CP 130-LS CP 155 CR 120 CS 77	CS 59-AP CS 68-AP CS 77-AP CS 77-BP CP 96 CP 96-LS CP 96-AP CP 96-LS/AP TP 110-Re Eco system CS 38-SL Eco system-AP CS 38-SL/AP Eco system 75 CF 77 CS 77-SP
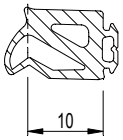 H=10 B=15	080.9120.04 BUITENBEGLAZINGSDICHTING 10MM JOINT DE VITRAGE EXTERIEUR 10MM OUTER GLAZING GASKET 10MM AUSSENVERGLASUNGSDICHTUNG 10MM	CS 59Pa CS 59 CS 59-Re CS 59-So CS 68 CS 68-Re CS 68-So VISION 50 TP 110 TP 138 TLS 110 CP 130 CP 130-LS CP 155 CR 120 CS 77	CS 59-AP CS 68-AP CS 77-AP CS 77-BP CP 96 CP 96-LS CP 96-AP CP 96-LS/AP TP 110-Re Eco system CS 38-SL Eco system-AP CS 38-SL/AP Eco system 75 CF 77 CS 77-SP

D0082478

 H=8.5 B=5.76	080.8442.04 AKOESTISCHE DICHTING JOINT ACOUSTIQUE ACOUSTIC GASKET SCHALLDICHTUNG	Eco system CS 38-SL CS 86-HI Eco system-AP CS 38-SL/AP CF 77	
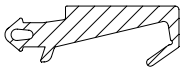 H=8 B=23	080.9074.04 AANSLAGDICHTING JOINT DE BUTEE BUTT STRIP ANSCHLAGDICHTUNG	CS 59 CS 68 CS 77 Eco system Eco system-AP	
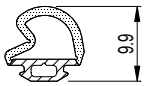 H=9.9 B=10.4	080.9078.04 AKOESTISCHE DICHTING JOINT ACOUSTIQUE ACOUSTIC GASKET SCHALLDICHTUNG	CS 59 CS 68 CS 77 CS 59-AP CS 68-AP CS 77-AP Eco system Eco system-AP CS 77-SP	
 H=7.7 B=10	080.9080.04 AANSLAGDICHTING JOINT DE BUTEE BUTT STRIP ANSCHLAGDICHTUNG	CS 77-FP CS 86-HI	
 H=6 B=9	080.9100.04 STEUNRUBBER SILICONENBEGLAZING JOINT DE SUPPORT VITRAGE SILICONE SUPPORT GASKET SILICONE GLAZING STUETZDICHTUNG SILIKONVERGLASUNG	CS 59Pa CS 59Pa-AD CS 59Pa-CD CS 59Pa-SD CS 59 CS 59-HV CS 59-Re CS 59-So CS 59-AD CS 59-CD CS 59-SD CS 68 CS 68-HV	CS 68-Re CS 68-So CS 68-FP CS 77 CS 77-HV CS 59-AP CS 68-AP CS 77-AP Eco system-AP CS 38-SL/AP CS 24-SL/AP CF 77

D0082480

 H=5.2 B=6.8	080.9433.04 AANSLAGDICHTING JOINT DE BUTEE BUTT STRIP ANSCHLAGDICHTUNG	CS 59Pa CS 59 CS 68 CS 77		
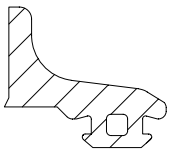 H=9.3 B=10.7	080.9440.04 AANSLAGDICHTING JOINT DE BUTEE BUTT STRIP ANSCHLAGDICHTUNG	CS 77-FP CS 77 CS 86-HI CS 104		
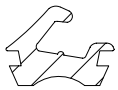 H=5.3 B=7.2	080.9445.04 AANSLAGDICHTING JOINT DE BUTEE BUTT STRIP ANSCHLAGDICHTUNG	CS 59Pa CS 59 CS 68 CW 50 CW 50-RA CW 60 CS 77 CS 104		
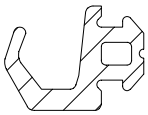 H=6.6 B=9.7	080.9449.04 AKOESTISCHE DICHTING JOINT ACOUSTIQUE ACOUSTIC GASKET SCHALLDICHTUNG	CS 59Pa CS 59 CS 68 CS 77 CS 104		

D0082484

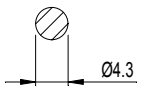 Ø4.3 EPDM DENSITY 0.5	080.9381.04 DICHTING Ø4MM JOINT Ø4MM GASKET Ø4MM DICHTUNG Ø4MM	CS 59 Eco system Eco system-AP CS 24-SL CS 24-SL/AP CW 65-EF CW 65-EF/SG CW 65-EF/HI CS 59Pa CS 59-HV CS 59-Re CS 59-So CS 68 CS 68-HV CS 68-Re	CS 68-So VISION 50 TP 110 TP 138 TLS 110 CP 130 CP 130-LS CP 155 CP 155-LS CW 50 CW 50-HI CW 50-HL CW 50-RA CW 60 TR 200 BOREALE
 H=6 B=8	080.9382.04 DICHTING 8x6MM JOINT 8x6MM GASKET 8x6MM DICHTUNG 8x6MM	CS 59Pa CS 59 CS 59-HV CS 59-Re CS 59-So CS 68 CS 68-HV CS 68-Re CS 68-So CS 77 CS 77-HV	
 Ø4.3 EPDM DENSITY 0.58	080.9383.04 DICHTING JOINT GASKET DICHTUNG	Eco system CS 68 CP 130 CP 130-LS CP 155 CP 155-LS CS 77 CS 68 Optima Eco system Optima VENTALIS CF 77 CS 77-SP	
 H=6 B=8	084.9397.04 DICHTING ZELFKLEVEND 8x6MM JOINT AUTOCOLLANT 8x6MM SELF-ADHESIVE GASKET 8x6MM DICHTUNG SELBSTKLEBEND 8x6MM	CS 59Pa CS 59 CS 59-HV CS 59-Re CS 59-So CS 68 CS 68-HV CS 68-Re CS 68-So CS 77 CS 77-HV Eco system GP 51 Eco system-AP	

D0082485

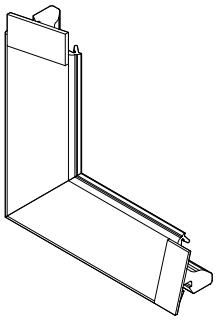

080.9478.04

MIDDENDICHTING GEVULKANISEERD
JOINT CENTRAL VULCANISE
VULCANISED CENTRAL GASKET
VULKANISIERTE MITTELDICHTUNGSECKE

CS 68

H=60
B=60
USED WITH 080.9650.04

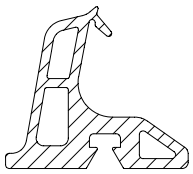

080.9650.04

MIDDENDICHTING
JOINT CENTRAL
CENTRAL GASKET
MITTELDICHTUNG

CS 68
CS 68-HV
CS 68-Re
CS 68-So

H=21.4
B=24.2

D0082486

 H=32 B=4.8 L=2m	081.9140.04 BORSTELDICHTING DEUR ONDER JOINT-BROSSE PORTES EN BAS WOOLPILE DOORS BOTTOM BUERSTENDICHTUNG TUEREN UNTEN	CS 59Pa CS 59 CS 68 CS 77 CS 77-BP		
 H=20 B=4.8 D=2000	081.9141.04 BORSTELDICHTING DEUR ONDER JOINT-BROSSE PORTES EN BAS WOOLPILE DOORS BOTTOM BUERSTENDICHTUNG TUEREN UNTEN	CS 86-HI CS 59Pa CS 59 CS 68 CS 77 CS 77-BP CS 77-FP Eco system Eco system-AP CF 77		
 H=25 B=4.8 L=2m	081.9142.04 BORSTELDICHTING DEUR ONDER JOINT-BROSSE PORTES EN BAS WOOLPILE DOORS BOTTOM BUERSTENDICHTUNG TUEREN UNTEN	CS 59Pa CS 59 CS 68 CS 77 CS 77-BP Eco system Eco system-AP		
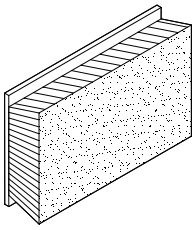 H=12.5 B=29 L=1m	081.9230.07 BORSTELDICHTING BREED JOINT-BROSSE LARGE WOOLPILE WIDE BUERSTENDICHTUNG BREIT	CS 59Pa CS 59 CS 68 TP 110 TLS 110 CP 155 CS 77		

D0082488

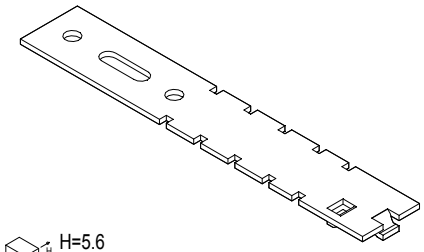

H=5.6
B=160
D=25

056.6297.00

INDRAAI-ANKER
ANCRAGE A CLIPPER
SCREW FIXING LUG
MAUERANKER ZUM EINKLEMMEN

CS 59Pa	CP 155
CS 59	CS 77
CS 59-HV	CS 77-HV
CS 59-Re	CS 77-BP
CS 59-So	TP 110-Re
CS 68	Eco system
CS 68-HV	Eco system-AP
CS 68-Re	CF 77
CS 68-So	
TP 110	
TLS 110	
CP 130	
CP 130-LS	

D0082489

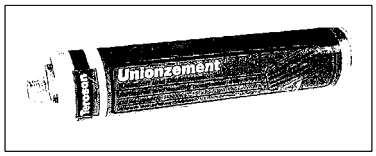

310ML

084.9103.04

VULKANISEERLIJM DICHTINGEN 310ML
COLLE VULCANISANTE JOINTS 310ML
VULCANISING GLUE GASKETS 310ML
VULKANISIERKLEBER DICHTUNGEN 310ML

D0082490

BRANDWERENDE VULSTUKKEN
PIECES DE REMPLISSAGES ANTI-FEU
FIRE RESISTANT FILLING PIECES
FEUERHEMMENDE FUELLSTUECKE

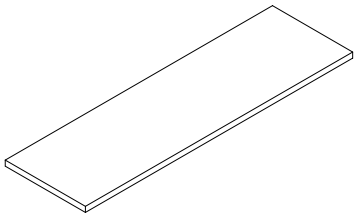 H=2 B=30 D=100	084.9015.-- STEUNBLOK BRANDWEREND 2MM SUPPORT ANTI-FEU 2MM SUPPORTING PIECE FIRE-RESISTANT 2MM BRANDSCHUTZSTUETZKLOTZ 2MM	CS 68-FP 005.0714.XX 005.0720.XX 005.0783.XX 005.0914.XX 005.0916.XX 005.0925.XX 005.0954.XX CW 50-FP CS 77-FP		
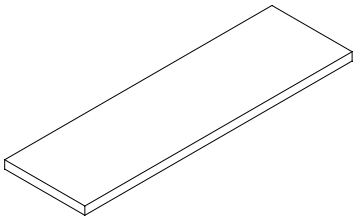 H=3 B=30 D=100	084.9016.-- STEUNBLOK BRANDWEREND 3MM SUPPORT ANTI-FEU 3MM SUPPORTING PIECE FIRE-RESISTANT 3MM BRANDSCHUTZSTUETZKLOTZ 3MM	CS 68-FP 005.0714.XX 005.0720.XX 005.0783.XX 005.0914.XX 005.0916.XX 005.0925.XX 005.0954.XX CW 50-FP CS 77-FP		

D0082492

GLASKLIPS
CLIP DE VITRAGE
SAFETY CLIP
SICHERUNGSKLEMME

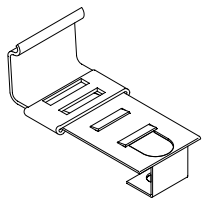 min 11mm - max 32mm	068.6355.-- GLASKLIPS BINNEN CLIPPE DE VITRAGE INTERIEUR INNER GLAZING CLIP INNENGLASKLEMME	CS 68-FP		1 st./pc 052.5320.-- DIN 7981 3.5 x 9.5
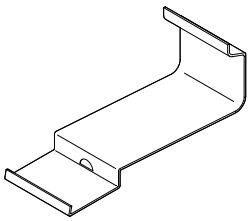 min 11mm - max 32mm	068.6356.-- GLASKLIPS BUITEN CLIPPE DE VITRAGE EXTERIEURE OUTER GLAZING CLIP AUSSENGLASKLEMME	CS 68-FP		
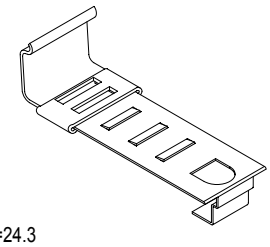 H=24.3 B=45.5 D=19	068.6361.-- KLIPS CLIP CLIP KLEMME	CS 77-FP		1 st./pc 052.5320.-- DIN 7981 3.5 x 9.5
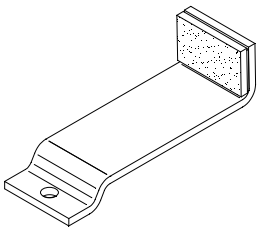 H=20.2 B=20 D=57.2	068.6365.-- GLASKLIPS BUITEN CLIPPE DE VITRAGE EXTERIEURE OUTER GLAZING CLIP AUSSENGLASKLEMME	CS 77-FP		1 st./pc 052.5309.-- DIN 7982 3.9 x 19

D0082493

OPZWELLENDE DICHTING
JOINT GONFLANT
SWELLING GASKET
SCHWELLENDE DICHTUNG

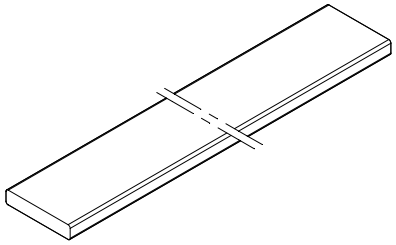 H=6 B=30 D=2100	084.9010.04 OPZWELLENDE DICHTING 30MM JOINT GONFLANT 30MM SWELLING GASKET 30MM SCHWELLENDE DICHTUNG 30MM	CS 68-FP		
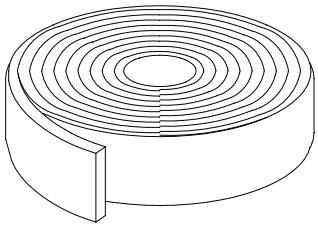 H=25 B=2 L=25000	084.9025.04 OPZWELLENDE DICHTING 2x25MM L=25M JOINT GONFLANT 2x25MM L=25M SWELLING GASKET 2x25MM L=25M SCHWELLENDE DICHTUNG 2x25MM L=25M	CS 68-FP		
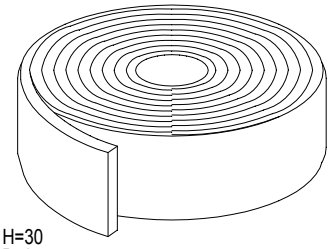 H=30 B=2 L=25000	084.9026.04 OPZWELLENDE DICHTING 2x30MM L=25M JOINT GONFLANT 2x30MM L=25M SWELLING GASKET 2x30MM L=25M SCHWELLENDE DICHTUNG 2x30MM L=25M	CS68-FP		
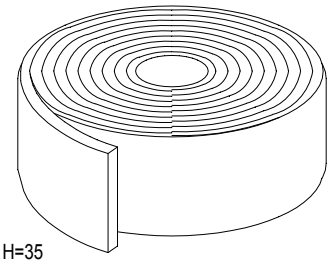 H=35 B=2 L=25000	084.9027.04 OPZWELLENDE DICHTING 2x35MM L=25M JOINT GONFLANT 2x35MM L=25M SWELLING GASKET 2x35MM L=25M SCHWELLENDE DICHTUNG 2x35MM L=25M	CS68-FP		
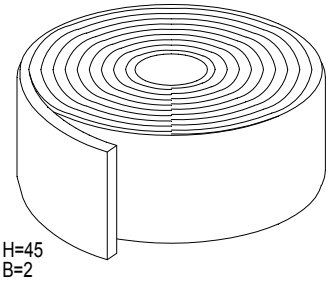 H=45 B=2 L=25000	084.9028.04 OPZWELLENDE DICHTING 2x45MM L=25M JOINT GONFLANT 2x45MM L=25M SWELLING GASKET 2x45MM L=25M SCHWELLENDE DICHTUNG 2x45MM L=25M	CS68-FP		

D0082497

OPZWELLENDE DICHTING
JOINT GONFLANT
SWELLING GASKET
SCHWELLENDE DICHTUNG

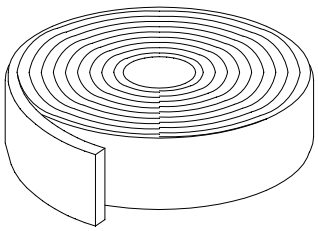 H= 2 B= 10 D= 25000	084.9030.04 OPZWELLENDE DICHTING 2X10MM L=25M JOINT GONFLANT 2X10MM L=25M SWELLING GASKET 2X10MM L=25M SCHWELLENDE DICHTUNG 2X10MM L=25M	CS 68-FP		
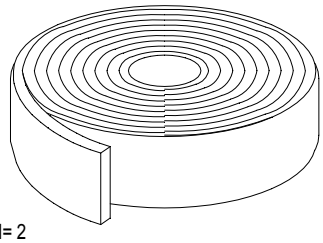 H= 2 B= 15 D= 25000	084.9031.04 OPZWELLENDE DICHTING 2X15MM L=25M JOINT GONFLANT 2X15MM L=25M SWELLING GASKET 2X15MM L=25M SCHWELLENDE DICHTUNG 2X15MM L=25M	CS 68-FP		
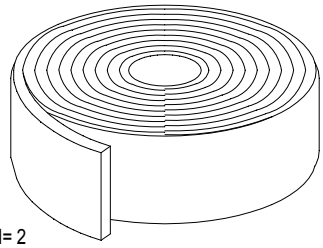 H= 2 B= 20 D= 25000	084.9032.04 OPZWELLENDE DICHTING 2X20MM L=25M JOINT GONFLANT 2X20MM L=25M SWELLING GASKET 2X20MM L=25M SCHWELLENDE DICHTUNG 2X20MM L=25M	CS 68-FP		

D0082498

Reynaers Aluminium

Together for better